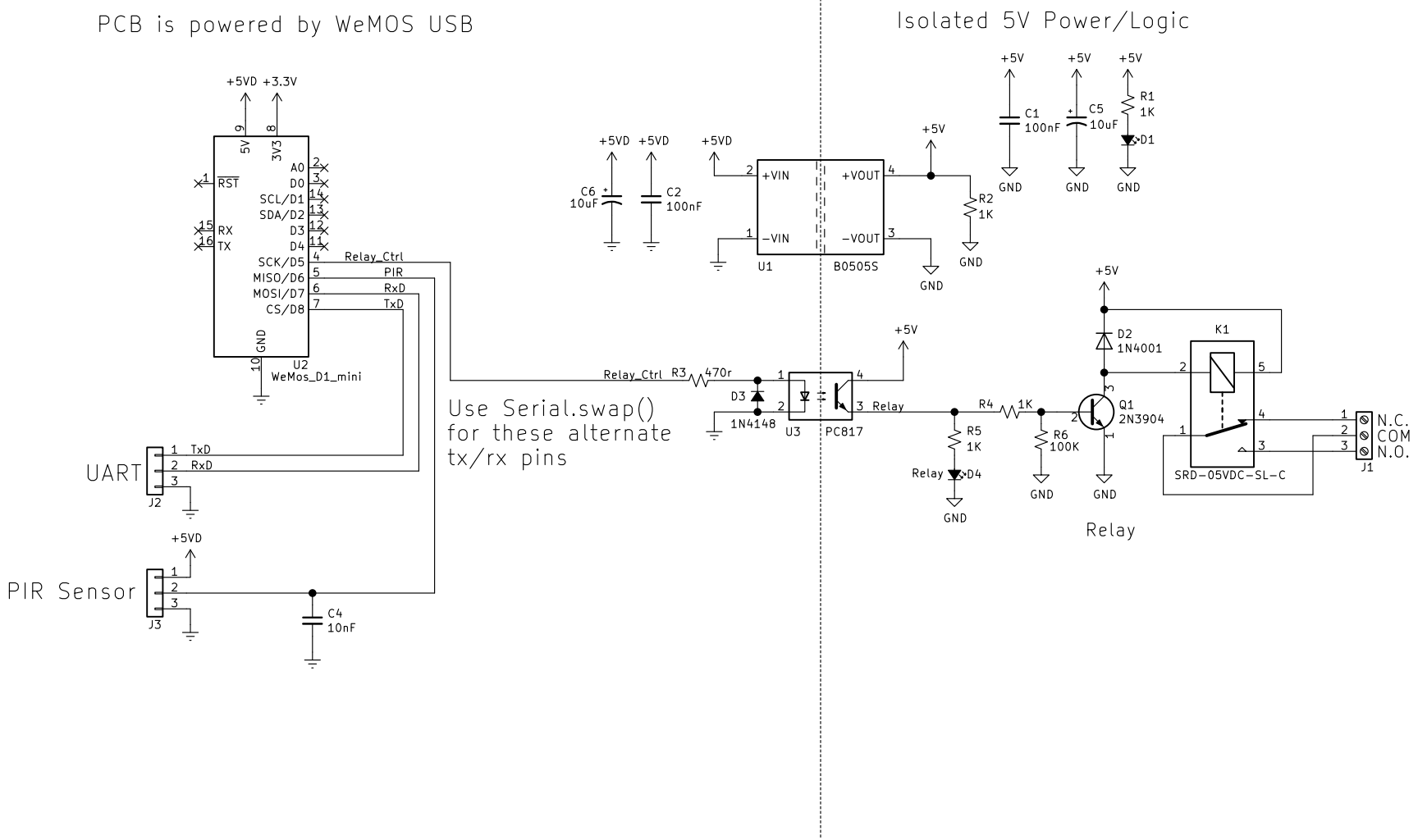


MH1 MH2

MH3 MH4

https://github.com/GadgetReboot/PIR_Relay
https://www.youtube.com/gadgetreboot
**Gadget Reboot**

Sheet: /
File: GR_PIR_Relay.sch

***Title: PIR Relay***

| | | |
|---|---|---|
| Size: A | Date: 2022-12-04 | **Rev: 1.0** |
| KiCad E.D.A. kicad (5.1.2-1)-1 | | Id: 1/1 |