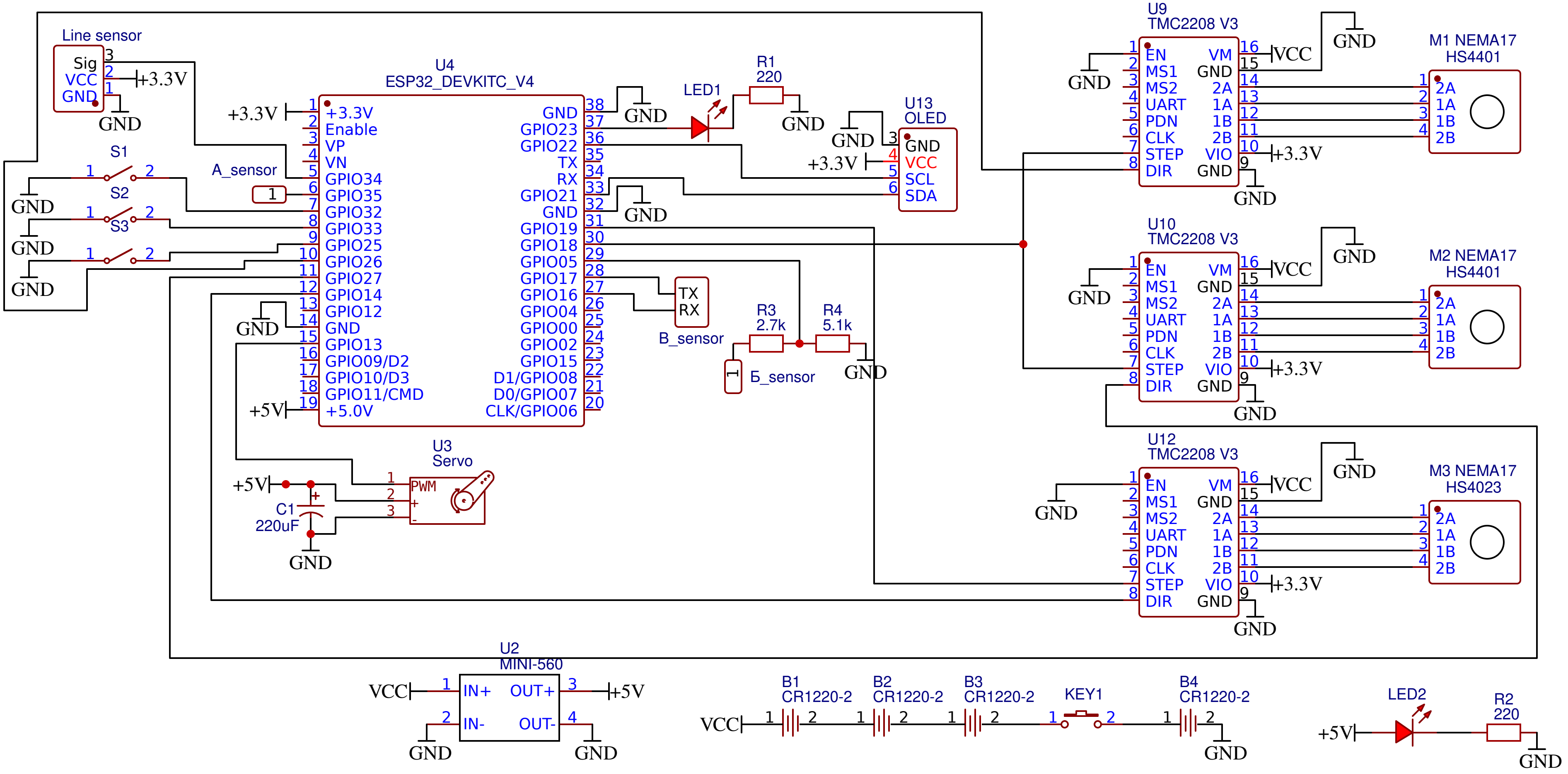
Line sensor
Sig
VCC
GND
+3.3V
GND
U4
ESP32_DEVKITC_V4
+3.3V
Enable
VP
VN
GPIO34
GPIO35
GPIO32
GPIO33
GPIO25
GPIO26
GPIO27
GPIO14
GPIO12
GND
GPIO13
GPIO09/D2
GPIO10/D3
GPIO11/CMD
+5.0V
GND
GPIO23
GPIO22
TX
RX
GPIO21
GND
GPIO19
GPIO18
GPIO05
GPIO17
GPIO16
GPIO04
GPIO00
GPIO02
GPIO15
D1/GPIO08
D0/GPIO07
CLK/GPIO06
S1
S2
S3
A_sensor
+5V
U3
Servo
PWM
C1
220uF
LED1
R1
220
U13
OLED
GND
VCC
SCL
SDA
B_sensor
TX
RX
R3
2.7k
R4
5.1k
Б_sensor
U9
TMC2208 V3
U10
TMC2208 V3
U12
TMC2208 V3
EN
MS1
MS2
UART
PDN
CLK
STEP
DIR
VM
GND
2A
1A
1B
2B
VIO
VCC
M1 NEMA17
HS4401
M2 NEMA17
HS4401
M3 NEMA17
HS4023
U2
MINI-560
IN+
IN-
OUT+
OUT-
B1
CR1220-2
B2
CR1220-2
B3
CR1220-2
KEY1
B4
CR1220-2
LED2
R2
220

1	1

Схема электрическая принципиальная