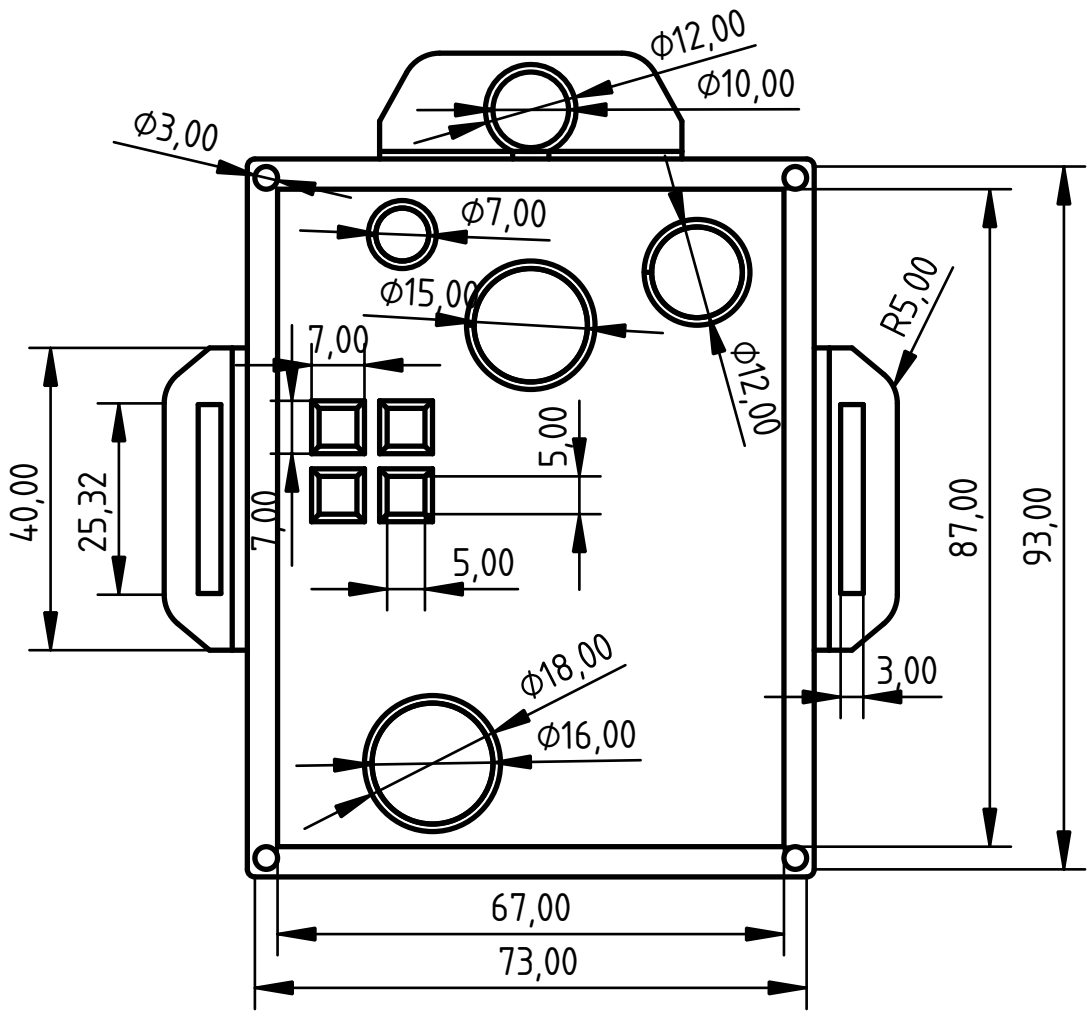

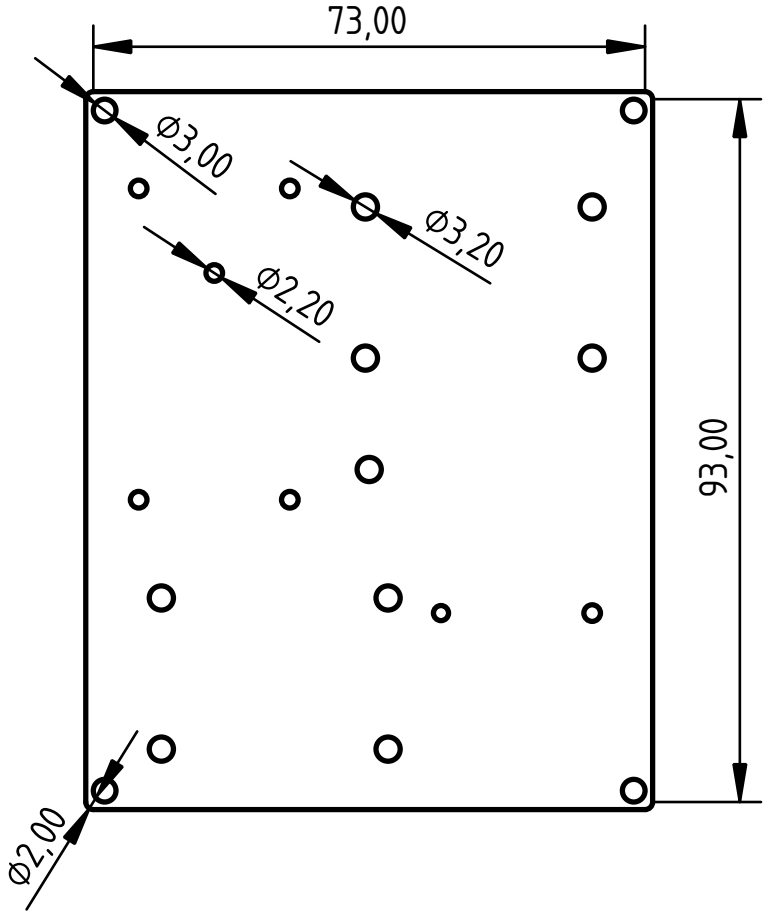

DESIGNED BY: Charbonnier Gaetan DATE: 14/04/2022		Projet Toxicité des fumées Prototype Textile Pièce 1-2	
SIZE A4			
SCALE 2	WEIGHT (kg) ...	DRAWING NUMBER ...	SHEET 1

This drawing is our property; it can't be reproduced or communicated without our written consent.