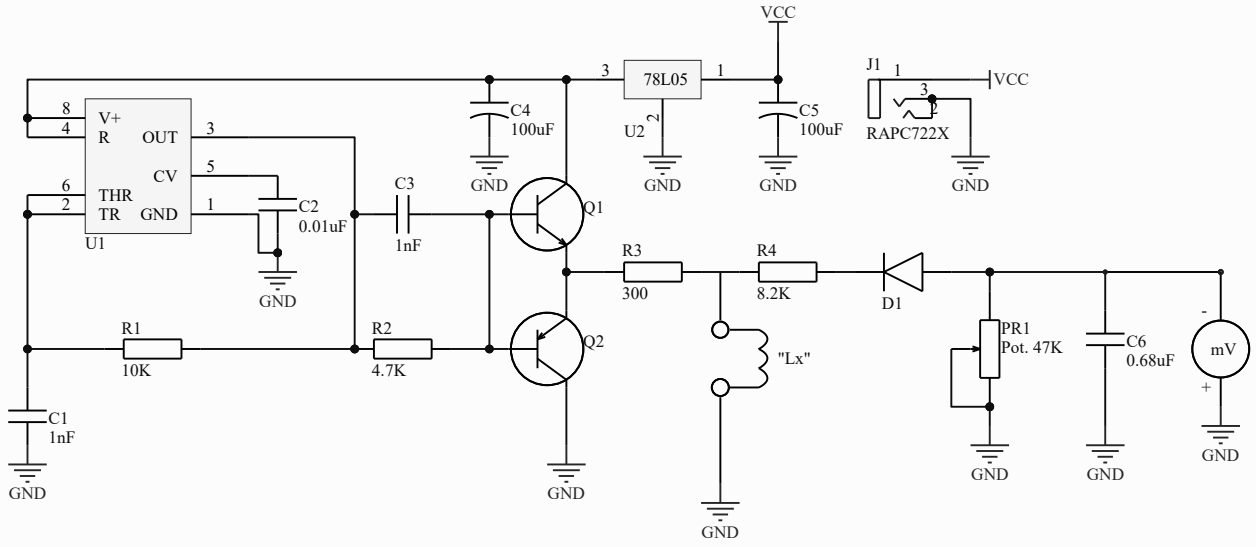

Title	Induction tester on 555-timer	
Size A4	Number	Revision
Date: 8.23.2021		Sheet of
File: D:\SchProj\..\Main.SchDoc		Drawn By: Kyriienko M. O.