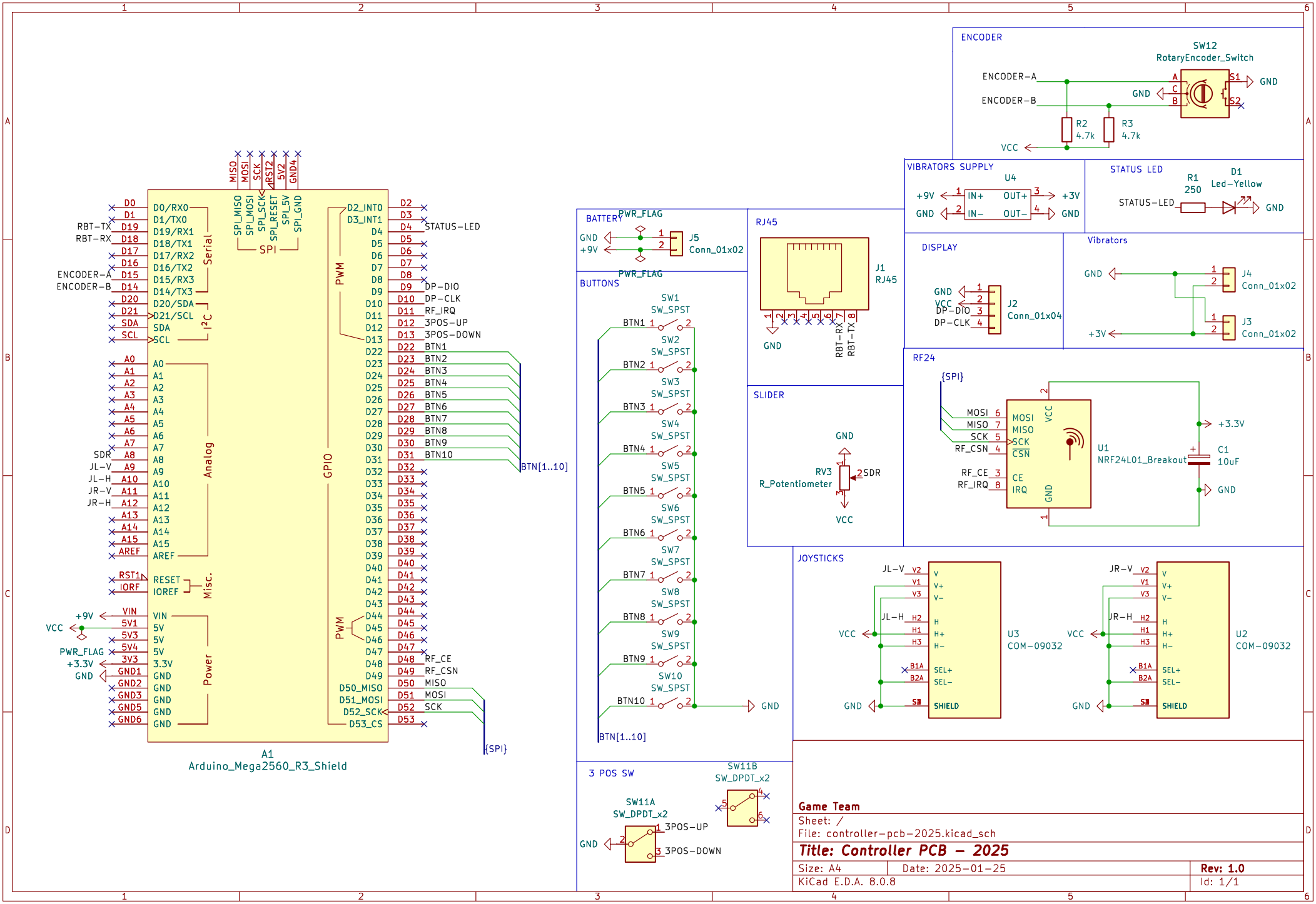
ENCODER
SW12
RotaryEncoder_Switch
ENCODER-A
ENCODER-B
GND
R2
4.7k
R3
4.7k
VCC
VIBRATORS SUPPLY
U4
+9V
GND
IN+
IN-
OUT+
OUT-
+3V
STATUS LED
R1
250
D1
Led-Yellow
STATUS-LED
DISPLAY
J2
Conn_01x04
DP-DIO
DP-CLK
Vibrators
J4
Conn_01x02
J3
Conn_01x02
RF24
{SPI}
MOSI
MISO
SCK
CSN
RF_CSN
RF_CE
RF_IRQ
CE
IRQ
U1
NRF24L01_Breakout
C1
10uF
JOYSTICKS
JL-V
JL-H
JR-V
JR-H
U3
COM-09032
U2
COM-09032
SHIELD
BATTERY
PWR_FLAG
J5
Conn_01x02
RJ45
J1
RJ45
RBT-RX
RBT-TX
SLIDER
RV3
R_Potentiometer
SDR
BUTTONS
SW1
SW_SPST
BTN1
BTN2
BTN3
BTN4
BTN5
BTN6
BTN7
BTN8
BTN9
BTN10
BTN[1..10]
3 POS SW
SW11A
SW_DPDT_x2
3POS-UP
3POS-DOWN
SW11B
SW_DPDT_x2
A1
Arduino_Mega2560_R3_Shield
MISO
MOSI
SCK
RST2
5V2
GND4
SPI_MISO
SPI_MOSI
SPI_SCK
SPI_RESET
SPI_5V
SPI_GND
SPI
Serial
I2C
Analog
Misc.
Power
GPIO
PWM
D0/RX0
D1/TX0
D19/RX1
D18/TX1
D17/RX2
D16/TX2
D15/RX3
D14/TX3
D20/SDA
D21/SCL
SDA
SCL
A0
A1
A2
A3
A4
A5
A6
A7
A8
A9
A10
A11
A12
A13
A14
A15
AREF
RESET
IOREF
VIN
5V1
5V
5V
5V
3.3V
GND
GND
GND
GND
GND
D2_INT0
D3_INT1
D50_MISO
D51_MOSI
D52_SCK
D53_CS
STATUS-LED
DP-DIO
DP-CLK
RF_IRQ
3POS-UP
3POS-DOWN
RF_CE
RF_CSN
MISO
MOSI
SCK
{SPI}
RBT-TX
RBT-RX
ENCODER-A
ENCODER-B
SDR
JL-V
JL-H
JR-V
JR-H
RST1
IORF
+9V
VCC
PWR_FLAG
+3.3V
GND
Game Team
Sheet: /
File: controller-pcb-2025.kicad_sch
Title: Controller PCB - 2025
Size: A4
Date: 2025-01-25
Rev: 1.0
KiCad E.D.A. 8.0.8
Id: 1/1