"INDIRAMMA INDLU "

GOVERNMENT ORDERS, MEMOs & CIRCULAR INSTRUCTIONS

TELANGANA HOUSING CORPORATION

INDEX

sr. No.	G.O. / Circircular/ Lr No.	Date	Subject	Page No
1	G,O.Ms.No.50, Tranpost, Roads & Buildings (RH&C,AI) Deparatment	31-01-2024	Sanction of 15 houses to family members of 15 people who lost their lives in police firing at Indravatly (V) of Aditabad district on 20th April 1981	1
2	G.O.Ms.No.53, Tranpost, Roads & Buildings (RH&C.AI) Deparatment	01-02-2024	Amendment to G.O. 50, dt.31.01.2024 - 15 houses to family members of 15 people who lost thelr lives Indervally in police firing at (V) öfÄdilaFå&distrtct-on - 26th April 1981	
3	G.O.Ms.No.6, Tranpost, Roads & Buildings (RH&C.AI) Deparatment	05-03-2024	Permission to Telangana Housing Board, Hyderabad to raise the loan from M/S HUDCO for an amount of Rss 3000 Crores for construction of (95,235) houses i.e., (57,141) houses in Rural and (38,094) houses In Urban In the state under 6 Guarantees named as INDIRAMMA INDLU and with state Government Guarantee	5
4	G.O.Ms.No.7, Tranpost, Roads & Buildings (RH&C.AI) Deparatment	09-03-2024	Commencement of the New Housing Scheme for construction of houses to the houseless poor families named as "INDIRAMMA INDLU"Guidelines	7
5	Memo. No.9060/M.1(1)/2014	23-03-2024	Sand - Sand extraction TS sand mining, 2015	11
6	Lr.No.2673/TSHCL/E&P/ Gruhalakshmi/2023	06-04-2024	496 houses under Gruhalakshmi scheme which online portal as basement level	13
7	Lr. No. 6687/RH&C.A1/2023	12-06-2024	Considering the 496 houses under the New Scheme "Indiramma Indlu" which were updated online at basement level under Gruhalakshmt Scheme prior to commencement of Model Code of Conduct	
8	G,O.Ms.No.32, Tranpost, Roads & Buildings (RH&C.AI) Deparatment	05-10-2024	Notification for requirement of Aadhaar Authentication of beneficiaries	19
9	G.O.Ms.No.33, Tranpost, Roads & Buildings (RH&C.AI) Deparatment	11-10-2024	Formation of INDIRAMMA Committees at Gram Panchyat/ Municipal ward level for effective Implementation of. the INDIRAMMA INDLU Programme	23
10	G.O.Ms.No,40, Tranpost, Roads & Buildings (RH&C.AI) Deparatment	16-11-2024	Sanction of 863 houses to the land (osers under Kakatiya Mega Textile Park, Warangal under state reserve quota (SRQ) OF INDIRAMMA INDLU Scheme duly relaxing the eligibility criteria-Orders-lssued	25
11	G.O.Ms.No.42, TranpostJ Roads & Buildings (RH&C.AI) Deparatment	16-11-2024	Sanction of 4696 houses to the Project Displaced Families (PDFs) under Mid Manair Reservoir Project @ Rs.5,00,000/- under State Reserve Quota (SRQ) of Indiramma Indlu Scheme duly relaxing the eligibility criteria	29
12	G.O. Rt. No.876, Tranpost, Roads & Buildings (RH&C.AI) Deparatment	16-11-2024	Administrative sanction of Rs. 54.96 crores for construction of Demonstration Houses, Master masons training and constitution of Programme Management Unit (PMUs)	31
13	Lr.No. TGHCL/75187/Production unit/lndjramma Indiu	25-11-2024	Construction of 4, 50,000 houses through beneficiaries	35

Q

14	Lr.No. TGHCL/986/TDHs/Mason Training/NAC/2024	26-11-2024	Construction of Demonstration houses allot 400 to 500 sqr yards space in the office premises	39

O

C)

O

Sl. No.	G.O. / Circircutar/ Lr No.	Date	Subject	Page No
15	Lr.No. TGHCL/986/TDHs/Mason Training/NAC/2024	26-11-2024	Implementation support Mechanism-Construction of demonstration houses, Master mason, training and constitution of PMI-Js	43
16	Minutes of the Video conference held on 05.12.2024	05-12-2024	VC by Managing Director with all PDS	77
17	Circular No 1116/TGHCL/E&P/ INDIRAMMA INDLU/2024	09-12-2024	Survey of Prajapatana applications through Indiramma mobile app	81
18	Lr.No.1116 TGHCL/E&P/INDIRAMMA INDLU/2024	09-12-2024	Survey of verification of Prajapalana applications-5% random check of applications at mandal revets	85
19	Lr.No. TGHCL/986/TDHs/Mason Training/NAC/2024	09-12-2024	Construction of demonstration houses in Rural mandat head quarters	87
20	Memo no. 6375/RH&C.A1/2024	12-12-2024	Rural Houses-dovetailing with PMAY-G-Conduct of field verificatjon of alt Prajapalana 80.54 lakh applications by using Mobile App developed by CGG• Guldelines-lssued	91
21	Memo No 1116/TGHCL/E&P/ INDIRAMMA INDLU/2024	13-12-2024	Conducting Survey through Indiramma Mobile App - Monitoring of survey by the Senior Officrs TGHCL	97
22	Lr.No.TGHCL/75187/Production unit/Supply to Indiramma Indiu/2024	18-12-2024	Construction of 4/50,000 houses through beneficiaries - Establishment of Block making Units by the mahi(a shakti/ youth groups in villages	99
23	Circular No.620/E&P/1NDIRAMMA INDLU/MONITORING/2024	18-12-2024	Formation of state & District level Project Monitoring Unit (PMUs)-Certain guidelinesissued	101
24	Lr.No. TGHCL/986/TDHs/Mason Training/NAC/2024	20-12-2024	Construction of demonstration houses in rural mandal head quarters certain clarifications	105
25	Lr.No.800/TGHCL/PMAY-G/ 202425/24	22-12-2024	PMAY-G-Awass + 2024 survey - complete the process of completion of e-Kyc of all surveyors registered process of surveyor registration	107
26	Circular No 1116/TGHCL/E&P /INDIRAMMA INDLU/2024	23-12-2024	Indiramma indJu mobile app verificatio of applications received under prajapaJana	109
27	Memo No. 582/Genl, C/2025	18-01-2025	Instructions with reference to new ration cards, Indiramma indlu and Indiramma Aatmiya Bharosa	113
28	Circular No 1116/TGHCL/E&P/ INDIRAMMA INDLU/2024	18-01-2025	Mobile app-Verificatjon of applications received under Prajapalana	117
29	Lr.No.2304/TGHCL/E&P/ Centering Units/lndiramma Indlu/2024	18-01-2025	Construction of 4/50,000 houses through beneficiaries - Establishment of Block making Units by the Mahila shakti/ Youth groups in villages	121
30	Circular no. 1116/TGHCL/E&P/ INDIRAMMA INDLU/2024	25-01-2025	Mobile app-Verjfication of applications received under Prajapalana-objections received In Lists 1&2 in Gram/ward sabhas-further instructions issued	123
31	Circular no. 1116/TGHCL/E&P/ INDIRAMMA INDLU/2024 (Telugu)	25-01-2025	Mobite app-Verification of applications received under Prajapalana-objections received in Lists 1&2 in Gram/ward sabhas-further instructions Issued (Telugu)	127

32	Circular No. 1116/TGHCL/E&P/ INDIRAMMA INDLU/2024	01-02-2025	Mobile App - Verification of applications received under Praja Palana - Grounding of houses after according administrative sanctions only	133

C)

C)

C)

C)

C)

C)

C)

Sl. No.	G.O. / Circircular/ Lr No.	Date	Subject	Page No
33	Memo no. 1116/TGHCL/E&P/ INDIRAMMA INDLU/2024	01-02-2025	Implementation of INDIRAMMA INDLUmonitoring- PDS conference on Dt: 0402-2025.	135
34	Minutes of the video conference with project Directors held by Managing Director on dt:12-022025	17-02-2025	Minutes of the Mtng Dt.12.02.2025	137
35	Minutes of the video conference with project Directors held by Managing Director on dt:12-02-	25-02-2025	Minutes of the meeting dt.25.02.2025	143
36	Memo no. 1116/TGHCL/E&P/1NDIRAMMA INDLU/2024	03-03-2025	Implementation of INDIRAMMA INDLUmonitoring- PDS conference on Dt: 07-03-2025 Date of Intimation	147
37	Cr. No. 1116/TGHCL/E&P/ INDIRAMMA INDLU/2024	08-03-2025	Vigilance - Verification of applications through Mobile App - 5% super check by the MCs/MPDOs - Highest rejection during 5% super check - re-verification and action to be injtjated against the concerned - Instructions issued - Re	149
38	Circular No. 1116/TGHCL/E&P/ INDIRAMMA INDLU/2024	09-03-2025	Grounding of houses-Usage of twin pit toilets in Indiramma Indlu and Model Housesinstructions issued	151
39	Circular No. 1116/TGHCL/E&P/ INDIRAMMA INDLU/2024	09-03-2025	Sanction of houses in Phase I- Grounding of houses- Do's and Don'ts- Guidelines	159
40	Minutes of the video conference with project Directors held by Managing Director on dt:25-022025	09-03-2025	Minutes of the Meeting Dt.25.02.2025	161
41	Go Ms No. 33, Transport, R&B (RH&C.AI) Department	22-03-2025	2BHK Scheme - Completion of independent and G+ pattern houses through BLC mode without price escalation - Orders - Issued	165
42	Gol Memorundum No.N11011/3/2025-HFA-IIIUD(9189284)	27-03-2025	Minutes of the 1st meeting of the central sanctioning and monitoring committee(CSMC) for pradhan manthri Awas Yojana 2.0 and 31st meeting of the CSMC for PMAY-U	167
43	Lr No	04-2025	Clarification of colour Codes displayed in approval Services under Indiramma Indlu - Reg	191
44	Circular No. 1116/TGHCL/E&P/ INDIRAMMA INDLU/2024	04-04-2025	Special Projects sanctioned - request to include the Beneficiaries under LI Category in the Inidrammam Indtu App to accord provision for sanction & Grounding the houses.	193
45	Minutes of the video conference held on dt: 02-04-2025	04-2025	Minutes of the Meeting Dt.02.04.2025	195
46	Circular No. 1116/TGHCL/E&P/ INDIRAMMA INDLU/2024	04-2025	Phase II- Selection of Beneficiaries by INDIRAMMA Committees and verification by Mandal Level Gazetted Officers	207
47	Lr.No.3882/TGHCL/1NDIRAMMAIN DLU/MONITORING/2025	-04-2025	Grounding of Houses with more than 600 sft plinth area- Report called for on the eligibility of the beneficiary	213
48	Ir. No: 1116/TGHCL/E&P/ INDIRAMMA Indiu/2024	30-04-2025	Artificla(hike of Material cost and labour charges- Formation of Mandal Level Committes• guidelines	227

○

C)

○

C)

○

C)

C

)

No.	G.O. / Circircular/ Lr No.	Date	Subject	Page No
49	Circular No.TGHCL/986/ TDHs/Mason Training/NAC/2024.	18-05-2025	Construction Demonstration Houses - Use of appropriate Technology - Not to attempt items which exceeds the permitted unit cost - Reg	229
50	Memo No. 3927/RH&C.A1/2025	19-05-2025	Formation of Indiramma Committees at Gram Panchayat / Municipal Ward level and selection of beneficiaries under second phase Instructions -Issued	231
51	Go Rt. No 247, Transport R&B (RH&.C.AI) Department	23-05-2025	Sanction of 877 houses under SRQ to land losers whose land was acquired as per consent/Voluntary Acquisition Award In KodangaJ Assembly constituency in relaxation of eligibility creeria as mentioned in Go Ms.No 7, Dtd.09.03.2024	233
52	Circular No.7706/E&P/2BHK/ 2014	24-05-2025	Completion of independent and G+ pattern houses through BLC mode without price escalation of L 2 applicants - Circular instructions - Reg	239
53	G.O. Rt. No.2S2, Tranpost, Roads & Buildings (RH&C.AI) Deparatment	28-05-2025	Sanction orders of 22016 additional houses to PVTGs and STs in ITDA areas under SRQ	241
54	G.O. Rt. No.253, Tranpost, Roads & Buildings (RH&C.AI) Deparatment	28-05-2025	Nomination of Project officer, ITDA as nodal officer for implementation of Indiramma Indlu Scheme for STS in IT DA areas	243
55	Memo.No.3626/RH&C.A1/2025	28-05-2025	Minutes of Video Conference by Hon t bte CM with District Collectors Dt.27.05.2025	245
56	Lr.No:1116/E&P/INDIRAMMAINDLU /2023	31-05-2025	Requested to take further actjon on sanction of 22016 additional houses to PVTGs and STS in ITDA areas under SRQ	249
57	RC.No:TGHCL/E&P/WGL/2024	02-06-2025	Concerned District collectors requested to conduct interaction with Transgenders and obtain willingness for sanction of Indiramma Indlu	253
58	GEO. Rt. No.259,Tranpost, Roads & Buildings (RH&C.AI) Deparatment	03-06-2025	Roles and duties of Officers Involved in execution and in release of payments for Indiramma Indlu	255
59	Lr.No:1116/TGHCL/E&P/INDIRAMM AINDLU/2024	08-06-2025	Requested to Instruct MPDOs/MCs for thorough re-verification before grounding from L3 to LI	257
60	G.O. Rt. No.779, Tranpost, Roads & Buildings (RH&C.AI) Deparatment	12-06-2025	IAS -Tansfers & Posting orders	259
61	RC.NO. TGHCL/E&P/ Transgenders/202S	14-06-2025	Sanction of houses to transgenders(7077) all districts	263
62	Lr.No:1116/E&P/ INDIRAMMAINDLU/2023	15-06-2025	Sanction of 22016 additional houses to PVTGs and STS in IT DA areas under SRQ - Orders communicated	265
63	Circular No.3882/TGHCL/ Indiramma Indlu/Monitoring/ 2025, dt.16.06.2025	16-06-2025	Photo capture in mobile app documentation and checklist for AE's	275
64	Memo.No.TGHCL/986/TDHs/ Mason Training/NAC/2024	24-06-2025	Construction Of Demonstration and Houses use affordable technologies	277

C)

C)

C)

st. No.	G.O. / Circircular/ Lr No.	Date	Subject	Page No
65	Govt. Memo.No.2691/M.1(1) /2025,	-06-2025	Mines & Quarries Regulation of Sand Mining in I, Il & Ill order Streams - Implementation of Online Transit Pass System - Measures to Prevent Illegal Mining and Transportation of Sand - Reg.	279
66	Lr.No.4165/RH&C.A1/2023, Tranpost, Roads & Buildings (RH&C.AI) Deparatment	30-06-2025	Indiramma Indlu - Relaxation for making payment to houses of above 600 Sft upto Basement Levef In Phase-I pilot villages, subject to obtaining beneficiary consent to restrict the plinth area for further stages Orders Issue - Reg.	287
67	G.O.Ms.No.287, Tranpost, Roads & Buildings (RH&C.AI) Deparatment	30-06-2025	Indiramma Indlu Scheme - Restricting the maxmimum plinth area to 600 sft - Orders Issued.	289
68	Lr.No.4651/RH&C.A1/2023, Tranpost, Roads & Buildings (RH&C.AI) Deparatment	01-07-2025	INDIRAMMA INDULU Scheme - Cancellation of not started houses In pilot villages (Phase-I) after a period of 45 days of sanction orders issued - Orders - Issued - Reg,	291
69	cr. No 1116/TGHCL/E&P/ INDIRAMMA INDLU/2025	15-07-2025	Indiramma Indlu - Eligible beneficiaries who could not be sanctioned because of basement completion .	293
70	TSHCL-ENGG/SCHE/17/2024ENGINEERING SECTION	17-07-2025	Construction of demonstration houses cancellatlon of not started houses	295
71	Lr.No 82075/TGHCL-Engg/5/202SEngg Section,	20.07.2025	Facilitation of Institutional Credit Support for INDIRAMMA INDLU Beneficiaries in Alignment with PMAY-G Guidelines and Rural Development Objectives - Reg	297
72	Lr.No 828231/TGHCL-Engg/6/2025 Engg Section,	21.07.2025	Rural Mason Training (RMT) pogramme under RSETI frame work - Mobilisatjon of wilting Rural youth for Mason Training - Reg	299
73	Lr.No 828368/TGHCL-Engg/ 7/2025-Engg Section,	21.07.2025	Tribal We(fare Department - Utilization of construction units (brick Making , Centring and concrete Mixing) sanctioned by TRICOR in IT DA areas - reg	301
74	LigqOØ3Q4/JGHCLtE&P/iNDIRAMM INDLV/,SÄNP/2024,	24.07.2025	Supply of sand to INDIRAMMA INDLU Housing programme - reg	313
75	Circular No: 1116/E&P/ INDIRAMMAINDLU/2023	26.07.2025	Clearing pendancy at each stage of construction - Instructions to Exepdlte - Reg	315
76	Circular NO: 1116/E&P/ INDIRAMMAINDLU/2023	26.07.2025	Urgent completion of Awas App Date entry by 28th July 2025 - Instructions issued - Reg	317
77	Rc.No.A1/10S/Genl/2026	02-06-2025	Aadhar based attendance	319

C)

C)

C)

C) 0 co

C)

C)

C
)

GOVERNMENT OF TELANGANA
ABSTRACT

T [R&B Department - Sanction of 15 houses to family members of 15 people who lost their lives in police firing at Indravelly (V) of Aditabad District' on 20 th April 1981 Orders - Issued,

TRANSPORT, ROADS & BUILDINGS (RH&C.A1) DEPARTMENT

DEPARTMENT

G.ORt,No.50 Dt:31.01.2024

From the Managing Director, TSHCL/ Hyderabad/ Li%No.1116/ E&P/INDIRAMMA INDLU/2023/ dated 30.012024.

ORDER:

In the circumstances reported by the Managing Director, Telangana State I-lousing Corporation Limited, Hyderabad in the reference citedl

C) Government after careful examination of the matter, hereby sanction. 15 houses to family members of 15 people who lost their lives in potjce fifing at -Indravetiy (V) of AdiJ@bad District on 20 th April 1981 with financial assistance of RsB.00 Lakh each and the same will be part of "Indiramma • Ihdtu ü

Scheme.

2, The Managing Director, Telangana State Housing Corporation Limited, Hyderabad shall take necessary further action accordingly jn the matter i.

(BY ORDER AND IN THE NAME OF THE GOVERNOR OF TELANGANA)

C)

K.S,SREENIVASA RAJU ○

PRINCIPAL SECRETARY TO GOVERNMENT

C)

e Managing Director, Telangana State

Housing Corporation Limited, Hyderabad,

Copy t9

The PS to Secretary to CM.

The ps to M(Rev, Housing I&PR).

The PS to Chief Secretary.

The District Collector, Adllabade

. The PS to Principal Secretary to 'Government.

The PS to Spectal Secretary to Government, .

SF/SC

SECTION OFFICER

/ [FORWARDED •r : BY ORDER/ /

C)

GOVERNMENT OF TELANGANA

ABSTRACT.

T,R&B Department -Amendment to G.O.Rt.No.50, TR&B(RH&C.A1)Dept. Dt.31.01.2024- Orders – Issued.

TRANSPORT, ROADS & BUILDINGS (RH&C.A1) DEPARTMENT

G.O.Rt.No.53, Dt:01.02.2024

Read the following:

1.G.O.Rt.No.50, TR&B(RH&C.A1)dept. Dt.31.01.2024.

2. From the Managing Director, TSHCL, Hyderabad, Lr.No.1116/ E&P/INDIRAMMA INDLU/2023, dated 01.02.2024.

In the circumstances rep.orted by the. Managlng Director, State Houslng Corporation Llrnltedl Hyderabad In the reference 20d• read

C) the above, following Government amendment after to. •careful the Para of GIO 1 st of road the above.matter, hereby IssÜe .

For read	Read ms
the circumstances reported by the anaging Director. / langanä St7te ousing Corpora Wöh Lf•mlted/ yderabbd in the feranca cl:Ved overnment •after ca refu I examination of the matter l, hereby ction 15 houses to mlly rnembers of 15 eople who lost their ves In police fl'rlng at dravelly ('V) Adllabad Dlstrlct on 20th Aprll 1981 financial assistance of •Rsa3,00• akh each and the. same w.lll be part v'Indiramma Inci;lu// Scheme,	[n reported by.' the reference. citéd/ careful matter, hereby san to. family who lost •l'helr Indr.avelly• 1981 with part of

Read as

In the circumstances reported by the Managing Director, Telangana State Housing Corporation Limited, Hyderabad in the reference cited, Government after careful examination of the matter, hereby sanction 15 houses to family members of 15 people who lost their lives in police firing at Indravelly (V) of Adilabad District on 20th April 1981 with financial assistance of Rs.5.00 Lakh each and the same will be part of "Indiramma Indlu" Scheme.

I Stäte

C) of th April of o w!ll be l

C)

2.

C) Hyderabad necessary (vr!her accordlngly In

The Managlng Dlrectqrt Telengana State. Houslng Corporatlon Llmlted shan twke aetjon the matter,

(BY ORDER AND IN THE NAME OF THE GOVERNOR OF TEI*NGÅNA)

K.S.SREENIVASA RAJU,
PRINCIPAL SECRETARY TO GOVERNMENT

To
The Managing Director/Telanga
Houslng Corporation Clmlted/ Hyderebad,

C) Copy to
The PS to Secretary to C,MI .
The PS to Hous(ng & I&PR)
The PS to Chlaf Secretery,

O The Dlstrlct Collgctor, Adllabad,
The PS to Prlnclpal Secretary Government}
The PS to Speclal Secretary to Governméhti s
F/ SC

BY ORDER//

SECTION OFFICER

//.FORWARDED

ABSTRACT

Department — Permission to Telangana Housing Boafdy HYdeEQbad togaise the loan from M/S. HUDCO for an amount of Rs.3000.00 Crores for of (95,235) houses i.e., h6tiSeS Rurål and (38,094) tbé state under .6-Guarn'tees na#ied, as INDIRAMMA INDW and Quarantee —Orders-issuedt

ROAD'S &

bated:R
ead}

& THB, QEIB/2024,

ORDER:

reperced
Hyde?åbaa 3000.00 C?oces as @ for construction Of 95,235 IN'PIRAM•MA •INDLU *Pd. requested, the Government for permitting.' the Telangahä .Höuéjng Board, @cept, the terms and conditionsZCferédb M/S S.SIUDCO and to .aygil, RSßOOO%OO (f FiÜDQQ for of 96,205
(•57,14'1)' houSes -Ruml•. ¹$ld ʳip
also reqfiesced tötSSlåe State qav:ernmépt GUarantee (for.fthe after careful •exargihQtion Of .rnagter% Government hereby the T.,élabgana Housing Béa$d; Hyderabadgo. accept the terms and •conditions, Offeredby U/ s. klUDCQ and .to avail loan for an amount of Rs.8QOODO
Three Thousand Crores only)• and agree to provide Government Guara$teᵗ alone
Wigh the State Budgetary PFé,ViSi'on for its Share 'öf Government for
repayment '0T
Principal Along; with the enti.r,e tenure;
construetion .(95P35) •høusle${in and

Theᵘ Vice & Höll$ixåg Commissioner. Telartg@ila BeardL Hyderabad. shall Cake necessåi$ʳ• ad.uotiiii! agcördinglYA

This order issues She •oriqu•rreme, Of FifiQnce (DᴼM) Depårf$iene: their Ü.O,No.482/74/A1 [DOM/:2Q24, Datedi

(BY,ORDER 3ND GOVERNOR or

The
Hyderabäd,.
The •Managing 'Diieetoml, Litd.,
Copy to:
The Directpr of Tneasu#eS and Hyderabad The. Accountant
Aydeᴾfåbadᵗ.
The P.S..to
The PS to
Thé. PSA
The tö"Pri; Departm•gn.l¹e

GOVERNMENT OF TELANGANA

ABSTRACT

Transport, Roads & Buildjnqs Department Commencement of the New I•Höusinc) Scheme for construction of houses• to the houseless poor families named es "INDIRAMMA INDLU 'I - Guidelines Orders - Issued.

TRANSPORT, ROADS & BUILDINGS (RH&C.AI) DEPARTMENT

G .O.Ms-.No. 7 Dated:09.03.2024

Read the following:

I . Fronn (he Managing Director, Telangana State Housing Corporation Limited, idyderabad, Lr.no.1116/E&P/INDIRAMMA INDLU/23, dc. 18. i 2.2023.

From th nn the Chief Engineer, Telargena State Housing Corporation Hyderabad, Cr.no. 116/E&P/INDIRAMMA INDIA)/23, 2024.

TELANGANA STATE HOUSING CORPORATION LTD. HYD-29. M.D. PESHI 13/3/24

ORDER:

C)

The Managing Director, Telangana State Housing Corporation Lirnited, C) Hyderabad and Chief Engineer, TSHCL. ir the references II st and 2 nd read .

above have submitted the proposal to Government to implement• the New Hausing Scheme for construction of houses by providing financial assistance of Rs.5,00/000/- to each beneficiary and construct 4, 50,000 houses under INDIRAMMA IN DLL)" in Che 'I il phase as a part of 6-Guarantees Progt•amme Abhayahastham @ houses per each Assembly . C)Constituency and the guidelines with a request to issue necessary orders.

2 Government after careful eyarnination of the matter, hereby comrnence the New Housing Scheme for construction of houses to the houseless poor families in the State named as "INDIRAMMA INDLV" as

C) of the Implernentacion of programme under . Abhayahastham by providing financial ossist:anc.e of per house With subsidy and to const-ruct "1150,000 houses in the phase @ . 3,500 houses per each Assembly Constituency. Accordingly, the following . quideline.s are issued for implementation of the "IN DIR AM MA INDLU" under Abhayahastham to the District Collectors in the • District and C) Commissioner, GHMC in GHMC area.

1 . Objective

. Construction of houses for the houseless poor with a filhanc.ial assistance of as. 5,00,00

C) Household having own house sites [nay be considered in II st Phase.

- 4, 50/000 houses will be constructed in the 1 sl phase @ 3, SOO houses per each Assembly Constituency.

11 . Eliqibility Criteria

C) Household should belong to a Below Poverty Line (BPI) family (to be decided baséd on Food Security Card).

- Beneficiary should have an s own site. or site provided by the. Government..
- Beneficiary Should be the cesident of the Village / IJLB.
- Household living in hut / thatched houses / semi-permanent houses (i.e. mud wall, AC sheets, tiled roofs).

C)

- Household Ijvi.ng In rented höLtGQ.
- Sihgle Women / widowers will also be considered.

111. S.el.eqt(on (of villaqes and houses

- Houses allotted to the constituency shall be distributed arnong Grann Panchayats in„proportion Co populal•iot'l of the Gram Panchayat in the Constituency and it shall be approved by the l)istrict Collector in consultation with the District In-charge Minister.

IV. Iype.De$iqh

- Minimum of 4()0 sft houses shall be constructed. I-louses shall be roofed with ACC and shall have kitchen and toilet.

Telangana State Housing Corporation (TSHCC) will rnonitor the implementation of housing sc.hennes through District Collectors/ Corn fm issioner, GHMC.

VI. Neceip.t and Verification of Appligations

- The applications received under PrajaPalana will be considered for Sanctlon of houses.
- •rhe list of l')ousehalcis alreociy identified under SECC wil\ be duly verified.
- Verification for eligibility will be done by I-he l•eams constituted by bistricl' Collectot.
- The eligible list of appücants will be placed before the Granna Sabha / Ward Sabha for its approval,

C) vill san ction Q-f-&QUSß-S

- The house shah be sanctioned in the. name or woman / widower. e)
- The. District Collector irt consultation with the District in-charge Mi.nis.ter will finafize villaoe / IJLB wise number of houses to be sanctioned.

- Thé District Collector will sanction houses to the eligible . beneficiaries approved by Cjrama Sabha.

VIII. Execution

- The ihdividuai sancl;on crders Wiii o e[r] distributec to tine benefic by thé field functionaries designated by the District Collector in village/ ULB.
- Houses shall be constructed in Beneficiary Led Construction (BLC) . mode.
- Thé .construcl'ion of the house shaf! be. physically verifiec! by the. '"Ma.lcer" and checked by the 'S Checker' t.
- The District Collector sha I identify "Makers" at l•hQ villaqe level and "Checker" at Mandal level. The Checker Shali be the Assistant //.3//

E.nqneer / Assistant Executivc Engineer of any Engineering

Deparl•rnents i e. [)anc.hayal•. Raj. Rural Water Supply, Municipal Administration & Urban Developrnent/ Roads & Buildings, Tribal Welfare, School Education, Medical & Health, Ground Water etc. The District Collector in consu}tation with the District Irrcharge Minister will approve I-he list of Ma«ers and Checkers village wise,

- Any detailed operational quidelines for execution will be cornrnunical•ed separaloly.

IX. Payments to beneficiaries

- Rs.s,oo lakhs financial assistance as 100% will be extended to the beneficiary.
- Payments will be made in 4 stages

. Basement level (BL): Rs.1. , 00, 000
. Roof level (Walling-R.L): Rs.1,00,000
Roof casted (RC): Rss2,OOtOOO
C) Completed in all aspects: Rs.i,OOlOOO

CD wise [he District payments Collector raised / by Commissicner,the Checkers GHMC and the will Managing approve the Director,stage

Tetangana State Housing Corporation Limited will release the payments directly to beneficiary e.ccount through Aadhaar Payment Bridge System (APBS) under Direct Benefit [e]rransfer (DB T) mode.

0

3. The Managing Director, Telangana State Housing Corporation Limited/ E•+/derabad shall take necessary action accordingly.

4. This order issues with .the concurrencc of Finance (EBS.X) Department vide their U.O.No.697/1 7/A2/EBS.X/2024/ dl•.os.0'3.2024. .

(BY ORDER AND (N THE NAME OF THE GOVERNOR OF TELANGANA)

K.S.SREENIVASA RAJU ○

PRINCIPAL SECRETARY TO GOVERNMENT

Vfhe Managinq Director, Telanqana State Hc.luslng Corporation Limited/

○ Hyderabad

The All District Collectors.

The Commissioner, Greater Hyderabad Municipal Corporation, Hyderabad

The Mission Director, Mission for Elimination of Poverty in Municipal Areas (MEPMA)

Copy (o:

C) •The P.S. to Secretary to C.M.

The P.S to M (Revenue/ Housing & .1&PR)

C) The PS to C.S.

The PS to Spl.C.S. to Govl., Finance [Dept,

C) The PS to Prl: Secy .to Govt., Planning (Dept.

C) The PS to Pri.Secy to Govt, TIR&B.

The P.S. to Principal Secretary to Government/ MA&UD Department

.The Finance (EBS.X) Department susc.

SECTION OFFICER

//FORWARDED BY ORDER)/

C sub7 $、d e ⅄ a d ㄗ

C) C

1

C)

O

C

0 expresse&by e、

『

C

0

C

0 ic-ijtiated on ,

0

○

O Co : :

c ,

O

O

O

D

0

... D

D

D ID t)*D

TELANGANA STATE HOUSING CORPORATION LIMITED,
H.NO.3-6-184r STREET NO,17, HIMAYATNAGARt HYDERABADw29

Smt.Viziendira Boyi, IAS,
Managing Director,

The Secretary to Govt.,
T/ R&B Department,
Hyderabad.

Lr. No.2673/TSHCL/E&P/Gruhalakshmi/2023, Dt.06.01.2024

Sub:- TSHCL — GruhaJakshmi Housing Scheme - Conduct detailed field enquiry with regard to the following 496 houses under Gruhalakshmi scheme which online portal as Basement Level - Report called for - Reg.

Ref: — 1. Letter No, 6687/ RH&C.A1/2023, dt.30.12.2023 of Secretary to Govt, TIR&B Dept.,.

2. T/o Cr. No. 2673/Gruhalaksmhi/2023, dt.02.01,2024
3. Lr.No, Al/42/Gruhalakshmi/2023, Dt.17.01.2024. of District Collector, Hanumakonda.
4. Cr. No. M&E/946/Gruhalakshmi/2023f Dt.19a01.2024 of District Collector, Warangal.
5. Lr.No. /A/MHBD/Gruha(akshmi/2023, Dt.24.01.2024, dt. 01.2024 of District Collector, Mahabubabad District.

-000-

Please peruse ref. 1 st Cited/ where in the Govtl has requested to conduct a detajted enquiry with regard to the 496 houses under Gruhalakshmi Scheme

○ which were updated online at Basement level prior to commencement of Model ○ Code of conduct.

Accordingly, vide T/o letter ref 2 nd cited/ the District Collectors of Warangal, Hanumakonda and Mahabubbad districts ddressed to conduct a ○ detailed enquiry with regard to the 496 houses under Gruha[akshmi Scheme which were updated online at Basement level prior to commencement. of Model Code of conduct.

Vide ref. 3 rd to 5 th cited the District Collectors of Hanumakonda, Waranga[and Mahabubabad districts have Submitted the detailed verifl.cation repo 'on

496 houses which are at basement level online under GruhaAakshmi Scheme o prior to commencement of Model Code of conduct.

along photos

13

C)

HQvefc.,

District wise details are as follows.

Sli No.	District	No.of houses updated online at BL stage prior to MCC	Present stage of houses on ground as per field enquiry reports						Remarks
			NS				RC	Completed	
									10
1	Warangal	408		169		239			
2	Hanumakonda	45		8	16	18			
3	Mahabubabad	43		21		6	11		
	Total		2	198	18	263	11		

In this regard, it is requested to issue necessary orders in the matter

Encl: 3 7d to 5 th cited

Yours faithfully (

Managing Director

7/2/2024

GOVERNMENT OF TELANGANA
TRANSPORT, ROADS & BUILDINGS(RH&C.A1) DEPARTMENT

Lr.No.6687/RH&C.A1/2023 Dt:12.06.2024

From
The Special Secretary to Government &
Secretary to Government(F.A.C.),
Transport, Roads & Buildings Department,
Telangana Secretariat,
Hyderabad.

To
The Managing Director,
Telangana State Housing Corporation Limited,
Hyderabad.

Madam,

TELANGANA STATE HOUS. CORPN LTD. M.D. PESHI HYD-29.

DEPARTMENT
De 12.06.2024

Sub. T, R&B Department Considering the 496 houses under the New Scheme "Indiramma Indlu/' which were updated ontjne at basement level under Gruha)akshmi Scheme prior to commencement of Model Code of Conduct - Orders - Issued.

Ref:From the Managjng Director / Telangana State Housing Corporation Ltd, Hyderabad, Lr.No.2673/E&P/Gruha)akshmi Scheme/2023,dt:06.0

I am to invite your a'ttention to the reference cited and after careful examination of the matter Government hereby consider the old 496 houses which were sanctioned under Gruhal&lkshmi Scheme and updated on line at basement level prior to commencement of Model code of Conduct under the new'" Indiramma Indiu 'l Scheme.

O 2 The Managing Director, Telangana State Housing CorporatiOn Limited, Hyderabad shall take necessary action in the matter,

Yours faithfully

Ofor Special Se •etary to overnment &

12/6/2024

Secretary to GoVernment(F.A.Cl)

e)

GOVERNMENT OF TELANGANA

ABSTRACT

SCHEMES Notification for requirement. of Aadhaar Authentication of beneficiaries under section 7 of the. Aadhaar (Targeted De$ivery of Financial and Other Subsidies, Benefits and Services) Act, 2016 (Central Act No, 18 of 2016) for implementation of Indiramma Indlu Scheme - Notification - Orders - Issued,

TRANSPORT/ ROADS AND BUILDINGS DEPARTMENT

G.O.Ms.No.32 Dated%05.10.2024

Read the following:-

1. G.O.MS.No.7, TR&B (RH&C.A1) MS.No.7, TR&B (RH&C.AI) department, dated 09.03.2024,
2. From the M.D., TGHCL, Hydera the M.D., TGHCL, Hyderabad, Indlu/CGG/2023,dt:11.6.24. Lr.No.1663/TSHCC/1ndiramma

TELANGANA STATE HOUSING CORPORATION M.D. PESAI HYD-29.

***

ORDER:

Government have issued orders for commencement Of the New Hö.using Scheme for construction of houses to the houseless poor families ih the •State C) named as "INDIRAMMA INDLU" as part of the implementation of 6-Guaranl•ees programme under AbhayahaStha•m by providing financial assistance of Rs.5,00/000/- per house with 100% subsidy vide C.O. first read above.

C) in the The letter Managing second Direct.or, read above, Te;angana has stated Housing that Corporation the Aa•dhaar Limited, .detaifs Hyderabadof the

beneficiary of' Inditannr-na Indlu Scheme shall be collected along with the applicat form for verification of eligibility for the beneficiary whether belongS to resident of the vill•age/lJLB as well as facilitating for release of stage wise payments through APBS (Aadhaar Payment Bridge System), The Managing Diréctor, Telangana Housing Corporation Limited has therefore requested to issue necessary notification

C) as and per Other the Subsidies, provision under Benefits section and Services) 7 of the Aädhaar Act/ 2016 (Targeted (Céntral Act Delivery No, 18 of of Financial2016),

3. Government after careful examination of the matter, hereby order that the individual eligible for receiving the benefit of the Indiramma Indiu Scheme shall furnish proof of possession of the Aadhaar nurnber o.r undergo Aadhaar authentication, C)

4. Accordingly, the following Notification shall be published in an Extra. Ordinary issue of the Telangana Gazette/ Da.ted:05.10.2

NOTIFICATION

Whereas, the use of Aadhaar as an identity document for delivery of services C) or benefits or subsidies simplifies the Government delivery processes, brings in transpareney and efficiency, and enables beneficiaries to get their entitlements C) directly •in a convenient and seamless manner by obviäting the need to p.röduce multiplé documents •to prove one's identity.

C) 2 And whereas, the Transport, Roads & Buildings Department (hereinafter referred to as the Department) i js administering the Indiramma I.•ndlu Sthéme (herein after referred to as the Scheme) as a new housing prograrn (hunched by the Government of Telangana wherein financial assistance is provided co the beneficiaries .for con.sCruCWo.n of house •in their own plats under Beneflciary Led Construction (.BLC)• mode, which •being implemented through •the Telangä.na Housing Corporation Limited (TGHCL) (hereinafter referred to as the Implementing Agency)'

e) 3 , And whereas, under the Scheme, an amount of Rs.5/00,000/- (Rupees Five lakhson)y) per beneficiary for construction of house js provided by the Government in four (4) installments with 100% subsidy (hereinafter referred to as the benefit)

(BPL) families (herein after referred, •to as the Ageney as gui<elines.

Ah-d •WhetéäS/ aforesaiW5chBrne involves recur,eing expenditure 'inturred from thé Consöfidäted• Fund o'f'Telanéä•na State.

Nowvtherefotei. in pursuance (Qf• section 7 of the Aadhaar (Targeted Delivery Of: and Other Subgld•ieg; and Saruiees) A'Ctr 2016 (Central Act No, "t@féfhed} Åé9; +1&G'ö.veFh ᵐent•df TAäBngah a

tot ᴳthéGcferfje.

:bé. pfddf p.ösgessiöå

Or undetgo Aedhäar authehticatlon,

indiVfrduål' d'éSiFoug 8f$@.Väflirvg benefits under the Sc.h'eme, who does •riot the Aadh»ä€t number off/ has not yet enrolled for .Åadhäart shall be. requir.eß

Aa4h@Qr enrolment, before entitled obtain A@dhaaᶜr

øer section 13 Shall, visit atrV

cefitffé :th'é •tjfitqu.@ ᵗide ritificåt,ion

(IYjbAC) Gibbsite to get éhråll)ed for

oftheAagh"r.4En.rolrnent and Update). Régu.lations, 26%fk6 itttplenenting Agency} required offér> Aadb$åt ᴵberseficlä%tles Who ute '90t yet ehfolled for Aadhaat: eése &heré Aatdhaan.åntölmgnt céhtre located/ in the Block or '\éhsilt {he Department through its . Irnplérfietifiˢng "AEe'hcy Ätövide Äadha±äf enrolment . Facillties• convenient. Löca\-tens in. goordi:nätion with the .exiSttt$ig 0B QtA5bⁱ hée6mittgˢ„a U'I%DAt: Registrar themselves:

*Ovfrdedöthät titli the to the 'individual/ benefits under Shall/ bé DKoßåetioh of' tʰ e fiarhély.:

(i) if he has enrolled) his Aadhaar Enrolment identification Slip; and any one documents,

namely:ph•øgo; or ÅdCö*UtxÆ (jji)• öÉ:

Card; •of

(N) Idéhtit% curd;

MäNREGA card; ar

(vit). Kisan• •Photo passbook; pr

(AJijj) Driving license isSüed 'by rthe Licensing Authority under
988
(ix) qgrtificage of

futit.her th at the above document may be checked by .an •Officer sveeffidäily by..d,h-er for •fhat purpose.

order stg. pcöv;iae benefitsr to. %the -beneficlarl'es eonven'léfi)tly; 'th± Depaßttnent ' Agency shäll\ nahke the reqUiiredzrrcangemehVs ensure', 't6%e medi.ä; shill be make. themvåw-ave "Of;th'é said requiremetit.

/ 13/ /

In cases, where Aadhaar authentication falls due to poor biometrics •of the ".eü!efic.iaries or due to any other reason, the following remedial mec.han.isms shafi bc adopted, nat•nely -

(a) In c.aqe of poor fingerprint quality, iris scan face autinent.icdtion factlity shall be adopted for authentication, Ch'eräby thé Department thro.uéh its Implementing A.genc.y shail make provisions for iris scanners 'or face authentication along benefits in seamless m with (109er;prin.t. authentication benefits •for ur manner..

(b) In case the biometric authentication ot successful, through fingerprints or iris -.sCa•ti face. authentication is not wherever feasible and admjgsib!e authentication by Aadhaar• One Time . Password or Time-based One-Ti Password with limited time •validity t as the c:ase may be, shalFbe bffered

(c) in all o!l.ner cas-e.s• where. biometric .or Aödhaar One Time Qr. Time Qa-$.ad% is not Under be. bag.is• Of • authent.icit.y can: Responsa {Q'R) on the Aadhaar 'tetter •and: the• arrangemenV•o'f •/uéder shall be provided. 'at the corive'nl•ent• locations by the Department •through –era its Implementing Agency.

8 In öddltton Co the above, in order ('0 ensure that no bonafide beriefic.:ary under che scheme is deprived of his due benefits, th.e Department 'through ICs Implementing Agency shall foilow the exception handling mechanism as ou(iined in the Office. Memorandum of.. •Pirect Transfer. •Mission, •Cabinet

Secretariat, Government of -India dated• 19th' December 2017.

(BY ORDER AND THE NAMEOF fHE GOVERNOR OFTELANG

C)

Dr.JYOT1 BUDDHA
SECRETARY TO GOV É.RN,M

3 To

.Vbe Commissioner of-Sta.tl•on.ary and Printing, Go:.vec.nment of Telang.an.a« Hyderebad

(With a request to publish Ch•e notification in extraordinary issue of •Telang
Gp?e.tte .and• (-S0)-eo.pj-as of: tbil•s•. department,)

Jf-he Di•r..ectbr.•, Limjted, Hyderabad.

copy .•Vo

The PS' M(Revenue, I?xPR• Housing).

The Law (C) Departmeat. Bf/sc

[V FORWARDZ : : BY ORDER/ /

SECTION OFFICER

C)

C)

GOVERNMENT OF TELANGANA

ABSTRACT

TtR&B Department - INDIRAMMA INDW Scheme - Formation of INDIRAMMA Committees at Gram Panchayat / Municipal ward level for effective implementation of the INDIRAMMA INDLU Programme - Orders - Issued.

TRANSPORT, ROADS & BUILDINGS (RH&C.AI) DEPARTMENT

G.O,Ms.No.33 Dated:11-10-2024

Read the following:

1. G.O.Ms,No.7, (RH&C.AI) Dept., dt.09.03,2024.
2. From the M.D., TGHCL, No: 1116/E&P/1NDIRAMMA INDLU/2023, dt.01.10.2024.

ORDER.

CD

In the G.O.1 St read above, Government have announced commencement

C) of INDIRAMMA to INDLU houseless Programme poor for construction for providing of 4, construction 50,000 new assistance houses in theof

,000/-

1 st phase in the

State

C)

2. Government after careful examination of the proposal submitted by the Managing Director, Telangana Housing Corporation Limited, Hyderabad in the reference 2nd read above have decided to constitute JNDIRAMMA Committees at Gram Panchayat / Municipal ward levei involving local people and other functionaries by the District Collectors and accordingly hereby order all the District Collectors to constitute the INDIRAMMA Committees for implementation C) of INDIRAMMA INDCU Programme with the following composition:

A. Gram Panchayat Level

3. The committees shall discharge the following functions: i.To take up awareness building activities regarding the programme on continuous basis.

ii. To handhold the beneficiaries in taking up the construction of houses.

iij. To act as a committee for Social Audit.

iv, To report to the MPDO / Municipal Commissioner wrongful exclusion of any eligible family or wrongful inclusion of any ineligible family or any other housing related issue.

4. The Manadal Parishad Development Officer / Municipal Commissioner shall submit the names to be nominated on the INDIRAMMA Committees to the District Collector and the District Collectors will (SSI-je orders constituting INDIRAMMA Committees in consultation with District in-charge Minister.

5, Alf the District Collectors are directed to take necessary steps for constitution of these INDIRAMMA Committees by 121h October, 2024 and organize necessary orientation programme at the Mandal / Municipai level for these commlttee members.

i. Sarpanch / G P Special Officer	- Chairman	(BY ORDER AND IN THE NAME OF THE GOVERNOR OF TELANGANA)
ii. Two Women from SHG group	- Members	
iii. Three local persons of the village having interest in developmental activities (at least one member should he from BC and one member from SC/ST)	- Members	Dr,JYOT1 BUDDHA PRAKASH
iv. Panchayat Secretary	- Convener	

B. Municipal Ward level

i. Ward Councillor/ Corporator	- Chairman
ii. Two Women from SHG group jii. Three local persons of the village having interest in developmental activities (at feast one member shoujd be from BC and one member from SC/ ST)	- Members
iv. Ward Officer	- Convener

SECRETARY TO GOVERNMENT

All the District Collectors.
The Managing Director, Telangana Housing Corporation Limited, Hyderabad,

Copy to'

The Municlpai Administration and Urban Development Department.
The Panchayat Raj and Rural Development Department.
The PS to Secretary to CM.
The ps to M (Rev, Housing & IFR) The ps to M (PR &RD)
The PS to C.S.
SC/SF

// FORWARDED BY ORDER/ /

SECTION OFFICER

GOVERNMENT OF TELANGANA ABSTRACT

TR&B Depnrtn[m]tent -a SancClon of 863 houses to the land losers under Kakatiya Mega Textlle Park, Warangäl under State Reserve Quota (SRQ) of INDIRAMMA INDLU Scheme duly reia,xlng the ellglb)llty crlterta - Orders- Issued.

TRANSPORT, ROADS & BUILDINGS (RH&CÄI) DEPARTMENT

GSO.Ms,No.40 Dated: 16-11-2024 Read the followln

1. G.O.Ms.No.7, T,R&B (RH&C-AI) Dept, dt.09.03.2024.
2. From the Collector & D!strlct Mag!strate, Warangal District, Lr. No.G/ 86/09/2016t dated :02.09.2024.
0. From the TGHCL, Hyderabad, Lr.N0.1303/ TGHCL/ E&P/WGL/20247 dt:26.1Q.2024, C) ORDER:

In the reference 2 nd read above, the Collector & District Magistrate, Warangal District has submitted the proposal for sanction of 863 houses under Indiramma Housing Scheme to the land losers under l<akatiya Mega Textile Park, Warangal for constructing their own houses with the grant of Rs.5.00 lakhs each under o the Indjramma matter. Housing Scheme and requested to issue necessary instr.uctions jn

2. In the reference 3 rd read above, the Managing Director, Telangana Housing Corporation Limited, Hyderabad has requested the Government to consider the

C) 863 proposal houses of the under Collector State Reserve & District Quota Magistrate, of INDIRAMMA Warangal INDLU District Scheme and sanction as a specialthe case, subject to eligibility.

C)

3. Government after careful examination of the matter, hereby sanction 863 houses to the land iosers under Kakatiya Mega Texti.le Park, Waranga) under State Reserve Quota (SRQ) of INDIRAMMA INDLW Scheme duly relaxing the eligibility C) criteria prescribed in the G.O,1 St read above as a speciat case.

4. The Ma.naging Director, Telangana Housing Corporation Limited, H'yderabad C) and the Collector & District Magistrate, Warangal District shall take necessary action in the matter.

(BY ORDER AND IN THE NAME OF THE GOVERNOR OF TELANGANA)

Dr, JYOTI BUDDHA PRAKASH
SECRETARY TO GOVERNMENT

C) To
The Managing Director, Tejangana Housing Corporation Limitedl Hyderabad,
O The Collector & District Magistrate, Warangal District, Copy to:
C) The PS to Secretary to C.M.
. The ps to M(Housing). C)
The PS to C,,S,
The PS to Secretary to Govt.t Housing Department.
The PS to SpJ.Secy to Govt., Housing Department. SF/SC

//FORWARDED BY QRDER//

SECTION OFFICER

Q)

TELANGANA STATE HOUSING CORPORATION LIMITED, HYDERABAD-29

H.NO.3-6-184t STREET NO.17, HIMAYÅTNAGARf

V. P, Gautham, I.A.S.,
Managing Director,

The Secretary to Govt. (H
Transport, Roads & Buildings, Dept., Te(angana Secretariat? ... Hyderabad,

c, o, 1303

E&P/WGL/2024,dt.26.10.2024.

W 202

Sub - TGHCL- Warangal District Proposal for sa'hction of

•Sir,

863 fndiramma Houses under Inditarnma :tndlu scheme to the Land losers due to land acquisition for developmental activities of Kakatiya Mega Textile C) Park, Warangal District Report called for - Reg.

Ref: 1. No. G/B6/09/2016, Dt02.08,2024 of the Ostrict Collector, Warangal Dist. Addressed to tha Chief Secr.etaryr Housing received thröU9h.CSP No. 12656/CSP/2024J bt..05.09.2024)

2. Lr.No. 6203/RH&C.A1/20241 Dt.12.09,2024 of the Spl. Secretary to Govt (Housing)? T/R&B Dept.

-000o Please peruse ref. 2 nd Cited, where in the Govt, duly enclosing the District Collector I Warangat proposal for sanction of 863 houses under Indjramma Housing Scheme to the land 'losers

J) Mega Textile Park, Warangal for constructing their under Kakatiya

C) Houses with the grant of Rs.5.00 lakh each un'der Indiramma Housing Scheme, requested to examine and furnish report to Govt for tak(hg further necessary action.

In ..this. regard(It is submltted that the. •District •Collectora

C) Warangal has submitted' the pho.posafs for based the On -land the. losersuri<erof Hon'ble Chlef Minister of Telangaoa C) Kakat!ya Mega Textile Park/ Warangat.

C)

Therefore, it ts requestéd to consider the proposal and sanction the 863 houses under SRQ of iNDiRAMMA INDLU Scheme as a special •caset subject to eligibility.

Encl: as above

Yours
Sd/-Dt
Manag

// Attested //
28/10/24
Supdt. Engineer (P)

Yours faithfully t
Sd/-Dt.26ÆOi2024
Managing Di+eetor

{3

GOVERNMENT OF TELANGANA
ABSTRACT

T R&B Department Sanction of 4696 houses to the Project Disptaced Famlties— (PDFs) under Mid Manair Reservolr Project w(th @ Rs.5,00,000/- under State Reserve Quota (SRQ) of INDIRAMMA INDLU Scheme duly relaxing the eligibility criteria - Orders— Issued,

---

TRANSPORT/ ROADS & BUILDINGS (RH&CeA1) DEPARTMENT

G.O.Ms.No.42 Dated:16-11-2024

Read the followlng:

1. G.O.Ms.No.7, T,R&B (RH&C-AI) Dept, dc-.09.03,2024.
2. From the M.D., TGHCL, Hyderabad, Lr.No.1899/TGHCL/E&P/Rajänna Sirlcillä-M(d Mänalr/20241 de16.11.20

C) ORDER:

In the reference 2nd read above, the Managlng Director, Telangana Housing Corporation Limited, Hyderabad has stated that the Collector & Distrlct Magistrate, Rajanna Sircilla District has informed that totally (10,683) Project Displaced Families (PDFs) under Mid Manair Reservoir project have been provid.ed with. house-sites in (12) vlUages including hamlets under R&R package. Out of the above said PDFs, 5987 beneficiaries constructed houses and remaining 4696 beneflclarles not CD having own hous'es and requested to sanction 4696 houses under •I'NbIRAMMA INDLU SCHEME for the remaining land loserS/PDFs who are yet •to Construct houses.

2. The Managing Director, Teiangan•a Housing Corporation Limited, Hyderabad has therefore, requested the Government to consider the proposal of the Collector & District Magistrate, Rajanna Sircilla District for sanction of 4696 houses to the Project Displaced Families (PDFs) of Mid Manair Reservoir Project with @ 0,000/- under State Reserve Quota (SRQ) of INDIRAMMA INDW Scheme from the State Government funds as a special case, duty relaxing the eljg:lbllity CO criteria as prescribed in. G.O.1 St read above, wherever required.

o 3. Government after careful examination of the matter, hereby sanction (4696) houses to the Project Displaced Families (PDFs) of Mid Manair Reservoir Project with @ Rs.5,OOiOOO/- under State Reserve Quota (SRQ) under INDIRAMMA INDW Scheme duly relaying the eligibility criteria prescribed in the read above / wherever required, as a special case.

4. The Managing Director, Telangana Housing Corporation Limited, Hyderabad

C) and action the in Collector the matter.& District Magistrate, Rajanna S(rcilta District shall take neoessary

(BY ORDER AND IN THE NAME OF THE GOVERNOR OF TELANGANA)

Dr. JYOTI BUDP.HA PRAKASH
SECRETARY TO GOVERNMENT

To

C) The Managing Director, Telangana Housing Corporation Limited/ Hyderabad, . The Collector & District Magistrate, Rajanna Sirci}la District. C) Copy to:

The PS to Prl. Secretary to C.M,, O

The PS to M(Housing)

The PS to CS.

The PS to Secretary to Govt. / Housing Dept. The

PS to Spl,Secy to Govt., Hous(ng Dept.

SF/SC

//FORWARDED BY ORDER]/

SECTION OFFICER

1977
21/11/24

Г,R&B Department - Administrative sanction of Rs.54196 Crores for construction of Demonstration Houses, Master masons training and Constitution of Programme Management Un!t (PMUs) Accorded _Orders - Issued.

TRANSPORT, ROADS & BUILDINGS (RH&C,A1) DEPARTMENT

G,O,Rt,No.876 Dated: 16,11,2024

Read the follow the tallowlng; e

1. From the M;D., TGHCL/ Hyderabad/ TDHs/ Mason Training/NAC/2024,
2, BRO No,1513t Finance (EBS.X) Department/

C)

In the reference 1 st read above the Managing Director / Teiangana Housing Corporation Ulmlted, Hyderabad häS submitted the following proposaVto Government and reqüested to Issue Adminlstratlon sanction Q of State Share of Rs,54196 crores, .

a) Constructlon of 500 Demonstratjon houses and res sanctioning budget for Rst25;00 Crores er masons at NAC and
b) Tra.lnlng of (5000) master sanctlonlng budget . for Rsü.SO crore$i
c) Constltutlon Of• Ptogramme Management Unlt (PMUs) at State level/ Dlstrlct leve$ and Mandal 'level ind sanctioning budget for Crores,
d) All the above (3) components put together budget Rs,120.16 crores of whlqh PMAY,G central sharé éR5165!20 Crorest State share Rs.54t96 Crs,

O

2. In the reference 2n4 read above(the Finance (EBS,X) Department has Issued BRO for an amount of Rst54.96 crores under the scheme PMAY (Rural) from the BE Provlslon 202+25 under the Head of Account

GOVERNMENT OF TELANGANA
ABSTRACT

C) 3 , In pursuance of,the orgers. Is;ved In .ri.qggppgq 2 Pd and after careful examination of the. hérebV öccord Adrnlnl$ratlve.sqnct)on for under the scheme PMAY(Rüfäi) from the" pt'E v PtoV.lélqrF'202425- under the Head of Account 2216Y03 v 101-12 v 06-310 Y 312. .

4 . The Assistant Secretary tq:: Goy.ernmqnt s and Drawing and (OP-Clalms)

C)Department Disburslng Officer Is requested (Transport/ .Ø •Roads 4. Pplid.lngsthe above • amount through online In favqur of Tela_ngana State Houslng Corporation LImlted;Hyderabad,

(3

//2// C)

5. The Transport/ Ad'äds & Buildings (OP-Clalms) Secretariat Department telängana Houslng Corporation Llrnited, Hyderåbad necessary actlön tn the matter accordlnglYR

(ay ORDER AND IN THE NAMÉ OF THE GOVERNOR OF TELANGANA)

Dr. 3YOTi BUDDHA PRAKASH
SECRETARY bro GOVERNMENT

Transport/ Roads & Buildlngs (OP-Clalms) Secretariat Department, Hyderabad.
The Managing Director, Telangana Stäte Housing Corporation Limited, Hyderabad. The Commlssloner, Weaker Sectldh Housing Programme, Hyderabad. C)

CQäy to

The Pay and Accounts Offlcer, Telangaria,- Hyderabad,
The Director of Treasuries änd Accounts4 Hyderabad,
The Accountant General/ telangana, Hyderabad,
The Finance (EBS.X) Departmenti . SF/SC

//FORWÅNDEb BY ORDER/ /

SECTION OFFICER

Estimates 2024-25 - Budget Release Order for Rs. 54,96,00,000/- to WEAKER SECTION HOUSING PROGRAMME Orders - Issued,

---

FINANCE (EBSX) DEPARTMENT

Dated: 06-11-2024

Bead-the-fQâlQ.ui-ngz

G.O.Ms.No.S9, Finance (BG.I) Department, dt. 30-03-2001

G.O.Ms.No.86, Finance (BG) Department, dt. 31-07-2024
TR&B.C.No. 5703/RHCC/A2/2024, dt. 11-09-2024
Finance Dept. C.No. 63/A2/Fin(EBS.X)Dept., dt. 04-10-2024

Plnance (BC) Department, dt, 31-07•2024

Finance of the case Order for a ving schemes

a schemes an orders 54,96,00,000/- (Fifty Four Crore Ninety Six Lakh Only) amount issued of Rs. tn references read above, the u-EAKa.*C-t.lQN-H-QV-SJNG2RQGRAMLE Scheme From the is hereby BE Piovision Issued a Budgetunder

(Rss in Lalchs)

No	Head of Account	Charged/ Voted	Provision In BE 2024-25	Additional Amounts Sanctioned	Amounts Reappro -priated Authorized	Total Provision In BE 2024-25	Amount Already Authorised	Amount Authorised Now	Balance Amount Available
Scheme Name: Pradhan Mantri Awas Yojana(Rural)									
Procedure of Drawl of Funds: Grants-in-aid Bill									
Drawing Officer: concerned DDO									
Remarks: SNA ACCOUNT NO: 020112010000395 UNION BANK HIMAYATNAGAR BRANCH IFSC CODE UBIN0802018									
	2216-03-101-12-06-310-312	V	377,35,28	0	0	377,35,28	0	54,96,00	322,39,28
Total BRO			377,35,28	0	0	377,35,28	0	54,96,00	322,39,28

The (HOUSING DEPARTMENT, SECRETARIAT DEPARTMENT), Shall take necessary action for issue of administrative sanction as per instructions issued in U.O Note No. 29875-A/1283/A1/BG.I/2006, Finance (BG.I) Department, dt.25.11.2006 .

BYORDER AND IN THE NAME OF THE GOVERNOR OF TELANGANA)

D BHASKAR

GOVERNMENT OF TELANGANA
ABSTRACT

SPECIAL SECRETARY TO GOVERNMENT

he SING DEPARTMENT, SECRETARIAT DEPARTMENT
KER SECTION HOUSING PROGRAMME
Director of Treasuries & Accounts, Telangana, Hyderabad
Director Works and Accounts, Telangana, Hyderabad
Pay & Accounts Officer, Telangana, Hyderabad
Accountant General, Telangana, Hyderabad
Reins(Budget Computers)
Finance (BG) Department
C.

// FORWARDED BY ORDER //

SECTION OFFICER.

33

he Director of
Director Works
Pay & Account!

he Finance (BC)

C)

e)

File No.TGHCL-ENGG/SCHE/22/2024-ENGlNEERlNG SECTION

TELANGANA STATE HOUSING CORPORATION LIMITED,

H.NO.3-6-184, STREET NO 17 H!MAYATNAGAR HYDERABAD-29

F rom
Sri V P Gautam, I.A.S
Managing Director

1. The Commissioner
SERPt Hyderabad z.
2. Director, MEPMA z
AC gaurds, Hyderabad

Lr No.TGHCL/75187/Production unit/Supply to Indirammma Indlu/2024

25/11/2024

C) Sir,

C) Sub: INDIRAMMA INDLU- Construction of 4,50,000 houses trough
C) beneficiaries- Establishment of Block making Units by the Mahila

Shaktl/ Youth Groups in Villages/ Towns- Scheme - communicated for wide publicity and implementation- Regd

Ref: Go MS no. 7) dt 09.0312024 of dept (RH&C.AI) Dept., Govt., of Tetangana.

I invite kind attention to the Subject and reference cited above. The Govt has announced commencement of INDIRAMMA INDLU programme to construct house to all the houseless families in the State over a period of 5 years and announced construction of houses in the first year at a unit assistance of Rs 5,00,00/- per house with 100% subsidy. It is a continuous program for next 5 years and houses will be sanctioned in almost alt the villages/ Towns.

For the construction, Bricks are the essentially required material for construction, It can be seen that the availability of county bricks has come down and become scarce. Further it is also not advisable to go for production of clay o bricks to safeguard the nitrogen rich top soils used in making the clay bricks. It becomes imperative to go for other alternate material like manufactured -Fly ash/ sand cement blocks for construction of the houses.

Each house under the INDIRAMMA INDLU scheme require around 2200 CH CLEkK,

File No.TGHCL-ENGG/SCHE/22/2024-ENGINEERING SECTION

blocks of size 12"x8"x6" and one Block making Unit will be able to produce blocks required for one house. It is proposed to take up 2800 house in each Mandal/Municipality in the State in next 3 years or to construct 80 houses every month, Hence, there will be a huge demand for such cement/fly ash bricks.

Hence, It becomes necessary to arrange facilities for continuous supply of Fly ash/ Sand cement blocks in every village/ Town, In order to augment the supply it becomes necessary to establish at least 3 Units per Mandal/ a Municipality,

A scheme for establishment of Biock making Units is communicated here with for wide publicity and sensitizing and encouraging the Mahila Shakti groups/ Youth groups to establish the Units.

C)

The proposed cost for establishing a production Unit is @ Rs 18 lakhs. it is

C) estimated that the Unit can recoup the investment along with interest and overheads within 2 years of establishment with a simple margin of Rs 2/ per block on the production cost (Rs.2*2200 blocks*25days*24 months= Rs C)

26,40,000/-).

Signed by VP GAUTHAM
Date: 25-11-2024 14:05:
Reason: Approved
VP GAUTHAM, MANAGING

DIRECTOR-TGHCL, MANAGING DIRECTOR 0/0 TGHCL

Director Of Municipal Administration

Copy to all the District Collectors for necessary action in the matter,
Copy submitted to Secretary to Government(Housing).

e)

C)

SCHEME FOR FLY ASH BRICK MAKING UNIT

Objective: Installation of Brick making unit to produce bricks" using Fly ash, Cement and Crusher dust.

Requirement of bricks for Indiramma Indlu house:

2250 bricks of size 12"x8"x6 and 12"x8"x4" required for any building construction

Production capacity of Machine : 2400 bricks /day

Expected demand for INDIRAMMA INDLU program :

- 20,00,000/700= 2857 houses per Mandal/Municipality in 3 years or 80 houses per month .
- One Machine can supply bricks required for one house per day.
- One Machine can have work for 25 days a month and supply bricks required for 25 houses per month.
- 3 Units are required per Mandal/Municipality to meet the demand of INDIRAMMA INDLU program

Machinery & Equipment	Multi block making Machine, Motor, trolly, Moulds, anoillaries , etc	Rs. 6.00 lakhs
Infrastructure	Paving and drying platform of size 80'x 50', Store room, open yard for raw materials, power connection ,etc	Rs 6.00 lakhs
Mini Truck	For transport of raw material and supply of bricks to beneficiaries house site	Rs. 6.00 lakhs
Total Investment required		Rs.18.00 lakhs

Minimum men/women workers to be engaged: 8 for mixing, operating machine, stacking, security and transportation

Operationability: Equipment can be handled by any literate with one day training. Equipment can be repaired by local mechanics

Contd., page 2

Business model:

- MantB.gedt\bySø1f Helpsqtöuphäfldshålded bysbR?/MEFMA
- Operated by an entrepreneur/ literate Construction worker/ Mason engaged!in construction activity, preferably a member or spouse of the SHQ member
- Assure Market of INI MA INNDLU program within the village/ Town or in villages 10km and regular constructions in the village/Town Market ot
- Proposing 3 units per Mandal/municipality
- Supply rate of bricks fixed by the Housing Engineer/MDO/Mpl Commissioner to mee of initial investment (to recover in 3 years) +raw materials, labou the working profit of entrepreneur.

INbI*.AMYLA

%flthln

each:

to•bb

4tnee# qøst

a.tid the

TELANGANA HOUSING CORPORATION LIMITED, H.NO.3-6-184,
STREET .NO 17, HIMAYATNAGAR, HYDERABAD-29

Prom:
Sri. V.P Gautham, I.A.S.,
Managing Director

To
All the District Collectors
In the state of GOT

Lr no. TGHCL/ 986/ TDHs/ Mason Training/NAC/2024} Dated:26- 11-2024

Sir/ Madam,

Sub: TGHCL- Govt., "INDIRAMMA INDLU" - Construction of Demonstration houses allot 400 to 500 sqyards space in the office premises of MPDOs — Reg:

Ref: 1)Govt., Ms no. 7 dated. 09.03.2024 of Transport, Roads & Buildings (RH&C.AI) Dept. Govt., of Telangana.
2)G.O.Rt no.876 dated. 16, 11.2024 of T, (RH&C.AI) Dept.
3)Lr no.5703/RH&C.A1/2024 Dated. 16.11.2024 of Secretary to gov. , T, R&B (RH&C.AI) Dept.

C) It is to inform that the Govt., of Telangana vide Govt., G.O.Ms C) no. 7 dated. 09.03.2024, has Commenced new housing Scheme for construction of 4.50 lakhs in the 1st phase houses to the houseless poor

C) families in the State under "INDIRAMMA INDLU'* programme by providing financial assistance of Rs.5.00 lakhs per house vhth 100% subsidy.

In order to achieve the "INDIRAMMA INDLU "programme, the Government vide G.O.Rt. no.876 dt.16.1.1.2024 has accorded administrative sanction for construction of 500 Demonstration houses at the unit cost

O proposed by the State Govt., Rs.5,00,000/- using cost appropriate technologies. These houses are proposed to be taken up ih premises of MPDO Office, with the following objectives:

- Demonstrate constnacting Model houses focusing on space planning with in 400 sft, adopting with low-cost innovation technologies and specifications appropriate to the local context.
- Facilitate opportunity to other masons and beneficiaries to understand house designs available with respect to spaces) light, ventilation, type of finishing, etc.
- The beneficiaries will get a clear idea of the cost of construction and C) adoption of innovative low-cost technologies / materials.
- These Model houses be utilised subsequently as the offices of the

C) Asst. Engineer (Housing).

Contd.,

e)

C)

It is proposed to construct these Demonstration houses involving Masons (TOTS) being trained in NAC / NIRD, These TOTS will subsequently train other masons at Village level.

In light of the above, all District Collectors are requested to identify and allocate 400 to 500 square yards of space within the office premises of the Mandal Headquarters of the MPDOs within 10 days to start construction of these Model Houses.

The matter may be treated as "URGENT'.

Yours faithfully (01

Sd/- dtd.26.11.2024

NLANAGING DIRECTOR

/ / Attested /

SUPERINTENDING NGINEER

(Schemes) 3-

TELANGANA HOUSING CORPORATION LIMITED,
-6-184, STREPT NO 17, HIMAYATNAGAR, HYDERABAD-29

From:
Sri, V.P.Gautham.
I.A.S.,
Managing Directör

To
The Dy. Director General
Ministry of Rural development
Krishi Bhawan , New Delhi-

Letter no: TGHCL/ 986/ TDHs/ Mason Training/NAC/2024, De 26-11-2024

Sir,

Sub: PMAY-G- Telangana- Implementation support Mechanism Construction of Demonstration houses, Master mason, training and constitution of PMUs — Reg:

Ref: 1)Frame work for implementation of PMAY-G guidelines.
2)Oovt., GO.Ms no. 7 dated. 09.03.2024 of Transport, Roads C) & Buildings (RH&C.AI) Dept, Govt., of Telangana. .
3) Govt., G.O.Rt.No,876 Dated. 16.1 1,2024 of Secretary to Govt., (RH&C.AI) Dept.
4) T/ o letter no even dated. 04.09.2024 (proposal submitted to Govt.)

.The Govt., of Telangana vide G.O. Ms no. 7 dated. 09.03.2024, has Commenced a new housing Scherne for construction of Houses to the houseless C) poor families in the State under "INDIRAMMA INDLU" programme by providing financial assistance of Rs.5.OO lakhs. It is proposed to dovetail the PMAY-G support of Rs.O.72 lakh as central share to all these houses

0 It is proposed to put in place the following Implementation support Mechanism:

I) Construction of 500 Demonstration houses of 400 sqft one at each Mandal headquarters at unit cost of Rs. 5.00 lakh to demonstrate the cost effective area specific technologies.

Il) Training of 5000 Master masons at National Academy of Construction/ NIRD, C) Hyderabad in cost effective eco-friendly technologies.

Ill) Constitution of Programme Management unit (PMUs) at state, District and C) Mandal level for monitoring of PMAY-G programme including Training and Construction of Demonstration houses.

Contd.,

e)

I. Demonstration Houses:

The PMAY- G guidelines promotes construction of Model houses at Block / Mandal with the technologies specific to local context.

The cost components allowed under the scheme are: C)

a. Professional Fee for PIA : Rss 80,000
b. Construction Cost c, Miscellaneous expenditure : Rs.1,40,000 for information board} lamp post, veranda and rain water harvesting Rs, 50 000 C)

Total Rs.2f70,000

62.000Central + State share)

Cost for construction of 500 Model houses Rss 25.00 Crores PMAY-G Central Share @Rs.1.62 lakh /house Rs. 8.10 Crores
PMAY-G State Share @ Rss 1.08 lakh / house Rs. 5.40 Crores
Addl. State share @Rs.2.30 lakh / house 11.50 Crores

Il. Training of Master Masons at NAC: C)

Training Of the Master masons is proposed in phased manner @1000 masons per year. Every year it proposed to train 2 to 3 Master trainees from each per Mandal. It is proposed to impart Training to selected masons as master masons (level 4) at National Academy of Construction Hyderabad and in its district units / at Rural Technology Park, NIRD, Hyderabad.

a. No, of Master masons to get trained / year 1000 b, No, of days of training 06
c. Batch size 25 to 30 persons
d. Course fee including Boarding and Lodging Rs.5,000/- per Candidate

Cost of training for 5000 masons in 5 years Rs.2.50 Crs.
Central share (60%) . Rs,1.DC crs. State share (40%) : Rs.1.00 Crs.

Ill. Constitution of Programme Management Unit (PMU8) at State, District, and Mandal levels :

Govt., of India in its frame work of PMAY-G guidelines at Para 7.3 have issued pattern of PMUs and their structure. Accordingly the Govt., of Telangana have permitted for constitution of PMIJs . page 3,

The following are the constitution of PM Us at State / District/ Mandal levels for next 5 years of project period,

Contd.,

AB envisaged by PMAY-G Guidelipeg	Proposed Cadre of persom
1. State Level PMU	
1. State Nodal Officer - Head PMU.	Rtd. CE on contract.
2. Technical Expert in the field of house Construction including alternate green materials and technologies	Rtd.SD on Contract
3. Expert in IT/MIS/PPMS	PM MIS on contract
4. Expert in Financial matter	Rtd QM (F)
5, E*pert in Social Mobilisation	Rep of SSAAT on contract
6, Training Coordinator	DEE NKs on contract
7. Executive Assistant	Manager IT- PMAY-G on contract
Il . District Level PMIJ	
1. To be headed by a full-time Program Officer or an officer of sufficient Seniority at the District Level	PD(H) Regular TGHCL Employee
2. Technical professional in the field of Construction	DEE on contract
3. IT Professional	Manager IT on contract
4. Training Coordinatof	DEE on contract
5. Support staff	Jr Asst. on contract
111. Mandal Level PMIJ	
1. To be headed by a full-time block level officer / Coordinator,	MPDO Regular Govt.
2. MIS Data entry operators	DEO on contract
3. Technical support staff	AE on contract

The financial requirements for the above PMUs is as follows:

(The wage and allowances sheet enclosed.)

	Per 1 year	For 5 years
State level PMUs	Rs. 1.27 Crs	Rs. 6.35 Crs.
Dist. Level PMUs	Rs. 2.02 Crs	Rs.10.10 Crs

C) Mandal level PMUs . Rs,14.30 Crs Rs.71.50 Crs.

Total:Rs,17.S9 Crs Rs.87.95 Cr8. IT Infrastructure (1 time):Rs. 4.71 Crs Rs. 4.71 Crs. Grand. Total:Rs.22.30 Crs . Rg. 92.66 Crg

. The salaries of the employees other than the Regular employees of Housing Corporation and Govt., are only considered in arriving at the salary O component of PMU.

	Per 1 Year	For 5 Years
The Central share (60%) :	Rs. 13,38 Crs.	Rs. 55.60 Crs
The State share (40%)	Rs. 8.92 crs.	Rs. 37,06 ors.
Total	Rs. 22.30 Crs	Rs. 92.66 Crs,

page.4

IfS

Page, 4.

Abstract:

The Cost implications for, a). 500 Demonstration houses, b) Training of 5000 master masons and c) constitution of PM Us at State / District / Mandal level for the 5 year programme period is as follows:

Rs in Crs

Component	Cost involved	PMAY- G Central share	State share		
			PMAY- G state share	Additional requirement to be borne by TGHCL / State	Total State Share
I. Technologr Demonstration houses (TDHs) (500)	25.00	8.10	5.40	1 1.50	16.90
Il. Master Mason Training (5000)	2,50	1.50	1.00		1.00
Ill, Constitution of PMUs at State / District / and Mandal level for a 5 years ro ramme eriod	92.66	55.60	37.06		37.06
Total	120,16	65.20	43.46	11,50	54.96

C)

The Govt., of Telangana vide in R.t no.876 dt, 16.11.2024 has consented its willingness to meet the State share of Rs.54,96 crores.

Therefore, proposals are here by submitted requesting to sanction the

Contd.,

proposed Implementation Support mechanism and release Rs.65.20 Crores as the Central share under the mentioned heads from out of the program funds for

implementation 01 PMAY-G scheme In eiangana.

Yours faithfully

Encls: As above

Sd/- dtd.26, 11.2024

MANAGING DIRECTOR

// T.C.F.B,O //

HNICAL CONSULTA

SENIOR TECHNI ONS LTANT

1111111111 11

PILE FOOTING LAYOUT PLAN

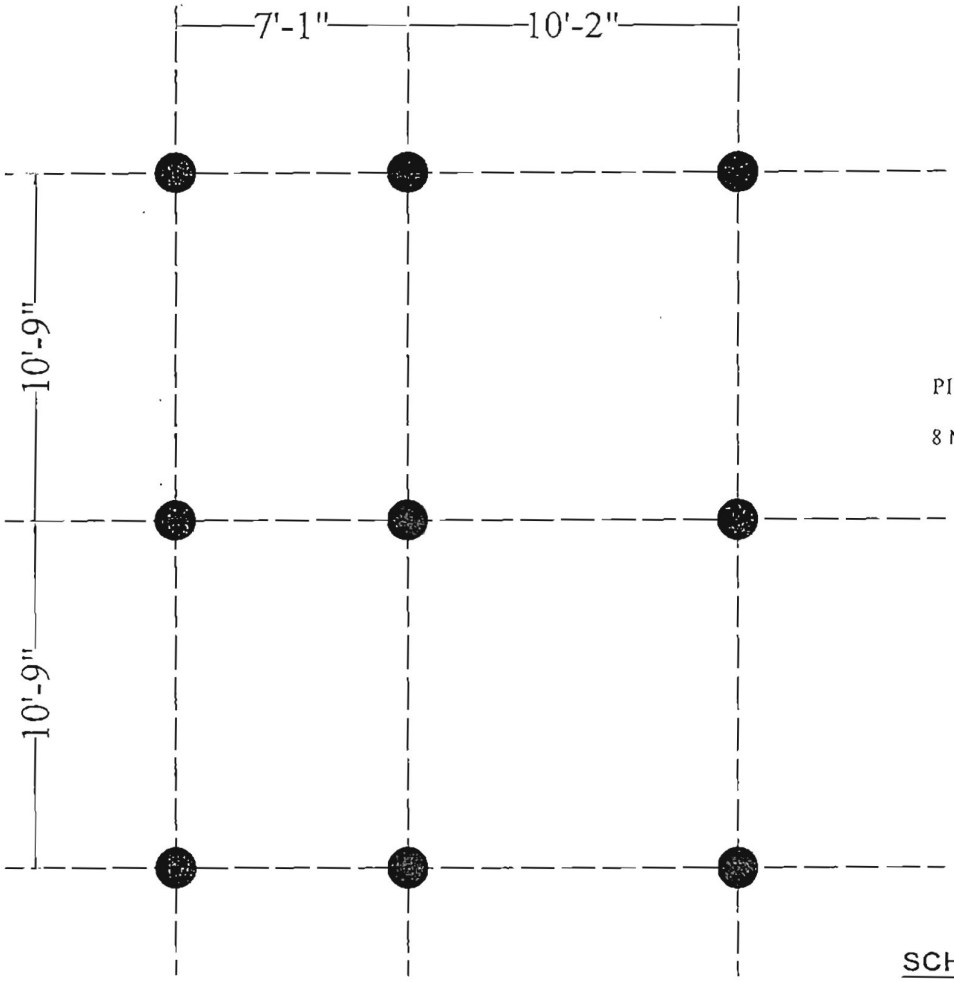

PILE FOOTING DETAILING

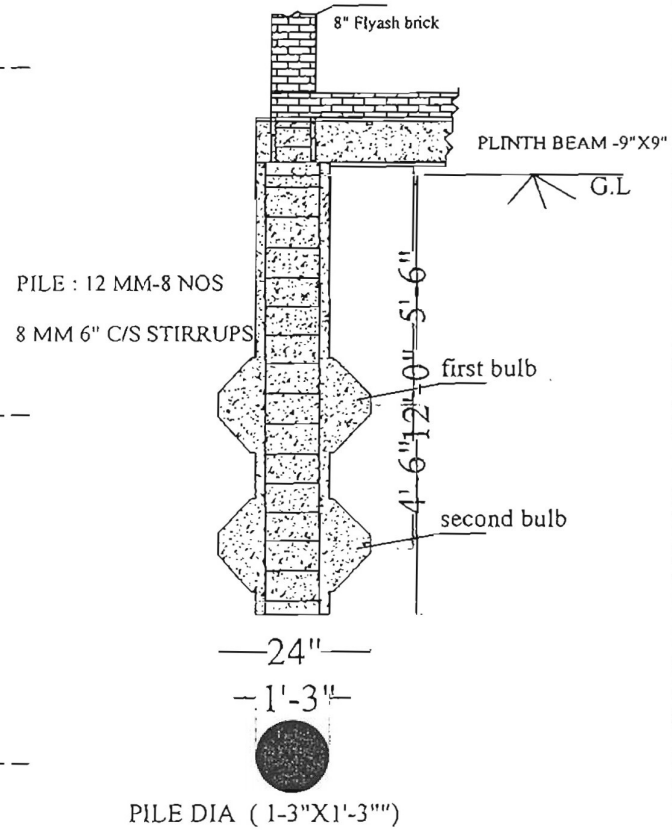

SCHEDULE:

TYPE	SIZE	DEPTH	REINFORCEMENT	GRADE OF CONCRETE	GRADE OF STEEL
PILE	1'.3" Dia	12'.0"	12mm Dia 8Nos, 8mm Dia 6"c/c stirrups	M25 Design mix(1:1:2) IS 456-2000	Fe 500 IS1786-2008

sbc= 100 kn/m^2

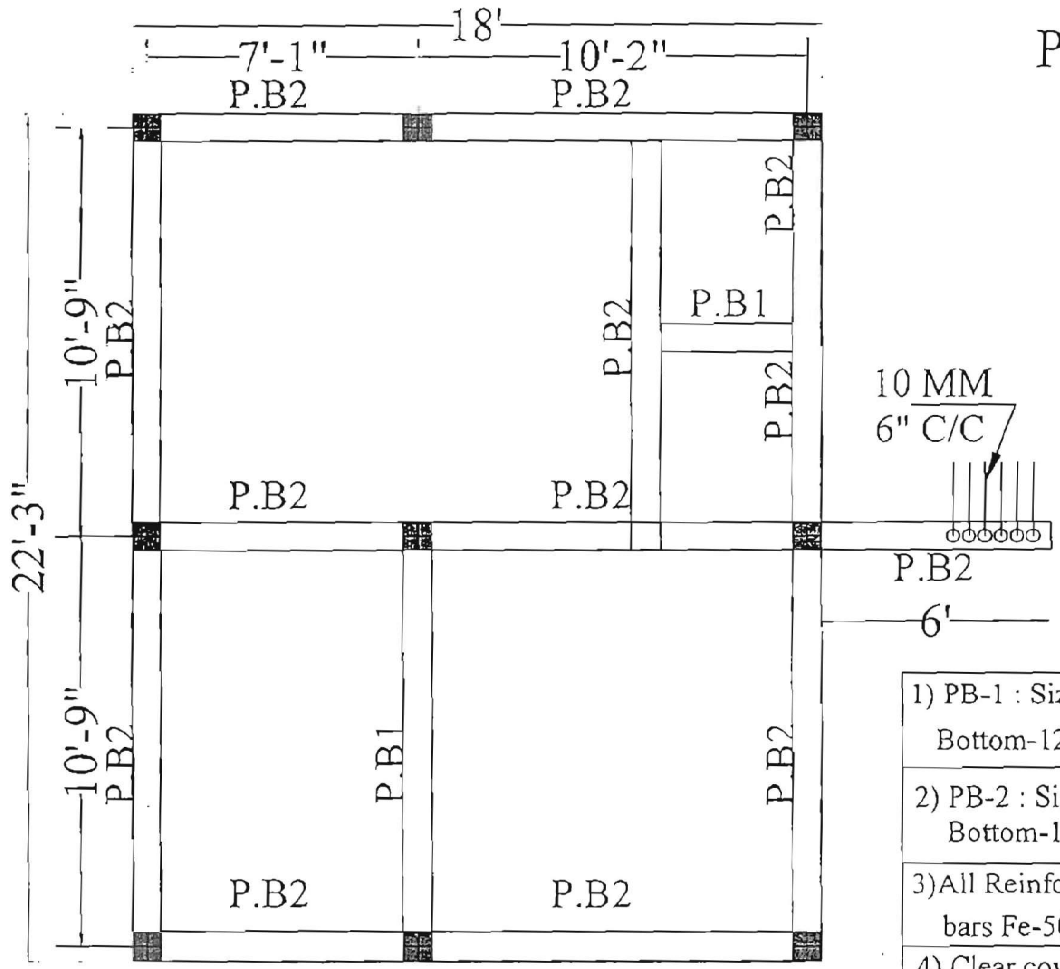

PLINTH BEAM PLAN

P.B1: 9" X 9"

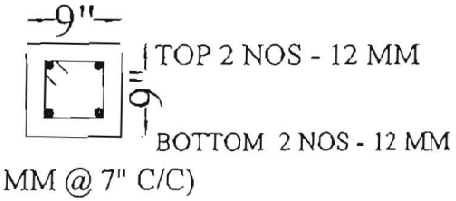

P.B2: 9" X 9"

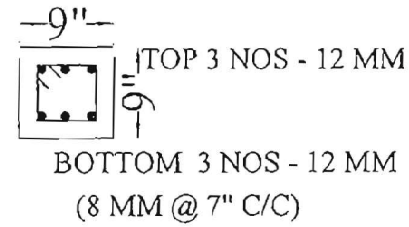

1) PB-1 : Size 9"x9", Top-12mm Dia 2Nos, Bottom-12mm Dia 3Nos, Stirrups- 8mm Dia 7" c/c

2) PB-2 : Size 9"x9", Top-12mm Dia 3Nos, Bottom-12mm Dia 3Nos, Stirrups- 8mm Dia 7" c/c

3)All Reinforcement are high yield strength deformed bars Fe-500 corfirming to IS:1786-2008

4) Clear cover to maintain reinforcement shall be
a) Beams-25mm. b) Slabs-20mm

5) Development shall be 50 times of the diameter of the bar

6) Grade of concrete M25 Grade for Beams & Slab

7) Grade of Concrete: M25 Grade for Pile

UMOUSse(pxos)pn

dn ⊖ weaqa6po ut

ʕ a⌋ 0q0 ∧ ⌋ 2aqIleqs

3&ge ⊖ 0 ⊓ au ⌊ ⌊uosu ⊥ a ⊢ 2sueq ⊖q ⊸ ⌈eqlS⌊⌊L

· ⌋ eq ⌋ 0⊠ ⊓

0q1 ⊥ 09eq=eu ⊖ (ʕ⊞ e ⊠ au⊸⌋d0 ⌊

e×30(0b · ⌋ eq ⊢⊥∧ ⌋ 0 pe ∧ ⌋ 0SOW!)09eq ⌊ ⊢

a de ⊓ (6

WI

—

US

C—

SW

eo

囲 SCIO 卜

H0201H09S NVId

(0)E@」IK= 3 ow q 亠 00ᔕ卜800 9 皿 I-S 丨ハリ 3 ᔕ (ハリ 「

29S!qpeqeqs. du ハリ 00 丨」 (6

D0,9 無 09 ハ 冂 P

X—6´ N←N ∩

冂 0 :9-~卞: - SONZ

:9-01)<119-,6 --9-

X--6---9

冂 冂 Y 卜 N 田 卜 0 ュ > (

ッ3ッイ99H.LN-11d

: .9X:9ゑ SON「(0ト000

seweJd opu｜ や00Sゞゞぐ 3丑000ど2｜｜0「(4

(Z1 ﾊ) と ﾍP 090XNw=2｜0っ0］や ﾛ｜03 (C

祐 ℃I

日を「H

: -01

-0. C- X6.-0.

SNOILVDIdI

DAdSXX-

NOTLDHS

NOILVAV

IdIN0u N ʕ

コロし

亨 V

一 賊 S00

OIS」00 ロ<ペ<ゃ<ゆ<ゃ<ペ<ゆ
8イ「S」00 ロコ<ペ<ゆ<ペ<ゆ

9HSVAIJ

ロ 2 し

5ヤAI.J.
1」くゃ←し28ヒ
U28し

38 一と2ロ十ル

昆

THI

NT,

Id

0NI

I00

ISO
IVI
(Id

fl″IQNIVIN

JAJVuIGNId

Sf10H

0N0ILVUISI

NOJ’WGM-IJ

ONOILNS-

SSOHD(INVN

OILVAffla

NVrld

FRAMED STRUCTURE
FOOTING LAYOUT PLAN

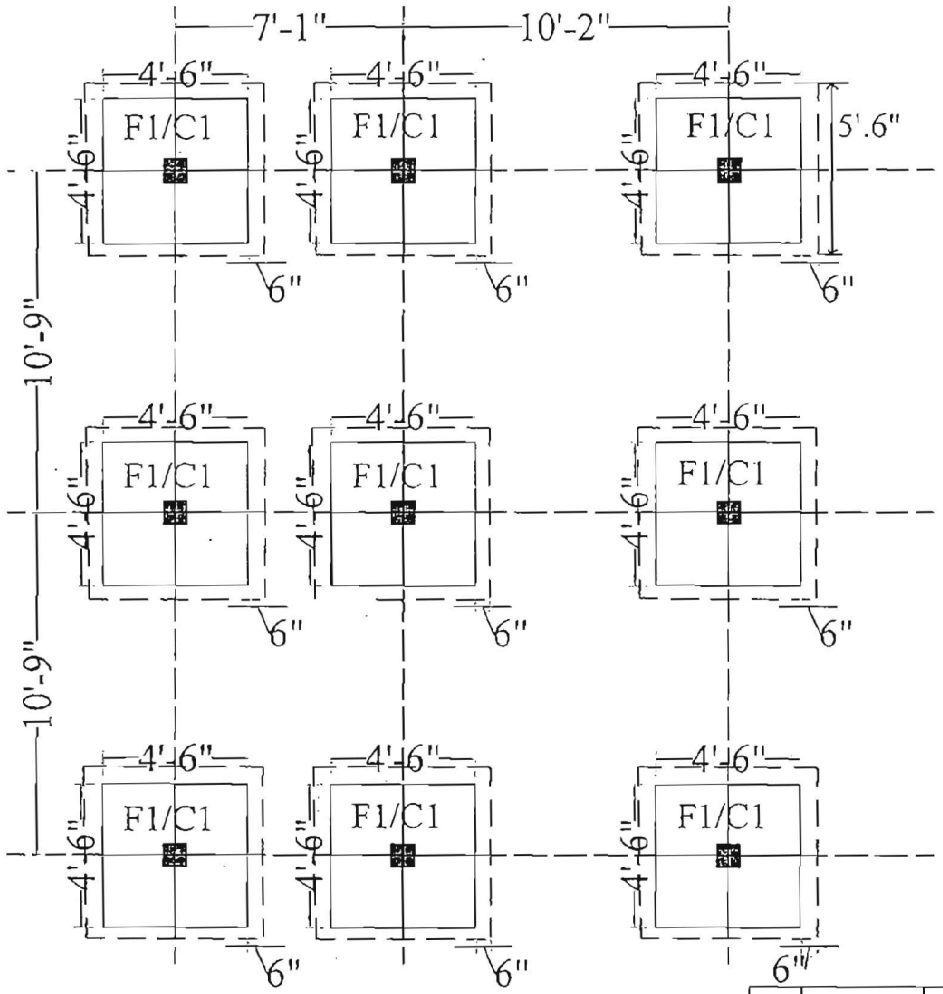

FOOTING LAYOUT PLAN
sbc= 250 kn/m^2

C-1 TYPE (9"X9")

4 NOS - 12 MM
(8 MM @ 6" C/C)

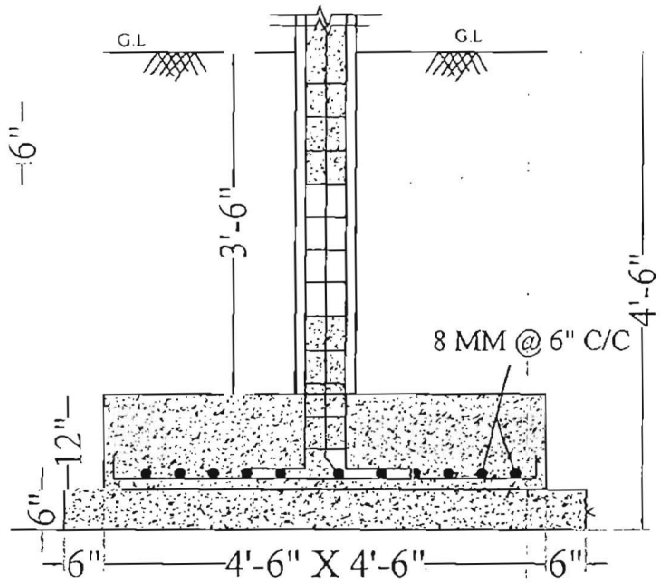

F-1 TYPE

FOOTING AND COLUMN DETAILING

TYPE	SIZE (LxL)	DEPTH	REINFORCEMENT	Grade of concrete	Grade of Steel	SBC
F1	4'.6"x4'.6"	12"(300mm)	8mm dia @ 6"c/c two way	M25 Grade IS456-2000	Fe 500 IS 1786-2008	250 kn/m^2
C1	9"x9"	-	12mm dia Stirrups 8mm dia 6" c/c	M25 Grade IS456-2000	Fe 500 IS 1786-2008	-

C
)

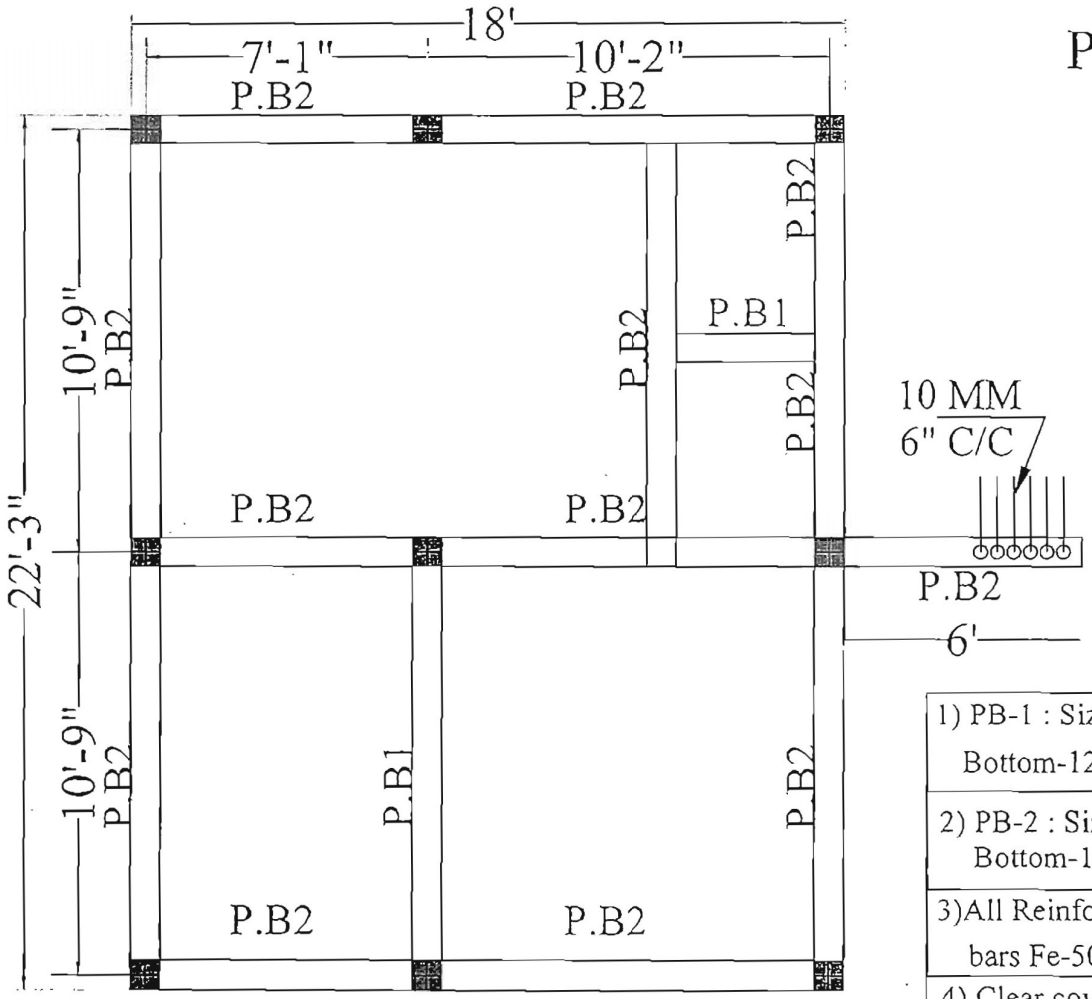

PLINTH BEAM PLAN

P.B1: 9" X 9"

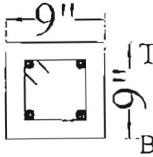

TOP 2 NOS - 12 MM

BOTTOM 2 NOS - 12 MM

(8 MM @ 7" C/C)

P.B2: 9" X 9"

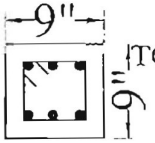

TOP 3 NOS - 12 MM

BOTTOM 3 NOS - 12 MM

(8 MM @ 7" C/C)

1) PB-1 : Size 9"x9", Top-12mm Dia 2Nos, Bottom-12mm Dia 3Nos, Stirrups- 8mm Dia 7" c/c

2) PB-2 : Size 9"x9", Top-12mm Dia 3Nos, Bottom-12mm Dia 3Nos, Stirrups- 8mm Dia 7" c/c

3)All Reinforcement are high yield strength deformed bars Fe-500 corfirming to IS:1786

4) Clear cover to maintain reinforcement shall be a) Beams-25mm. b) Slabs-20mm

5) Development shall be 50 times of the diameter of the bar

6) Grade of concrete M25 Grade for Beams & Slab

7) Grade of Concrete: M25 Grade for Columns

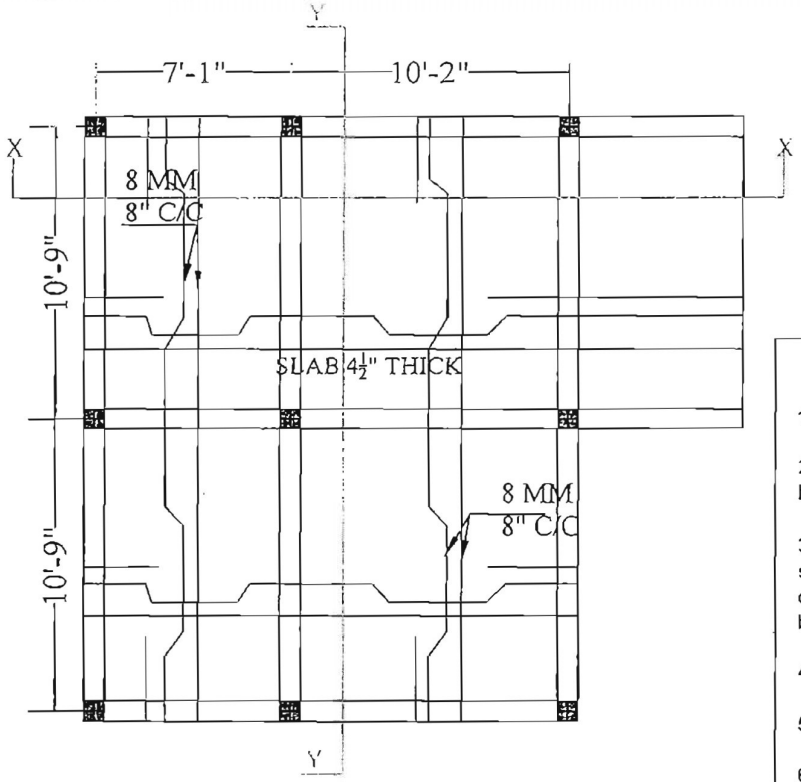

SLAB STEEL PLAN

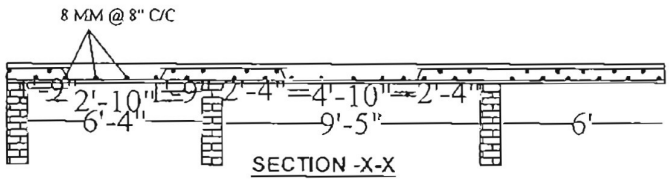

SECTION -X-X

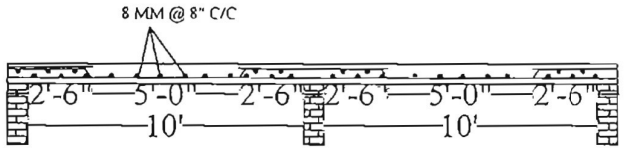

SECTION -Y-Y

Note:-

1) Alternate bars shall be crancked.

2) Extra bars shall be provided over continuos bottom bars of same diameter.

3) Where the spacing of bars(or) dia of bars is not same in the adjacent panells,provide additional bars of 8T @200c/c on top at support in addition to extra bars.

4) All dimensions are in feet.

5) Do not scale, read figured dimensions only .

6) Grade of concrete for
   a)Slab-M25
   b)Beams-M25

7) All Reinforcement are high yield strength deformed bars (Fe 500) confirming to IS:1786-2008.

8) Clear cover to maintain reinforcement for
   a) Slab-20mm
   b) beams-25mm

9) Lap length shall be 50 times of the dia of the bar.

10) Development length (Ld) shall be 50 times of the Dia of the bar.

11) Slab: The top bars at the discontineuos edge shall be anchored in to the edge beams up to Ld(50xd) as shown in the typical reinforcement details.

PLAN, ELEVATION AND CROSS-SECTION OF THE DEMONSTRATION OF HOUSE INDIRAMMA INDLU

FRAMED STRUCTURE

PLINTH AREA-400SFT

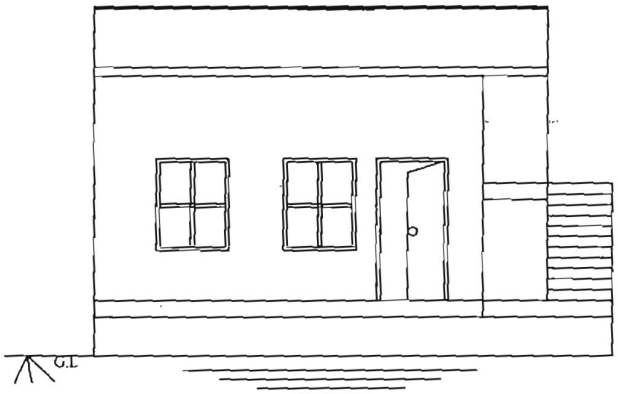

FRONT ELEVATION

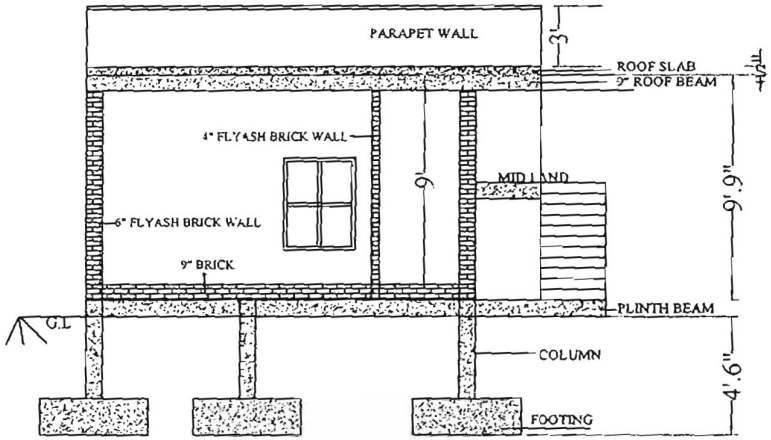

SECTION-XX

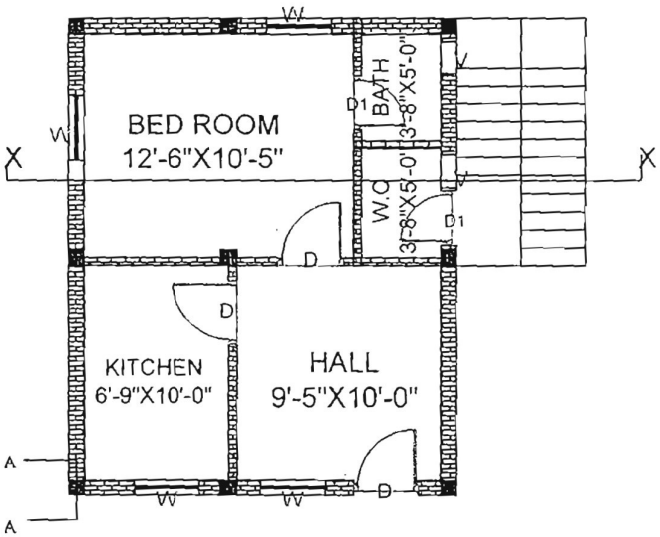

PLAN

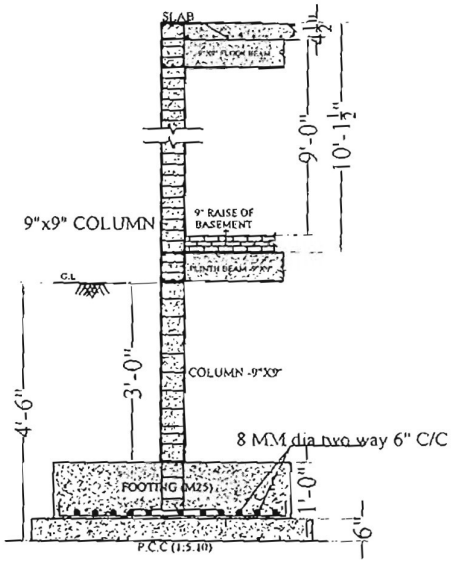

SECTION-AA

SPECIFICATIONS

1) Footings & Columns:RCC Design mix M25 Grade Concrete (1:1:2).
2) Beams & Slab: RCC Design mix M20 Grade Concrete (1:1.5:3)
3) Superstructure:Flyash brick masonry CM(1:6),6" External,4"Internal
4) Plastering:- Internal CM(1:6) 12mm thick
   External CM(1:6) 20mm thick
5) Joinery: RCC/CRCA/MS Door & Window Frames

Door(D)	3 NOS	3'-0"X6'-5"
Door(D1)	2 NOS	2'-6"X6'-5"
Window(W)	3 NOS	3'-3"X4'-3"
Window(W1)	1 NO	3'-0"X2'-5"
Ventilator	2NOS	2'-0"X2'-3"

6) Ventilators : RCC Jallies
7) Flooring: shabadhi stone

FRAMED STRUCTURE
FOOTING LAYOUT PLAN

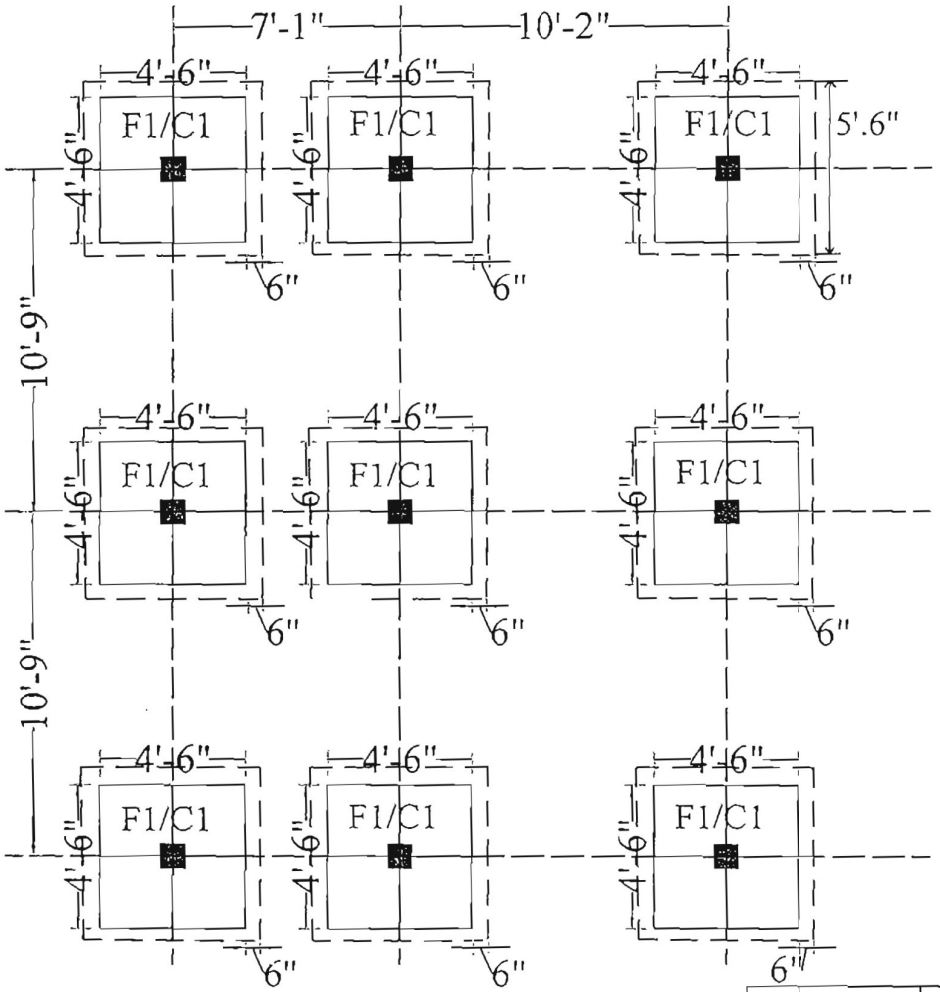

FOOTING LAYOUT PLAN
sbc= 250 kn/m^2

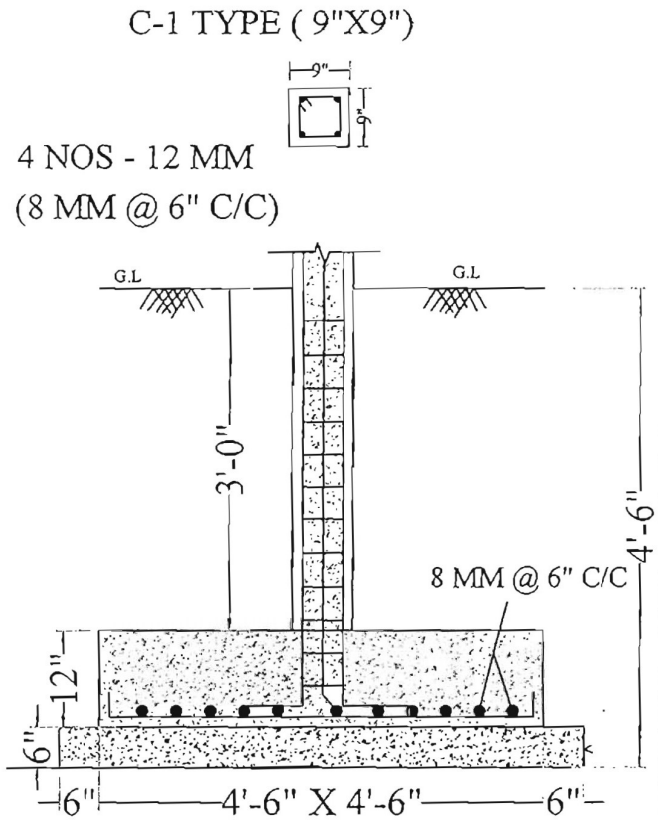

F-1 TYPE

FOOTING AND COLUMN DETAILING

TYPE	SIZE (LxL)	DEPTH	REINFORCEMENT	Grade of concrete	Grade of Steel	SBC
F1	4'.6"x4'.6"	12"(300mm)	8mm dia @ 6"c/c two way	M25 Grade IS456-2000	Fe 500 IS 1786-2008	250 kn/m^2
C1	9"x9"	-	12mm dia Stirrups 8mm dia 6" c/c	M25 Grade IS456-2000	Fe 500 IS 1786-2008	-

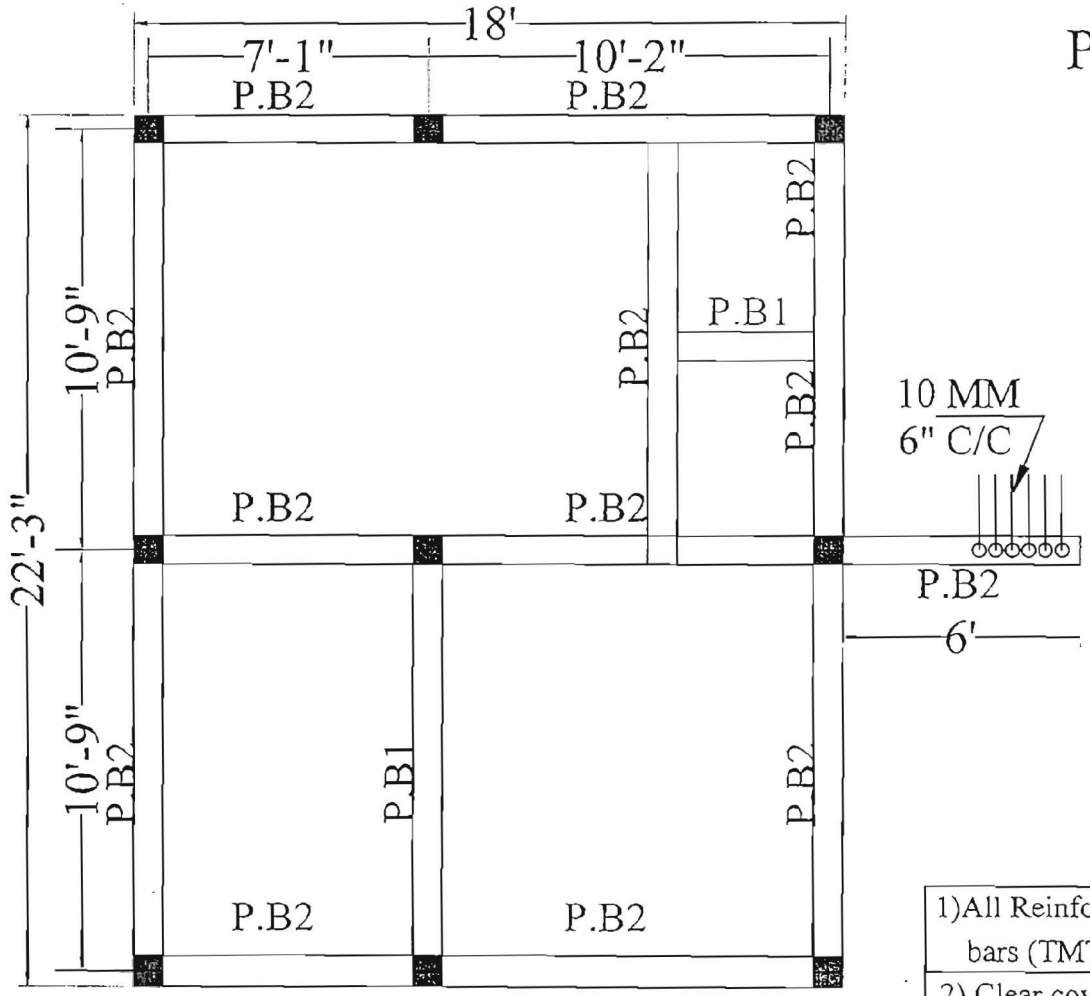

PLINTH BEAM PLAN

P.B1: 9" X 9"

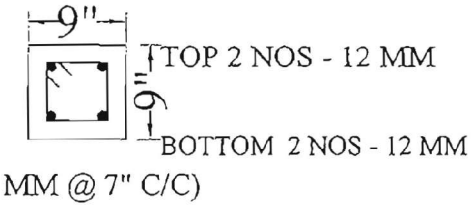

P.B2: 9" X 9"

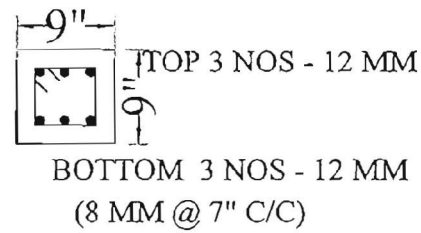

1)All Reinforcement are high yield strength deformed bars (TMT).
2) Clear cover to maintain reinforcement shall be a) Beams-25mm. b) Slabs-20mm
3) Development shall be 50 times of the diameter of the bar
4) Grade of concrete M20 Grade for Beams & Slab
5) Grade of Concrete: M25 Grade for Column

A-A-

NOLIOS

X-X-NO | 10 ミ S

pCZ9:X9:

pff19:X9:

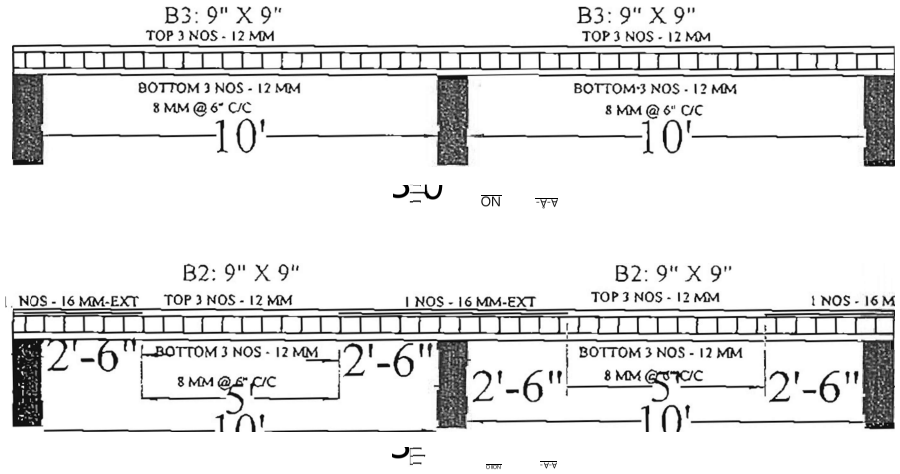
B3: 9" X 9"
TOP 3 NOS - 12 MM
BOTTOM 3 NOS - 12 MM
8 MM @ 6" C/C
10'
B3: 9" X 9"
TOP 3 NOS - 12 MM
BOTTOM 3 NOS - 12 MM
8 MM @ 6" C/C
10'
B2: 9" X 9"
NOS - 16 MM-EXT
TOP 3 NOS - 12 MM
1 NOS - 16 MM-EXT
2'-6"
BOTTOM 3 NOS - 12 MM
8 MM @ 6" C/C
2'-6"
5'
10'
B2: 9" X 9"
TOP 3 NOS - 12 MM
1 NOS - 16 M
2'-6"
BOTTOM 3 NOS - 12 MM
8 MM @ 6" C/C
5'
10'
2'-6"

L

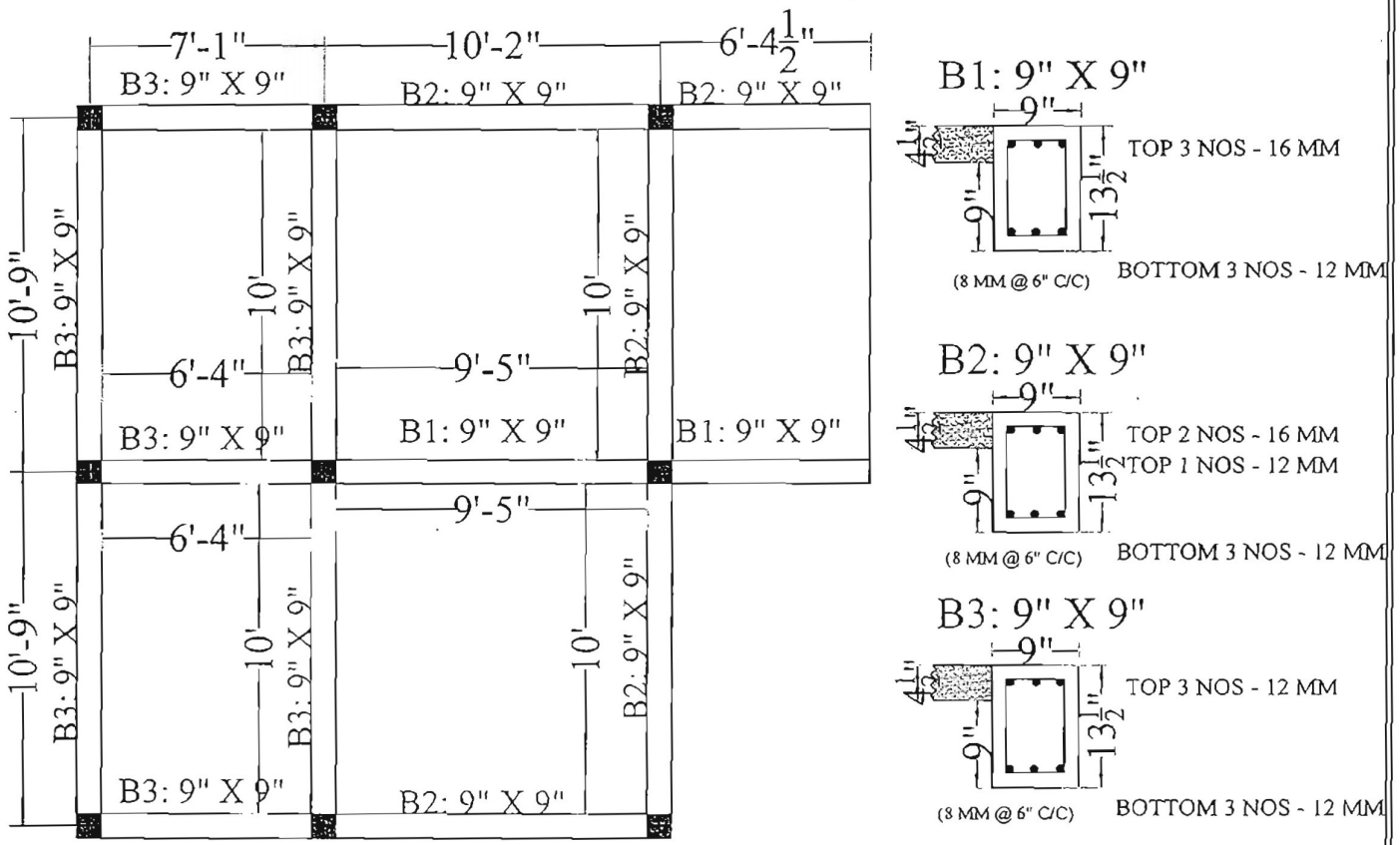

ROOF BEAM PLAN

070—

(6 ㅂㅁ de | ㄱㅎ eq ㅎ 6u2 | ㄱㅓ eq ㅎ 02 ㅎ eq ㄱㅓ q ㅎ bq ㅎ | ㄱㅓ.

WIN9 •

ㅎ w

8 (q

wwoz-gelS(e

ㅎㅌㅇㄱㅓ | ㅎㅌㅇㄱㅓ ㅂㅁㅌㅓㅎ 8ㅓㅂㅎ

• ▌a u! SU01SU3W!P=

ㅅ(十

·」3· |

ᄋawes」022qtuouoq

sonu ᄂᄂ u03」a》

0peplA0JdeqIleqssue

q 日」 ㅋ

·paou 日」0aqIteqs22q(V

— ₄ᄉ N MI=한 8V

」01

8

6 01

X

File No:TGHCL-ENGG/SCHE/35/2024-ENGINEERING SECTION

Minutes of the Video confererEe by .the Managing Project Directors/ DN'Os[0] off at 6',OQPM

The Hon'ble Chief minister of Telangana has •launched a INDIRAMMA INDLU Mobile App on Dt.05.12.2024 for conducting survey for the applications' received under Prajapa)ana 2024 for selection of eligible beneficiaries to .take. INDIRAMMA INDLU. Demonstration houses at all •the. •Mandal headquarters in State. The the hon'bie Chief Minister has also instructed to conduct survey.

C Video Conference is conducted with all the Project Directors / Dist. NOda%t. ö'ffieers' O along with the Housing staff. The Managing Director while briefing the Swv,ey details and expiained tn detait on App functions and instructed to start the
o from tomorrow onwards.:

C) 1. Informed to all PDS Housing/DNOs to obtain approval of Collectors undertake this survey, along with .th•ejr designation .and •contact

2 The Mobile App is available in English, & Telugu

3 Logins have already provided to the District collectors, and :'thé -list prepared can be uploaded in the Collectors login, so as to create the C) logins of Panchayaths/wards.

4.After conducting the logins message and O TP will be sent to the .r.egistered rnobi)e numbers of the Surveyors of Panchayaths/Wards to enable these for logins.

5 The surveyor can open •the App and download the data an,d s.ta6Üthe survey in the village / Wards for the list availbel in the App.

6 The survey shail be done in the transparent manner

.7. The usage of Mobile App training was given on dt03.12,2024 to the eDMs in the district level. In turn the eDMs shan give training to the Surveyors.in the district level.

8 The. step by step• proc.edure •for conducting the survey thr.pugh' explained in detailed. However, the PPT and one page .hØté. WIT(he corfimunicated for reference,

9, If the applications in one GP / Ward are. more than 500, can be created sending proposals to the head office for perrniss.ion%.

O 10.All Applications available in App shall be verified,

11. Surveyor should complete the survey perfectly and mention the eligibility of the applicant in the App, in tine with the criteria as laid out In GÖ MS. .no.7 of 2023.

C)

O 12. The verification pr.ocess shall bé supervised by ä'n officer of Gäzettéd rank(one village special officer föl[Y] a cluster of villages),

C) 134 as Houses per the will guj'delines be sanctioned issued to in the. Go poorest Ms, No to 7, poor Dtci.09.03,2Ö24 I most needy to BPI, the. familieshaving.

own site family in 1 [5t] phase,

14,Randomiy chosen 5% Eligible & 5 % In-eligible applications W$l.l;., be scrutinized by the MPDO/MCg fronn their given logins.

15. The INIDRAMMA committees constituted at village Wafd accompany with surveyor while conducting •the sur.vay and do• con.•cqge+lt

C)

File. No.TGHCL-ENGG[f](S.eHEÌB32024-ENGlNEERlNG S.ECT/QN

Socr;al audit,

afidi.

by . the qnd: of ?t024i [s] qr:ama

be .cëfi_ducted Wteh "the sanQtlo,n of ZWeekot..]atnuary,

(Mbd€l. with 4.00 area

uni! sost of ag Lins the state

IYËigdS[N], be by

i:e$nû.lo.glës:

for: a houSe. to (

demôriS.tr;a.tiétl •houg.eg. bu iilt. using ava to

be an opportunity .for the beneficiaries .Ito for

Of. •ho,uses, periences spaces, light;

Me:ntilatjorùl. 'typq„ of}.ff[t]h$shing,

get; of the cost and. incremental d.emo house Gan

.use:frì future qs hQusing F?MU

CQ,lum

Seo

Pr,êcasE RCC

ARCtfframe with 6" SC block:masOnr.Y
P.recast RCC

.;i$$ihà bAe

RCC

•âfl¯.•,•

'tiled, fiÏler RCC

RCC
Joinery
CRCS frames
Powder coated steel frames
RCC Door& window frames
UPVC

Action:

l .Scat-t construction of' Demons.tratiorr houses at Manda:l fou ndations with the concerned MLA-s.
2 The Plans, structural designs for 3 differen.t type of cornrxlunicated to facilitate to adopt for constructions. offt.'he 110Q,ses.
3, T)ne I-DeLT)Q houses should corrtple,te in 45 days,

level, by laying
technologies are
ie demonstration

C) GENERAL

Certain DNOs have requested to post the EGES / Dy.E-.E (•HöuSjn•g, Staff) and
C) appoint the computer Operator. Further, requested to / Computer for attending the works under INDIRAMMÅ I'NDLU' prlogpåhime•.

The Managing Director assured for providing furniture- and staff whereve'r
C) necessa ry.

M
Sd/-09.12.2024
MANAGING DIRECTOR

The Commissioner GHMC/
All the Districg: Collectors in the State.
C) Copy to the Project Director (Housjhg)/DNOs in the State,

C)

// Attested//

C) Superin€ehd:tng Engineer

C)

79

C)

F No. T G HCL-ENGG/SCHE/36/2024-ENGINEERING SECTION

TELANGANA HOUSING CORPORATION LIMITED, HYDE
No.3-6-184, Street No.17, Urdugally, Himayathnagar, Hyderabad

Hsfder-a:btid-29

H

.CJ!Ri'qWLAR

Circular No. 1116/TGHCL/E&P/INDIRAMMA INDLU/2024, 09/12/2024

sub• TGHCL- CL- INDIRAMMA INDLU Scheme - Survey of Prajapalana application.s thnough ns through Indiramma Mobile App- Certain clarrfications on' the Eligibility question(Question no.4) in the App - Circular instructions issued - Req.

Ref:1.G.O.Ms No.7, Transport, Roads & Buildir & Buildings (RH• &) Dept., dt.09.03.2024.

2.LaunciA, launch of Indiramma Mobile App by the Hon' bl•.e Chief Minister dt,05..12.2024.

3 Minutes of the Vid.e.o ference held .on .dt.05.12 202.4 ,

C) Govl. has corrunenced tine new Housing Schenne "INDIRAMMA INDLCJ" for construction of 4,50,000 house's .æfiåtänci•al assistance of lakhs with

I OQ% subs•jdy with' I-the •r.Qlld-W(ng eli/g/bility criteria.

Vide fef•erence• No. 7, Dt.03.12..2024 Governmel')t allocated 4, 50,000 houses @3500 houses ner Cön.sti&qency for construction during tl'le year 2023-26 with a unic• cost of RS.5.0Ø lakh$' per house •bofln in. Rutal and •UFba•n are-as to the

O beneficiaries having Own site.d Sites. •Provided •by •the Government in I st phase and issued operational. guidélin.e.s. f'b(implementation of th:e •pr.oqra•mme clu]y selecting the beneficiaries •fronn •out; of Praja Palana applications. For verifi.cat:i.on of the aöplications• received. .in• thé Praja Palana à Möb.ile App 'is develo

The Hon'ble C.hief minister o•.fr Telangana has launched INDIRAMMA INDL.U

C) Mobile App on Dt.0,5, IQ f.o.r conducting Syt•ve.y for L'he. applications received under Pralapa[ä.n.a f.or• •selec.t•.tön• of elli•g.ib.le beh'eficiacies to take up INDIRA•MMA INDLU.

Te stut tb'é survey, •a •Vlde'.o Conference js conducted y.v•ith all the Ptojec•t Directors / Dist. Noda: Officefs a•nd explain.éd it) detail on App •fwrjctions and instructed to start the survey from- cit. Off.A 2.2•024•.

C)

questions are coming from many Districts

In •this• req:arci as to the cri

File No.TGHCL-ENGG}SCHEh36/2024-ENGlNEERlNG I.IUIN

to be u,sgu. ..>y. *the su.r:yery.gr. _for the of the

Z.' i'n

in this .i•.f• beneficiaries '..tha;t the, eligibility criteria -Wor

as per GO •MS selec.€l.bn

a:. Hoys:e.hpld. should Below Poverty Line (BPI) family

-A .co.p.y.. of the .06'.2024 is

'the tn•.ust: be -BPL(based on • the field the.

-house: •s Of:

r;eh.ted

[n. case ,o.r .N.'CC•' •houses, ö.fsrn'all

lareAi.vi.ng. .u:nd.er o.né •roof, then they may be fresh

'l•'oo small to accornmodat•e :eamibies.

con i

a 0.1

o o:tel.l a: hollS.e; e

s ('t.e. Cons for- :ir$ p•båsi2J

$u.c,h; be e'." c;cessive pha ses.

the. Ahe

wi!! also .be avaiiaoie In s

ö e Ce 'te c 0m m e rs dati•on s

an.d' fix bej,l.iO.

.'ingqgp.Q&te.d. ..t•ö down. -the. The

by- surveyors.

Therefore, the District Collectors are requested Co clar:fÉ.y the sgme to• the Surveyors, supervisory officers (village special officers) and the MPDOs/Municipal Cornmissioners.

Sd/ Dt.09.12.2024.

MANAGING DIRECTOR

The Commissioner GHMC,

All- the ct Collectors in the State District

Copy:to Project Director (Housing)/DNOs Ch'e 'ih the State.

/Attested/

Superintending Engineer

C)

TELANGANA HOUSING CORPORATION IZMITED/ HYDERABAD

H,No.3-6-184, Street' No, 17/ Urdugally, Himayathnagar, Hyderabad-29,

No.11 16/TGHCL/EAP/1NDIRAMMA INDLU/2Q24, Dtd.09.12,2024

Sir,

Sub:TGHCL- INDIRAMMA INDLU Scheme - Conducwng Mobile App survey for verification of Prajapaiana Applications 5% random check of applications at Mandal/Municipal levels - Instructions issued - Reg,

G.O.MsNo, 7/ Transport/ Roads & BuildinU5. (RH & CAI)

C) Peptr,dt,09.0

2. Launch of Indlramma Mobile App by; the Hon/ble Chlef

C)

3.Minutes of the Video conference. held on de 05.12.2024,

C) 4, F/O Cr. No. even dt.09.1Z2024.

INDIRAMMA INDLU Mobile App is launChed on Dt.05.12.2024 for conducting survey for the applications recelved under Prajapalana 2024 for selection •of eligible beneficiaries to take up INDIRAMMA INDLU,

The objective of the Mobile App is to have a transparent mechanisnn to determjne eligibility and for prioritization of eiigible benefic.jaries for sanction I To achieve this objective / it is necessary to ensure:.thåt rellé>ie data Is entered by surveyors, For quafity control) regular' and periodlc Super-checks. are necessary,

Hence, It js decided to do a mandatoHy super-check at least 5% of. the processed applicatlons and 5% of the'inelig)ble applicatiohs selected randomly will be forwarded to the Mandal/Municipal Level Login (on the. MPD.O/MC

Mobile app) for super check,

C)

Durlng. super check/ If any discrepencies are •found b' thé MPDO/MCr then feedback may be given 'to the sürVeyor °and course correction be taken This is meant to act as constant and continuous feedback for collectors, and not just a post-mortem exercise. Hence, 5% of the applications processed everyday will be

randomly picked. up by the system and sent to u Mandal/Municipal. Commissioner; the next day.

Logln•

Therefore, the District Collectors are requested to issue necessary instructions and ensure this super check by the MPDO/MuniciPai Connmissioners,

Yours faithfully

Sd/Dt.09.09.2024

MANAGING DIRECTOR

The Commissloner GHMC/

All the District Collectors in the State

Copy to the Project Dl•rector (Housing)/.DNOs in the State,

/ Attested/

Superintend ing Engineer

File No.TGHCL.ENGG/SCHEM7/2024-ENG!NEERING SECTION

TELANGANA HOUSING CORPRORATION LIMITED , H.NO.3-6-184, STREET NO 17 HIMAYAT NAGAR HYD-29

From:
Sri. V.P. Gautham, I.A.S.,
Managing Director

To
All the District Collectors
in the State of Telangana

Lrno: TGHCL/986/TDHs/Mason Training / NAC /2024 09/12/2024

Sir/Madam,

Sub: Construction of Demonstration houses in Rural Mandal c head quarters - guidlines- issued -Reg:

Ref: 1. Go Ms no 7 dated 09-03-2024 of Transport, Roads & Buildings (RH&CAI) Dept, Govt., of Telangana.
2. Frame work guidelines of PMAY Grameen by MoRD, Gol.
3. Guidelines for construction of Demonstration Houses by MoRD, GOI
4. Govt.j G.O MS no.876, T, R&B(RH&C.A1) Dept., dt 16.11.2024
5. Letter no.5703/RH&CA1/2024 Dated. 16.11.2024 of C) secretary to Govt.

I invite kind attention to subject and references cited above.

The Government in the reference first cited has announced commencement of Housing program by name INDIRAMMA •INDLU for proving construction assistance of lakhs to the house less poor in C) a phased manner and to take up 4,50,000 houses in the first year. It is

C) proposed to take up these houses in Beneficiary Led Construction (BLC) mode, Government has stipulated construction of at least 2 rooms with kitchen and toilet of not less than 400sft area with R,C.C stab.

All the house of INDIRAMMA INDLU program are proposed to be

C) dovetailed with the Pradhan Mantri Awaas YoJana(Grameen),

PMAY, of Got,

C) To ensure timely completion of quality houses to the poor within the available resources, it is essential that crucial support services like briefing on the Stage wise requirement of materials and resources, Different options of locally relevant house type designs including green technologies, Awareness on cost saving construction technologles,

Facilitation for procurement of appropriate construction materials,

rue mo. 1 ——————————————————— 1 ION

Availability of sufficient number of trained masons etc., are provided to the beneficiaries.

The Hon'ble Chief Minister while launching the INDIRAMMA INDLU Mobile App on 05, 12.2024 has announced construction of Demonstration Houses at all Rural Mandal headquarters in the State.

These Demonstration Houses shall be taken up with the suitable house designs based on Affordability, space planning, innovative technologies and specifications appropriate to the local context be constructed at every Mandal level preferabiy in the premises of the Rural MPDO office and made ther available for the beneficiaries to visit .This would provide an opportunity for th beneficiaries to witness construction of demo houses and experience the spaces, volume, circulation, privacy, light, ventilation, type of finishing, door windows, etc. in the suggested house designs, In addition, they will get a clear idea of the cost and incremental development of the house

Accordingly 2 model type designs of 400 sft (one for square plot and one for short plot width) along the with Structural design drawings of 3 cost effective technologies are enclosed here with for your guidance. These 3 technologies are only for guidance. The list of different cost effective technology options are listed below for consideration.

Execution:

e Area and cost : Each demonstration house will have a plinth area of 400 sq. ft. and the cost of construction shafl not exceed Rs. 5.00

Lakhs.

e Objective: To showcase cost effective construction, specifications, use of innovative technologies for affordable construction, Beneficiaries wiii be able to visit these houses to understand design typologies, construction guidance and cost involved, e Future Use.' These houses. serve as Demonstration labs for witnessing/participation by the bcal masons and the prospective INDIRAMMA beneficiaries. On completion, this house shall be utilized as Housing PMU/ AE (H) office at the Mandal level.

- Executing Agency: Housing Corporation DEE / AES will execute the

File No.TGHCL-ENGG/SCHE/17/2024-ENGINEERING SECTION

Demonstration houses under the supervision of the Nodal Officer/ PD(Housing). These houses shall be executed departmentally.

e Involvement of Masons: Suitable number of masons from the villages be identified and encouraged to visit the construction process to demonstrate cost savings , ease of construction, use of local materials and time saving.

Construction Technologies appropriate to Tetangana :

- Foundations: R.C,C Short Column, Isolated Stone Column, Precast R.C.C, Open Foundation.

Superstructure: 8" SC block masonry, R.C.C frame with 6" SC block masonry, Precast R.C,C, Rat-trap bond masonry, Stabilized Mud block masonry, Laterite/Shabad stone masonry.

- Roofing: Pre-cast R.C.C, RC joist & Plank, Mangalore tiled filler R.C.C, R.C.C.
- Joinery: CRCS frames, Powder-coated steel precasted Door & window frames, UPVC.

Cost sharing : Central Share: Rs.1,62,00

State Share: Rs. 3,38,000/-

Time Frame: 45 days.

C) Alt District Collectors are requested to commence the construction of demonstration houses at the respective Mandal headquarters by laying the foundations involving the Hon'ble Ministers in-charge of the district and other VIPs during the n Telangana Praja Palana-Praja Viyayotsavalu lt.

[redacted] VP GAUTHAM MANAGING DIRECTOR TGHCL MANAGING DIRECTOR O/O TGHCL

C) #ApprovedBy Designation

Encls: As above

Copy to all the Nodal Officers/ Project Director(Housing) for necessary action

Sd/-dtd,09.12.2024

Copy to GM(F) for n/a

MANAGING DIRECTOR

/ / Attested /

C)

SUPERINTENDING NGINE (Schemes)

C) gned by vp GAUTHAM

O09-12-2024 17:13:18

\ason: Approved

13/12/24

GOVERNMENT OF TELANGANA

TRANSPORT, ROADS & BUILDINGS (RH&C.AI) DEPARTMENT

Memo.No.6375/RH&C.A1/2024 de 12.12.2024

Sub :- T,R&B Department -INDIRAMMA INDLU- Rural Houses dovetailing with PMAY-G -Conduct of field verification of a" Prajapalana 80.54 lakh applications by using Mobile App developed by CGG - Guidelines - Issued.

Ref: - 1,G.O.Ms.No.7/ T,R&B(RH&C.A1) Dept, dt.•09.03.2024.

2.Govt. letter No.6375/RH&C.A1/2024/ Dept, de 11.12.2024.

3.From the M.D., TGHCL/ Hyderabad, Lr.No 1 116/TGHCL/ Indiramma Indiu/2024-2S/2024, 11.12.2024.

4. Video Conference of Hon'l)le Minister, Advisor to C, M & Chief Secretary with the District Collectors.

In the reference cited, orders were issued commencina the new Housing Scheme for construction of 4, 50,000 houses with a financial assistance of Rs.5.00 lakhs with 100% subsidy to the houseless poor families in the state named as Indjramma Indiu duly issuing the guidelines C) for the said scheme.

2. In the refe.rence 2 nd cited, permission has been accorded to the Managing Director, Telangana Housing Corporation Lirnited/ Hyderabad to conduct field verification of all Prajapalana applications by using Mobile APP developed by Centre for Good Governance (CGG) and to designate suitable officers at GP/Ward level for verification of Prajapalana Applications by the District Collectors concerned and requested to take further necessary action.

3. In the reference Yd cited Managing Director, Telangana Housing Corporation Limited, Hyderabad has requested to issue detailed instructions to the district collectors / the Commissioner, GHMC on functioning of mobile app and conducting the survey.

4. Governrnent, after careful examination of the m atter, hereby issues the following guidelines -

I. Features of Indiramma Mobile App:

C) 1 . Indiratnrna App has been launched by Hon 'ble CM on 5 th December.

C)2 . Objective during Prajapalana of the App and is ascertain to verify eligibility the applications as per G.O.Ms.No.7.received for housing

C)3 . One login- one phone: To prevent nnisuse, Phone binding done based on the mobile number of the surveyor. OTP-based logins.

4. Android based smartphone is essential for the survey.
5. App has artificial intelligence built into it to read the images fed into the system.
6. .Geo-tagging of site of const.ruction will be done at the time of survey. The sarne will be used for geo-fencing at the time of construction.

C) 7 . Offline app will be provided for use in areas with internet issues. In such shadow areas/ Data entered wili be stored on the device and wij(sync with the database whenever internet connectivity resumes,

(Contd.. 2)

C)

1
2:
//
2/
/

Il. Identification of officers for survey

1 . Collectors shall identify field level functionaries (except teachers) for survey at the rate of 1 surveyor per 500 applications and create logins.

2. Preferably panchayath secretaries/ SERP community coordinators /Agri Extension officers in rural areas.

3 . Ward officers/ Bill collectors/ Jr Assistants in urban areas.

4. .1n, case of bigger GPs/ mandal headquarters/ large divisions in corporations, etc., provision will be given to create more than one login in one GP/ municipal division.

5. Survey shall be done under the supervision of a mandai level officer(vjtlage speciai officer). One special officer for 4 surveyors to be

identified.

6. Survey entails taking photo of the residence and collecting details of house. site and certain other details to ascertain the eligiblitity.

111. DiStrict Action Plan

1.Collectors to assess the requirernent of surveyors.

2.They shall work out the timelines based on the surveyors availability.

C) 3. Mandal wise/ municipal wise action plans shall be prepared.

4. District wise action plans shall be prepared by Collector.

5. For smaller GPs less than 500 applications, the survey is expected be C) completed in less than 15 working days, In such GPS/ further steps shall be taken to issue sanctions without waiting for the completion of survey in other GPs.

IV.Training

1 , e District managers have been trained on the Mobile App at every

C) district.

2 . Cascading training shall be organised on the mobile app*

C) 3 . Collector wifl organise a training at the District level (for MPDOs/MCs/supervisors), EDM will be the master trainer.

4. MPDOs/MCs wilt organise a training at mandal level for the surveyors.

S. The surveyors shall be sensitized to take photos of all the pages of the title document, since it needs to be submitted to Gol for availing PMAY

C) benefits. Option will be provided to upload as JPEG(by taking multiple pictures of the pages)

V. Awareness

1. Press note shall be issued by the Collectors on the modalities of survey and the measures for transparency.

2. An awareness programme on the survey/ eligibility criteria shall be conducted with Indiramma committees at the mandal level

3 . During the survey, the applicant shall submit the Land Document of the site where house is going to be constructed. It can be a registered deed, house tax receipt, sadha binama, electricity bitl, etc.

4. Adequate publicity through tom-tom/ PA systems/ bulk SMS on the survey shall be made at the Gram panchayats.

C) (Contd. . 3)

e)

VI. Monitoring

1 . The following MIS reports are made available to collectors to rnonitor on real time.

i.Survey Progress

ii. House site availability report iii. Status of existing houses report, etc

2 Viliage special officers will be monitoring the survey process,

3 Indiramma committees will be doing a concurrent social audit.

4 Super check of at least 5% of eligible and 5% of in-eligible applications by the MPDO ' s/Municipal Commissioners. Mobile app based logins will be given to them.

5 District Officers/ Mandal speciat officers shail visit the field daily and give feedback to the Collector.

C) 6. Collectors/ Additional Coflectors shall undertake regular field visits and supervise the survey process.

Vll. Grievance Redressa(

C) A toll-free helpline wili be estab}jshed at the state level and in each of the districts, to receive complaints/queries from applicants/public» A grievance redressal portal will also be hosted on the Indiramma Indlu website developed by M.D., -IGHCL, Hyderabad .c:)

TIMELINES

C)

Awareness	13 th - 15 th Dec, 2024.
Training	12 th - 13 th Dec, 2024,
Survey	16th Dec- 31 st Dec.

5. Alt District Collectors / the Commissioner, GHMC shall take necessary action accordingly.

6. The Managing Director, Telanganå Housing Corporation Limited, shall monitor, coordinate with district collectors concerned & the Commissioner GHMC and furnish compliance report to Government.

C)

DR.JYOTI BUDDHA PRAKASH

C) SECRETARY TO GOVERNMENT

To

C) The All District Collectors.

Th9Commjssioner, Greater Hyderabad Municipal Corporation, Hyderabad,

The Managing Director / Telangana State Housing Corporation Limited/ Hyderabad.

Copy to.

The PS to Principal Secretary to C.M.(C.R)

The PS to Hon'ble M(Revenue, Housing, I&PR) The
PS to CS
The PS to Prl. Secretary to Government, MA&UD Department.
The PS to Secretary to Government(Housing), T,R&B Department.
The PS to Secretary to Government, PR&RD Department. C)

Sf/Sc.

//FORWARDED :: BY ORDER/ /

SEC ION OFFICER

C)

TELANGANA LIMITED,

HOUSING CORPORATION HYDERABAD H,No.3-6-184.

Street No. 17 , Urdugally, Himayathnagar, Hyderabad-29.

Memo, No.1116/TGHCL/E&P/INDIRAMMA INDLU(2P24, Qtd.13.12.2Q24

Sub:TGHCL- INDIRAMMA INDLU Scheme -conducting Survey through Indiramma Mobile App - Monitoring Qf survey by the senior offices TGHCL - Reg.

Ref: 1.G.O.Ms No. 7, Transport, Roads & Buildings (RH C. Al) Dept. / dt.09.03.2024.

2. Launch of Indiramma Mobile App by the Idon&ble Chief Minister dt.05.12.2Q24.
3. Minutes of the Video conference held on dt.Q5.12.2Q24. C) 4. This office circular instructions No. even Dt.Q9, 12.2Q24 addressed to all District Collectors and Project Director/ DNO.

C)

Vide references 2 nd & 3 C(j cited, instructions were issued to conduct the survey of applications received in Prajapalana through Indiramma Mobile App for verification of appflcanta under INDIRAMMA INDLU scheme, Accordingly / surveyor's logins are created and the survey is started in the villages and wards of the villages,

The following officers are here by nonninated to monitor the survey in the o erstwhile Districts shown against them duly inspecting whenever required. C)

1, Dr.S.Eshwaraiah, Senior Technical Consultant Medak

2. Sri.M.Chaithanya kumar, SEK hammam

3. Sri. M. Venkatdas Reddy, SE GHMC

4. Sri.P,Balram Technical Consultant Mahabubnagar

5. Sri.C.Bhasker Reddy, SE RSCL Nizamabad

C) 6. Smt,V.Sukanya, EE Nalgonda

7 . Smt.SrRannadevi Rangareddy

8 Sri.Vijayapal Reddy,EE RSCL Karim nag ar

9, Sri.Narender Reddy,EE RSCI,- : Aditabad

10.Srl.V.Ganapathi,Dy General Manager Warangai

These orders WWI come Into. force with irnmedlate effegt.

Sd/- Dt.13,12.2024
MANAGING DIRECTOR

To,

All the Officers cpncerned .

ɔy to the Nodal Officer/Project

Copy to,$e Nodal, Director (H) in the State.

/Attested/

Superintend Engineer

File No.TGHCL-ENGG/SCHE/22/2024-ENGINEERING SECTION

TELANGANA LIMITED,

STATE HOUSING CORPORATION

H,NO.3-6-18AJ STREET NO 17 HIMAYATNÅGÅR HYDERABAD-29

From
Sri V P Gautamj l, AIS
Managing. Dfrector

To
District Collectors,

Lr No.TGHCL/75S87/PrQduction unit/ Supply to Indirammma)ndlu/2024

Dated:18/12/2024

Madam/ Sir,

Sub: INDIRM4HÅ INDLIJ• Construction of 4, 50,0QQ, houses trough beneficiaries, Establishment of Block making Units by the Mahila Shakti/ Youth Groups in Villages/ Towns v• Scheme communicated for wide publicity and implementation* Regd

Ref: Go no. 7, dt 09.03.2024 of dept (RH&CIAI) Dept., Govt., of Telangana.

I invite kind attention to the Subject and reference cited above. The Govt has announced commencement of INDIRÅkrLL&Å INDLU programme to construct house to all the houseless families in the State over a period of 5 years and announced construction of 4, 50,000 houses In the first year at a unit assistance of Rs 5,00,00/- per house with 100% subsidy. It is a continvous program for next 5 years and houses will be sanctioned in almost the v.illages/ Towns,

Bricks are the essentially required material for construction, It can be C) seen that the availability of country bricks has come down and become scarce. Further it is also not advisable to go for production of clay bricks to safeguard the nitrogen r(ch top soils used in making the clay bricks: It becomes innperative to go for other alternate material (ike manufactured Fly ash/ sand cement blocks for construction of the•houses,

Each house under the INDIRÅÅMVÅ INDCU scheme require around 2200 blocks of size 12"x8"6" and one block making Unit will be able to produce blocks required for one house. It is proposed to take up 2800 hOlJSe in

C) each Mandal/Municipality in the State in next 3 years or to construct 80 houses every month. Hence) there will be a huge demand for such cement/ fly ash bricks

Contd., page 2,

Hence, It becomes necessary to arrange faci\ities for continuous supply of Fly ash) Sahd cement blocks in every village/ Towm in order to augment the supply it becomes heeessary to establish at least 3 units per Mandal/ Municipality,

A scheme for establishment of Block maklng Units is communicated i')ere with for wide publicity and sensitizing and encouraging the Mahjla Shakti groups/ Youth groups through SERP/MEPNVÅ to establish the Units,

The proposed tost for e$täblfshlng a production -Unit @ Rs 18 lakhs, It is estimated that the unit can recoup the investment along wfth interest and öYerheädS wlthln 2 years of establishment with a simple margin of Rs 2/ per block on the prdduction cost (Rs,2 f 2200 blocks A 25days A 24 months- Rs

26,40,000/-). The DiStrict Collectors are requested to give wide pubUcity and effort from SERP/MEéÅ'\-A sens(tizing and encouraging the Mahi(a Shakti grous in establishing the Units,

Sd/-VP GAUTHAM,
NANÅGiNG DIRECTOR.TGHCL,
MANAGING DIRECTOR 0/0 TGHCL
18/1 2/2024

.Copy to all the Project Directors TGHCL) for necessary action in the matter.
Copy subrnitted to Secretary to government, Housing,

// Attested //
Superintending Engineer (Schemes)
SUPERINTENDING ENGINEER (Schemes)
Telangana State Housing Corporation
H.No. 3-6-184, Himayathnagar
Hyderabad-500 029.

Signed by vp GAUTHAM
Date: 18-12-2024 17:40:15
Reason; Approved

HOUSING CORPORATION HYDERABAD

Circular

TELANGANA LIMITED,

J\JQS20/EE/1NDIRAMMA INDLU/Monitoring/_2024/ Dt: 18. 12.2Q24.

Sub. INDIRAMMA INDLU - Formation of State & District level Project Monitoring Unit (PMUs) - Certain guidelines - Issued,

Ref: I.G.O.MS No.7,TR&B(RH.A1) Dept,Dt.09.03.2024.

2, This Office Circular No 1116/ Indiramma Indlu/2023, dt,09. 12.2024,

3. This OfficeLr.No, 11 16/Indiramma Indiu/2023t dt.09. 12.2024.

4. Govt Memo No.6375/RH&C.A1)/2024,Dt.12.12.2024.

***

It is to inform that the Government is keen jn implementing the

C)

Flagship program of INDIRAMMA INDLU in most effective and transparent o manner keeping in view of the earlier short comings.

It is decided to implement the program through the District Collectors and the Commissioner GHMC. The following guidelines are issued in ReC) organising the Housing Corporation and formation of PMIJs at State, District o and Mandal level for effective implementation of INDIRAMMA INDLU programme.

State Level:

1. A Project Monitoring Unit will be established at the State level for C) handling day to day issues and guide the Distrjcts.

C)

2. A Vigilance Unit will be established with Senior Officers for frequent visits and monitoring.

C) District Level:

1. The District Collector wilt contjnue as the Executive Director of the Housing Corporation at District Level,

2. As part of strengthening of TGHCL the post of PD(Housing) is being filled in all the Districts. Required Ministerial Staff to assist the PDC Housing) will be posted as per staffing pattern of TGHCL.

C)

3. A District level PMU will be established in every district with Dy.EEs/AEs of Housing Corporation. One DEO is already positioned

in every district (CLTC), They shall directly work under the control of the District Collector/ PD(H),

4. The programme shall be monitored through a District level PMU.

Functions of District level PMU :

a. Ensure•timeiy completion of INDIRAMMA INDLU Survey

b. Collectors may involve them in Super check of Survey c, Co-ordinate with District Co-ordinating officers in verification of village wise selected beneficiaries lists d, Assist District Collector in according Administrative Sanction and arranging Administrative sanction Orders to the Selected beneficiaries

e. Arrange for uploading selected beneficiaries to PMAY-G and PMAYU websites.

f. Departmental execution of Demonstration of houses incorporating low cost and affordable housjng technologies.

g. Conduct training of masons and guide beneficiaries in affordable and sustainable housing technologies,

h. Monitor grounding of INDIRAMMA INDLU.

i. Coordinating with SERP/MEPMA to start Fly Ash/SC Blocks making units, centring Units through Mahila Shakthi Groups

j . Co-ordinate with executing agencies for completion of

•Infrastructure works in already taken up 2 BHK colonies.

k. VVith respect to recentlv sanctioned infrastructure in GIO.Rt,No.892, Dt,26.11.2024 the Housing Corporation Engineers shall prepare estimates and execute the works.

l. Verify occupation of 2 BHK houses only by the allotted beneficiaries and to report to Revenue authorities for eviction of unauthorised occupants,

TELANGANA LIMITED,

C)

5. The District Collectors are requested to house the PD(H) and the district level PMU in the Collectorates/IDOCs itself by providing required space. TGHCL wjli supply the required furniture and computers for the PD(H) and the District PMI-L

6. The demonstration houses being taken up departmentally by the

Housing Engineers at Mandal level shall be utjlised for housing the AE(H) or the Mandal PM 'J. One of the DEO in the Mandal / Municipal office shall be entrusted with the INDIRAMMA INDLU Programme, He shall be the part of PMU at the Mandal / Municipal level.

Sd/-Dt. 18. 12.2024

Managing Director,
TGHCL/ Hyderabad.

C)

All the District Collectors in the State,

C) Copy submitted to the Commissioner, GHMC

Copy submitted to the Secretary to Govt., Housing Dept., for kind information.
Copy to at} the Senior Officers in TGHCL, Head Office.

//T.c.f,bro//

C)

C)

Senior Te h

echnical Consultant

O

C)

C)

C)

C)

File NoXGHCLvENßG/SCHEM7/202d.ENGlNEERl.NG SECTION

243

TELANGÅNÅ HOUSING CORPORATION LIMITED , H.NO.3,,6-184, STREET NO HIMAYÅTNÅGAR HYD-29

From:
Sri. V.P,Gautham, I,Å.S.,
Managing Director .

All the District Collectors
In the State of Tetangana.

Lr No: TGHCL/986/TDHS/Mason Training / NÅC /2024 dtd,2d/12Y202Å

Madam / S i r ,

Sub: TGHCL•Construction of Demonstration houses in Rural Mandal Head Quarters Certain Clarifications -Issued -Reg:

Ref: i

3. Lr /TGHCL/NLG/INDIRÅMMÅ INDLU /2024 (H) Dated .1 1 .1 2.2024 of the District Collector, Nalgonda,

NAC /2024 dated.09.i2.2024

Kind attention is invited to the subject and references cited above.

.Govt., no, 876 dated, i 6. 1 1 ,2024 of Secretary tp Govt./ , T,ROB (RHQC,ÅI) Dept.

2.This Office Lr no. TGHCL/986/TDHs/Mason Trafrling /

Mandal headquarters at a unit cost of Rs,5.00 (akhs (RsM ,62 lakhs central Share and Rs.3.38 lakhs State Share).

Detailed guidelines for construction of Demonstration houses at

The Govt.) in the reference 1st cited has accorded administrative sanction for construction of Demonstration . houses at Rural Mandal Headquarters were issued in the reference 2nd cited) duly U communicating two Model Type designs of 400 sq. ft. (one for a square o plot and one for a short plot width) along with structural des]gn• drawings of threa cost-effective technologies for guidance and with instrvclions to execute them departmentally by the Housing • Deputy Executive o Engineers.

Certain Districts have sought for clarifications on Ådministrative sanction) Technical sanction and exemption for deduction of CST for the work.

.Åccordfngly the following instructions are issued for execution of

O the Demonstration houses as recluested by the Deputy Executive
C) Engineers.

C)

Contd. , page.2. 105

Pagel,.

The District Collector will accord Administrative sanction for the Demonstration Houses at a cosg of Rs, 5,00,000/ per house and entrust to the Deputy Executive Engineer (Housing) for Departmental execution .

l , Peoples Estimate Shåll be prepared as per the local rates based on the quotatfons obtäfried from the traders who have CST number in the market.

2 (Thé ÉXécutfve Ehglneec / Deputy Executive , Engineer (H o us i ng) shall accord- technical •sanction as per the DéSIgns cornmuhicated and initiate the constructföh work,

. 3. For all the procuhed material like cement, steel, bricks, Shabad stone, doors; w.fndows, sanitary/ wate.t suppty/ electrical items, paints, etc shall . have the fnyoices Obtained An the hame of ' telangana Housing Corporation Ltd., CST ho, 36ÅÄFCT4920LIZ3, .Every invoice shall necessarily have the . GST nunnber of . the Trader, Thls will ensure that the GST for the material utilized is paid to the Trader and Che trader can show GST receipts as received from TCHCL (the purthaSer), for Accounting purpose.

4. CST need not be charged for Labour and non-traded materials.

The Demonstration houses shall have all possible finishings including flooring, electrification e.tc„ for irnrnediate occupation and showcase the easiness of construction using Innovative and CostEffective Building Technologies. These mode(houses will be utilized subsequently as the Office of the Asst, Engineer (H).

Alt the Project Directors (N)/ Executive Engineers/ Dy. Executive Engineers are requested to follow the above guidelines in construction of demonstration houses scrupulously.

Signed by VP GAUTHAM Dale: 20-12-2024 14:42:20
Reason: •Approved.

Copy to All the Project Directors (H)/Noaa1 officers (Housing) for information ano necessary action

Genera(Manager (Finance), TGHCL for information and necessary action.

// Attested //

SENIOR TECHNICAL CONSULTANT
TGHCL HYDERABAD

SS PATCH CLERÄ

DAT'E: 18.12.24

TELANGANA HOUSING CORPORATION LTD.,
3-6-184, URDU GALLI, HUMAYATNAGAR, HYDERABAD

From

V.P.Gauthamt I.A.S,
Managing. Director.

To

All .the District Coll eetors,
in the Sta.te,

Lr.No.800/TGHCL/PMAY-G/2024-25/24, 22/12/2024

Sir / Madam,

Sub:- INDIRAMMA INDLU
process of completion of e-KYC of all surveyors registered process of surveyor registration -- Reg.

Ref:- 1. Lr.No.DO.J-11060/07/2017-RH(M&T)-Part(2), dt.05.12.2024 of the Dy. Director General, MoRD, GoI.
2. T/o Lr.No. 800 /TGHCL/PMAY-G 2024-25/2024, dt:18/12/2024 addressed to the Dy. Director, MoRD, New Delhi.

p.MA..Y-C - Awaas+2024
Surv.ey-Comp.l•ete t.he

3. Message reCeived from Col, de 17. 12.2024

Kindly peruse the above reference and subject cited.

Vide the ref 1st cited/ the Dy, Director General, MoRD, Gol has informed that e-KYC of surveyors is a mandatory step •t-ö.ᵗ :capture the eligible färnil•les to PMAY o Awaas portal conducting survey through Awaas+ App.

In this connection it is inform -that it .is pioposéd to bag all the INDIRAMMA IINDLIJ houses going to be .t:aken up. in rut.•al areas be tagged to PMAYG to avail GOI

C) subsidy and accordingly the Gram Pa:nehˢayat Se.cretaries of the GP concerned were attached as •Surveyors to th.e GPS .f.or Con%duCtlng the Awaas+ survey, It is proposed to t:dÄdu.ctᵇ,).th'.é .s•urvey for the eligible ap'plicants of

C)" INDIRAMMA INDLU and to uplOad .tNém to PMA.Y -AWaas Portal. The Dist Collectors

O are therefore requested to „lhform •the. surveyors of all GPs to download the Awaas.+ App in their re.gistered mobiles and complé.t.e the e- KY C process of the concerned surveyor. <u>No further action other than e-K.YC shall be done in the Awaas+ App untii further orders f.rom •this Office</u>.. P.reseÄtly thiS •actiön is only fo•r the purpose of .e-KYC of the Surveyors but not for using Awaas+ App. but.

The. Surveyors following. steps -shall be followed i.n. doing .e-KYC:

1. To download the AwaaspIUSÆ202•4 app •fr.om the below.we.b pag.e I-ink

h / p rn•a y g. nit. i n./:h eti•ay./.iiifö ap p. h tni I

online Face awr$h. App(V1.1.0_pre Pro.d) - Linl<

2. Sign up / login with their Aadhar numbers and a uthe n,tieate
3. Face identification has to be done.
4. A pop-up will show on mobile screen that, e-KYC that? •e-KYC successful
5. Then, create PIN and confirm PIN.

Yours Fly

Sd/-22.12.2024
Managing Director.

//True copy//

Nodal Officer,
PMU-PMAY.

MAY

Sd%-22,

TELANGANA HOUSING CORPORATION LIMITED, HYDERABAD
H.No.3-6-184, Street No.17, Urdugally, Himayathnagar, Hyderabad-29.

CIRCULAR

Circular No.1116/TGHCL/E&P/INDIRAMMA INDLU/2024, Dtd.23.12.2024

Sub: INDIRAMMA INDLU- Mobile App-Verification of applications received under Prajapalana- Further guidelines issued- Regd

Ref: 1. GO MS no 7 of TR&B(RH& Ca.I) dept dt 09-03-2024
2. T/O Lr no 1116/TGHCL/E&P/ INDIRAMMA INDLU dt 09-12-2024
3. T/O Lr no 1116/TGHCL/E&P/INDIRAMMA INDLU dt 10-12-2024
4. T/O Circular no 620/E&P/INDIRAMMA INDLU/2024 dt 18-12-2024

10,12004

Ki:ncl Qtcen.:tiou•.) Vs -to. the. su anci releverl.ces cited where in detailer] guidaJin.es were iss^l•neel for conduct; OJI Survey applications

C) receive.d during Prajapalan.a for of' houses INDIRA MMA.

INDIJU Schenne.

Based on Ch.e teed -VeC:eivecl the. District C.)oilectors and t,h.e P:lvtÜs .•pf S.tat•e.. D strict Units,•the followi ng further guidelines are for n g.

1. It is reiterated that. •this process ol' ('.01 ng c.er.L&'Qin. details through Mobile App sis NOT merely a survey exefci•se but •actually verification of the details. furnished by the applicant. C)

2 The sole resbönsibili.ty •Tor the acc.uracy (-:uncl co tnes•s 0T thedata

C) entere€l •into the Mobile App lies with the, Surveyor concerned) who have been given proceedings by the Collector and in whose names logins.loy hayc . been g.iv,eli.

3 'Phe purpose the INDIRA.MMA •App is to capture the house povr.•.rty X)'l'

CD the applicant. So, it is necessary to assess the nature l'.•h e house where

(D tho is. presently living iri The objective, the survey

js not just •the detåils -of•• •the but c.o veii.fy a-fid validate -.the.

by •the applica.nt duri:n.g•. Prajapp

J) •with physical verification and local •This verifica'•tiöh enables

rrivingat c•lᵗye• CIGtua•l fa.fiiiliß$ •w,ho .neecl construct.iOn assistancefrom

(Dover t.

C)

(U

4. is to provide assistan:ce '2€) •?.ë,

houšes. 4 .yeą-cs,, .a, .cvitical

('îh:e of -th•iô ' sche:nre-.

led ii).n • the Ṭh e

.'ô.F . i:s• lakh

Even

•ancî

seruă,nîzed. ťl-m:eăd boaṭ•.• .AŘy of Ca verificacion

.'.@ąrć Ahas ťhe •1NDItRAMMA->App •Cô nyclke. Al

of: 'irna'ge.s• tó rari with da l•.a

and v,i.tṣl. .th,c

Suvveyor• process.

9. • ,ĄÐp• Che .ṭrue. na:tᶠar.e, .h:oułse Whe re

ol

:sonne ranclorn

1,LLVJiSffRA.ṬTO'-NS

.îlîi: 'â,

7'

_h•ilsṭory• as.. pÎo.Qf oi' .paicl../•

h ou.śe re he •nływ., • ŢWć$îfrŕŁig•.cs •čób.tur•e.d.

app $Q3'OłuŔ'f;. Vi'•l.'J be

- Making the State Hut-free is the first priority of the Government before providing houses to all eligible houseless. Hence it's necessary to capture the nature of roof and walling of the house wherein the applicant is presently living. The second picture shall necessarily capture the type of roof and wall where the applicant is living in.
- An applicant may mislead the surveyor by showing the cattle shed or open kitchen to take picture of that structure as the place of his living. Therefore the Third Picture taken inside-house shall necessarily capture his household belongings.
- This can be arrested by observing his in- house belongings.

They dopi.ct the •true; in.come status of the applicant. .There fo•r the -Chird pic t.)f •house •necessarily capture. his C) household be[1]longån.gs.

C) A p.pliö•ant may 'land or: some. Clove rn t land house.. (Phe surve.yö:r establish the Ian'd belongs to him/his tä:mi.ly.

Change ªthe place of cofis.ti•.uctio.l.n on

Of band is to be: Geo …é•pfiS't.tuctlør.) and, pay.men ts.

8. T:he GP w.i.ll, have t.h.e complete knowleclge of

sanction as that particular pr

fenced for further construction

Secretary/ Ward officer will h

C) population, number per m.ünent houses aryd the. rough

.requirem,en€ -of' •the. .•f.o.v the poor in their CP/Wa.r.d.le/Sh

also maintains the house. register.. T.h the Col.le.e.tor•s weve

.req•uested co engage •Che• Panchayat Secretaries / Warcl officers who are

C) vvell •åequ,ain bed •with. thte e•cöhornica.i and living co-Y)d.i lions ol' the

C) f.ami.t:i in. ages a.Fds.

0. The survey/verification concbuc:ted by • GP Secretary/ .W•æd office r

will be further checked for its quality;

C)by the i. by random super check of 5% of the dae cap MPDO/Mpl Commissioner concerned.

(3. ii. by the Gram/ Ward Sabha

C010ector iii. by a District level officer appointed by the Distr

surveyors iv. System level checks (360 degree/AI, etc.,)

10.Therefore the

CG•.P Secretaries/•Wa$d. Offi'ce.rs/ a'ny other officer designated by Cö:ll'ector) have to be responsible and meticulous in captu ring t'•he true, authenticated and verified data. •the Surveyor (GP Secretaries/Ward Officers/any other officer designated by Collector)

wili •be totally r.esPo;nSible for the correctness of data cap.tured through App. Tehe su.yrve'y,oj-s may be (horough•ly these

matters. throuC,h •a: Viß.e:o •Cohference.

Sd/- Dt: 23.12.2024
MANGING DIRECTOR

(7

A)) the Disttiot 'Collectors in the State•
The Commissioner 'G.HMC

Copy to al:) the Project Directors (1²1)/ D

NO S in (he State.

//T.c.flb,o//

Technical Consultant

C)

•Se.niqr.

GOVERNMENT OF TELANGANA

0 GENERAL ADMINISTRATION (GENERAL, L&C) DEPARTMENT

Memo Nor582/Genl, L&C/2025 Dated:18,01,2025

Sub: Praja Palana - Instructions with reference to new Ration cards, Indiramma Indlu and Indiramma Aatmiya Bharosa - Reg,

Ref: Instructions issued dated: 10.01.2025.

In partial modification of instructions issued dated 10.01, 2025 following further instructions are given w,r.to new Ration cards and Indiramma Indlu.

1. New Ration Cards: In Grama Sabha, following information available with Govt. will be taken up:

i . a) SEEEPC data: already communicated (6/68,309 cards; 11/65,052 members) on 12/01/25 - to be validated.

b) Details of remaining applications (41.25 Lakh HHS/ 1,36 Crore C) Members) with remarks will also be communicated to

Collectors for reference on need basis,

C)

II.Pending applications for Member additions (received through

18,01,033

C) Some MeeSeva/ePDS): of these applications covering 12/07,895 are already Cards; verified. Balance members verification-

should be completed.

i i i . In Gram Sabha meetings (21st 24th January)/ collect fresh o application for New Ration Card/ Member(s) addition, from those Households/ Persons who could not give application during earlier rounds. The applications received for ration cards either for new ration cards are split in the existing ration card also to be taken into

C) consideration.Please ensure that the following details are collected in the fresh applications during Grama Sabhas

O

a. Name of the HoF& other family members
b. Aadhaar Numbers of HoF& other family members
c. Caste
d. Mobile Number e, Address

i V. Applications for new Ration cards/ Member(s) addition, may also be collected through Praja Palana Seva Kendras (PPSKs)

C)

2.1NDIRAMMA INDLU

C)

C)

C)

C)

tii Details of remaining applications (45 lakhs) with remarks will also be communicated to Collectors for reference on need basis,

IV .In Gram Sabha meetings (21st 24th January), collect fresh application from those Households/Persons who could not give application during earlier rounds.

Please ensure that the following details are collected in the fresh applications during Grama Sabhas

a. Name of the HoF& other family members b, Aadhaar Numbers of HoF& other family members
c. Caste
d. Mobile Number
e. Address

V. Applications for Indiramma Indlu may also be collected through Praja Palana Seva Kendras (PPSKs)

3. Other Instructions for Indiramma Indlu & New Ration Cards: C)

i, Gram Sabha shall be used as a consultation process to

C) a, Validate the list

b. Collect fresh applications from potential beneficiaries who might have missed earlier opportunity of giving applications
c. Gain feedback on all related issues.

C) i i . Since fresh applications are also being collected in the Grama Sabhas/PPSKs, publication of the final list of eligible beneficiaries will be made only after due verification of applications received during Grama Sabhas/PPSKs. Instructions regarding the final publication of the list will be issued separately.

4. Indiramma Aatmiya Bharosa :

i.Benefits witl be transferred to the female members' bank account of the landless agriculture farmers family to this effect enabling

C) provisions is provided in the web portal already communicated to all the District Collectors and DRDOs.

C) ii. The benefit under Indiramma Aatmiya Bharosa will be extended to 156 panchayats which were merged into municipalities and Municipal corporations for the year 2023-24,

C) SANTHI KUMARI,

CHIEF SECRETARY TO GOVERNMENT To

Atl District Collectors & District Magistrates
The Agriculture Department
C) The Food, Civil Supplies & Consumer Affairs Department
The Panchayat Raj Department
The Revenue Department (

The Transport, Roads & Buildings-Department Copy to:

PS to Pri Secretary to Hon'ble CM

PS to Chief Secretary

PS to Secretary to Government(Poll) General Administration Department

// FORWARDED BY ORDER //

M. Gopal
SECTION OFFICER

C) 1 15

C)

TELANGANA HOUSING CORPORATION LIMITED, HYDERABAD

H,No.3-6-184. Street No. 17, Urdugally, Himayathnagar, Hyderabad-29..

CIRCULAR

Circular No. 1116/TGHCL/E&P/1NDIRAMMA INDLU/2024, RAMMA INDLU/2024, Dtd.18.01.2025

Mobile App-Verification of applications ıpalana- Further checks & corrections-

Sub: INDIRAMMA INDLU- received under Pbajäpa:lahay Further issued-Regd

Ref: MS

1 . GO no 7 of of TR&B(RH& Ca.1) dept dt 09-03-2024

2. T/O no 1116/TGHCL/E&P/ INDIRAMMA INDLU dt 09-12-2024

3. T/O Lr no 1116/TGHCL/E&P/INDIRAMMA INDLU dt 12-12-2024

4. T/O Circular no 620/E&P/INDIRAMMA INDLU/2024 dt 18-12-2024

5 This Office circuåar No, cular No.1116/TGHCL/E&P/INDIRAMMANDLU/ 2024/ Dt.23.12.2024,

. Kind attention is invited to the subject and references cited where in detailed guidelines were issued for conduct of Survey of applicatWns received during Prajapalana, Necessary precautions required to while conducting survey were also explained with C) ference 5th cited.

Even after these detailed Instructions, it found during the super check by the MPDOs/MCs, field inspection of supervisory officers and system generated anarnoly lists generated in the system that, mis:ba.kes were found in. verification done by the surveyors.

In order to carry out the corrections to such mistakes, Edit opC) were given in respect of the following: .

I j Change roof type frorn i dam•aged roof covered tarpaulin sheetUe / ' C) plastic roof) to other categories.

2. Change of wall type only fo.r MUD Wall,

3, Change of present residential status for appllcahtg in Rent.

C) It is therefore requested to take a certlflcate from the•surveyor that he/she has completed •the verjficatlon(survey) as per the cir.cUf•ar

C) instructions given by the Houslng Corporation with ail clue café a•fid

completed all the Edit/Correctlons requ!red before display of the prioritised list, before the Grama/Ward Sabha,

Encl: Il Certificate by surveyor

2, Certificate by PD(H) Sd/-Dt, 18.01,2025

MANGING DIRECTOR

All the District Collectors in the State
The Commissioner GHMC

Copy to all:the Proj.ect Directors (H)/ DNOs •in the State.

./ted//

Exec: *figinee2g0eeer

Certificate

This is to certify that the verification of applications received •under .o Prajapalana for sanction of houses have been verlfled by the Sl;JBieyor (GPI Secretary / Ward Officer Other off(ceFs approved. by the District Collector.) in full shape.

5% of the applications have been got Super checked, •by '"the: MPDO/Munjcipal Commissioner concerned and rectified, List of Anomalies C) identified and communicated by •the Head Office are also Verified and got .rectified,

C) The final list of eligible applicants js ready for placing before .tti.•e• Gram /

C) Ward sabha

Date:.....

Project Director
Telangana Housing Corporation Ltd
.....Disttfict .

C)

C)

C) .

ధృవీకరణ పత్రము

..... జిల్లా ..... మండలము / మునిసిపాలిటి .....

ము / వార్డు నందు ప్రజపాలనలో ఇందిరమ్మ ఇండ్ల కొరకు వచ్చిన దరఖాస్తుదారు వివరములను రాష్ట్ర

గృహ నిర్మాణ సంస్థ circular No **1116/TGHCC/E&P/INDIRAMMA** INDLU/2024, తేది. 23..12,2024

లో వివరించిన విధంగా, స్థానికంగా పరిశీలించి అన్ని సవరణలతో ఎలాంటి పొరపాట్లు లేకుండా

Mobile App నందు పొందపరచడ మైనది.

INDIRAMMA

fNDÍRAMMA Mobile App & ÔbdáOOá Oódóà)0Q5ఎలాంటి లోపాలు doo

కలించడమైనది.

: .....

సంతకము .....

adSQ1)6 పేరు .....

.....

గ్రామము .....

మండలము .....

TELANGANA HOUSING CORPORATION LIMITED/

H,NO.3-+184, STREET NO 17 HIMAYATNAGAR HYDERABÅD v 29

To

1. The Commissioner

Director, MEPMA .

AC guards, Hyderabad

Sr: V P Cautarnj i.A.S

Managing DirectorRP,Hyderabad .

Lr No.2304/TGHCL/E&P/Centerlng Unlts/Indlrammma Indlu/2024,
Dt.28.01.2025

Sir,

Sub'. INDIRAMMA INDLU- Construction of 4/50/000 houses through beneficiarie9 Establishment of Centering Units by the Mahiia Shakti/ Youth Groups in Villages/ Towns- Scheme communicated for wide publicity and implementation- Reg.

Ref. Go MS no. 71 dt 09.03.2024 or TIR&B dept (RH&C.AI) Dept./ Govt., of Telangana,

-000-

I invite kind attention to the Subject and reference cited above. The Govt. / has announced commencement of INDIRAMMA INDLU programme to construct house to all the houseless families in the State over a period of 5 years and announced construction of 4/501000 houses in the first year at a unit. assistance of Rs 5/00/00/- per house with 100% subs!dy. It is a continuous program for next S ye?rs and houses will be sanctioned

In qlnno;t the vlllages/ Towns,

Ali the houses are proposed for construction with RCC stab and Centering material is scare material available in villages and small towns. It is proposed to take up around 2800 houses In each Mandal / Munlclpality In the State in next 4 years. Hence there will be ö huge demand for such Centering materials.

In order 1'0 augment the supply of Centerlng material in villages, it becomes

C) necessary to have supply of at least centering required to roof 5 INDIRAMMA INDIC) al' once exclusively in additlon to the exlstlng supply In every village / habitation.

A scheme for establlshment of centering material Units is communicated here with for wide publicity and sensitizing and encouraging the Mahila Shaktht groups /

Youth groups to establish the Units,

The proposed cost for establishing a production Unlt is @ Rss 20 takhs, It C)

estimated that the Unit can recöUp the. investment along with interest and overheads in 3 years of establishment of Uniti.

C)

Scheme for Steel Centerlng materlal of 2500 Sft

I	Cost oi CantäFlh9 requlred for 2500 Sft lhc!udlng sheets Of dlffereht Props, Adjustable,)ack5, Horizontal Bracings, N LP Shaped jacks / T Bars etc.,	Miscellä neous Cost towards arrange ments

for sucking

Total — Rsl 70/000/ 100 Sft — Rs .17.50 La k hi s

Il Return of Incö(he

- Rent per month (5 Units) i.e., for 2500 Sft — Rs.2,50 Ckahs
- Rent per Y.ear (for 15 Cycles) Unit — Rs.20.00 Lakhs
- Loss of bolts, hlnges, and repairs to braces, jacks etc, J complete — R5(20/ Sfl• — Rs.O.50 L akhs

Expected retclrn per year or IS cycles

- No. of Cycles the centering can be used with the above care ahd maintenance — As. 7.50 Lakhs
- Expected return after maintenance — 0.75 Lakhs
- Whole life cycle (ICÖ cycles/ 7. years)
- Salvage value — Rs, 6.25 La khs

100

as, 43 75 La kh s

Rs. 2.OQ La klxs

R5,45.75 Lakhs

Yours faithfully
Sd/- 28.01 .2025
Managing Director

Copy to all the District Collectors for necessary action in the matter.

Copy submitted to the Secretary Government, Housing Deoartrp,ent, Telanc:ana.

// Attested //

Supdt. -Engineer (Schemes)

TELANGANA HOUSING CORPORATION LIMITED, HYDERABAD

H.No.3-6-184. Street No. 17/ Urdugally, Himayathnagar, Hyderabad-29.

CIRCULAR

Circular No.1116/TGHCL/E&P/INDIRAMMA INDLU/ 2024 Dtd.25 01.2025

0 Sub: INDIRAMMA INDLU- Mobile App-Verifical'ion of applications received under Prajapalana-objections received in Lists 1&2 in Gram/ ward sabhas -further instructions issued-Reg.

Ref:1. GO MS no 7 of ΓR&B(RH& ca.l) dept, dt.09-03-2024

2, Govt. Memo no 6375/RH&C.A1/2024 de 12-12-2024

3. This Office circular No , l l 16/TGHCL/E&P/lNDIRAMMANDLU/ 2024/ Dt.23. 1 2.2024.

4, This Office circular No. 1116/TGHCL/E&P/lNDlRAMMA INDLU cit. 18.01.2025

Kind attention is invited to the subject and references cited.

C)

Vide reference 2 nd cited detailed guidelines were issued for conduct of Survey of applications received during Prajapalana by the Surveyors.

Vide reference 3 rd cited, Edit options were given to carry out the corrections on the mistakes found during the super check by the MPDOs/MCs, field inspection of supervisory officers in respect of the following . C)

1 , Change roof type from damaged roof covered tarpaulin sheet' / I C) plastic roof' to other categories.

2, Change of wall type only for MUD Wail.

(3 3. Change of present residential status for applicants in Rent.

C)

C) The eligible prioritized lists those having "w.ith house sites as List I" and those eligible not having houses sites as List Il" were placed in MPDO/MCs logins for downloading and display in Grama Sabhas C) conducted from 21-01-2025 to 24-01-2025 The list of applicants who

C) were deemed as "in- eligible based IT)0bile app survey and 360-degree verification, along with specific reasons" as List Ill were communicated

C)

C)

to District Collectors and Project Directors(Housing) for record. The same has also been made available in MPDOs/MCs logins.

The following Post Grama Sabha steps are envisaged for p.urif.ying the final list of eligible applicants

1. Verification of Objections raised in the List I and List IJ lists:

a) Removal of ineligible cases by thorough verification of objections on due local enquiry and record verification.

O

b) 100% of the entries in list-I shall be verified suomoto to weed out ineligible beneficiarjes, if any, as •the criteria laid out in GO M^{s}s. NO. 7

The following points rnay be verified during field enquiry

VVhether the applicant is physically residing with family in the village /ward or he/she has

ii. Whether belongs to APL with reference to not: only of his/her income/land holding but of the entir.é 'fämn-y.

iii. Whether he/she along with any of the famjl.y member (including son/daughter) is a Government [Corporate white collar employees

C)

c) Edit of Type of Roof/ Wali and owner ship after field verification 2, Clairns for transferring applicants narne frorn List Ill to List I/ List Il:

In case of genuine eligible cases, option to convert them from List

Ill to List I/ List Il is availabie. However, this has to done after thorough verification

MPDO / MC shall give specific reasons for their eligibility and conversion from L3 to Ll/L2 list, duty cross verifying:the reasons shown in L3 list

3, Necessary provisions for entry by the MPDO/MC has been provided for their specific remarks, Once they enter their remarks, it w.i ll• sent for the approval by the district collectors in District Collect@hs logins.

4, It is once reiterated ᵍthat the surveyor (GP Secretaries/ Ward officer/ any other officer designated by collector) is the person to vouch the correctness of the data captured through App. So, they are liable for disciplinary action if any erroneous data is found during the super check/ field verification/Grama shabhas.

Care shall be taken to ensure that no eligibie person misses out and no ineligible person is sanctioned a house.

Alt the District Collectors are requested to complete Che above process .expeditiously

Sd/-25.01 .2025
MANAGING DIRECTOR

CD

C)

C) All the District Collectors in the State

The Commissioner GHMC

To all MCs/MPDOs (through the District Coilectors)

Copy to all the Project Directors DNOs in the State.

C)

C)

//Attested//

Superintending Engi eer

(J

గాణ0$^{70\,9}$<006 కార్పొరేషన్ 00*36 ,హైదరాబాద్

I-I.No.3-6- 184. ^{s}rôë5 50.17, eă)db, Săroă-)5ód6, '0^{0}50%3^{0} 6-29.

0 .

K)ăDbse6

నం.1116/TGHCL/E&P/INDIRAMMA INDLU/2024,

Oâoă)o: ›: ఇందిరమ్మ ఇండ్లు - మొబైల్ యాప్ - ప్రజాపాలనలో దరఖాస్తు

óô:25.01.2025

Oô}oó — Că) / .3d-) K)duS I ă)ôoă-D 25 văsoóo•oë ócSOô

ఆదేశాలు జారీ.

(7) నలు:1. GO MS నం.7, TR&B(RH&ca. i) óô: 09-03-2024

2. ప్రభుత్వ మేమో 50.6.375/RH&C.A I/2024. 1 2- 12-2024

3. ఈs°o•suoă) {odDbs.06 00.1 1 6/TGHCL/E&P/INDIRAMMA

[NDLU/2024s óô: 23-12-2024

4 s^{c}opos 00. 1 1 6/TGHCL/E&P/INDIRAMN'tA IN^{i} DL(J.

óô: 1 8-0 1 -202 5

C)

పై సర్క్యులర్‌లలో ప్రాధాన్య సూచనలు a)oo3.A) Ca)/ og K)du5

e.n3soóoe-)ră.) OôŞÔoódo (ă)ôoC,) Qósdo Bôôoô.

న 205 ప్రజాపాలనలో eDooo udsg,oo సర్వే నిర్వహణ కోసం సర్వేయర్లకు వివరణాత్మక మార్గదర్శకాలు ఇవ్వబడ్డాయి. ఈ మార్గదర్శకాలు సర్వే నిర్వహణ ae5 సరిగ్గా క్రమబద్ధంగా సాగేందుకు రూపొందించబడ్డాయి.

సూచన ప్రకారం, MPDOs/MCs సూపర్ చెక్ సమయంలో మరియు పర్యవేక్షకుల ఫీల్డ్ ఇన్‌స్పెక్షన్ లో గుర్తించిన తప్పులను సరిచేయడానికి ఎడిట్ ఆప్షన్స్ ఇవ్వబడ్డాయి. ఈ తప్పులు సరిచేయడానికి అందుబాటులో ఉన్న ఎడిట్ ఆప్షన్లు ఈ క్రింది విధంగా ఉన్నాయి:

6a ăródór^{v} uo o

C)

1. J' do" Torpolin sheet / Plastic sheet roof'1 వంటి e.Đd50 Thatched roof"

dg•vš do.

2, Mud wal!" కోసం మూwall (5<0మూ

3. uósô ప్రస్తుతం కిరాయి (Rent) నివసిస్తున్నట్లయితే, ప్రస్తుత నివాస ,0?)^{5}

C)

C)

C)

C)

" bS J rp Udé šbô

ఇంటి స్థలాలు ఉన్నవారు" మరియు "లిస్ట్ II గా అర్హత కలిగి ఇళ్ల

సలాలుe.30ěrd.) ii జాబితాలను MPDO/MC u లాగిన్‌లలో dt S&Č,చేసుకో

á)ôaíh) 21-01-2025 24-0>2025 ódá నిర్వహించిన గ్రామసభలలో éöô)0ócrOš

3ĽOe5 Ods óJôoíi-) 360-4 పరిపాలనా ఆధారంగా eŠö e-30 odsdĎe bs ill

dJÖoôocrÓ-Ä-) ó-)ôaĎĽ ఇట్టి జాబితాను రికార్డు కోసం é? še3áŠ.) á.)ôaí)-) ĽôšŘO

(KJTb06). MPDOe-»/MCల లాగిన్‌లలో కూడా ఇదే

బాటుôoäüčoô,

ల పూర్తిOaOxóuË, Tó.)Oä తరువాత6) god 0.5ôoôä .dése»

dóOóožô äoLDoÔ.

జాబితాI ó.)ôoí» II öóôôó esdsoéT0 dJ5Šdľô,

a) 30š ó)ôoí» ô5t-O ó)5šőcaě అబ్బంతäJ5šôoddo uóőä.)ó Ůoôoddo,

b) జాబితా-Iలోని 100% ásd»orp 4ě5šôdďb GO Ms. NO.7లో

పేర్కొá) éó-pro éTdo అనర్హమైన లబ్ధిదారులను ఈ ěoô Oôéboô

&uôocrb.

దరఖాస్తుదారు గ్రామం/వార్డులో šĽn00ôS e'ösorp నివసిస్తున్నారా లేదా C)

పేరే చోట నివాసిస్తున్నారా?

తని/ఆమె ఆదాయం/భూమిని మాత్రమే కాకుండా మొత్తం šbOôoeľfOě C)

OouoôôO APLô OoôáDT?

అతను/ఆమె కుటుంబáaíse&ఎవరైనా (కొడుకు/కూతురు)

/కార్పొరేట్ ěeS 306

ädsdoచేస్తున్నా

c) OôOšQS ócrsó ఎకప్పు/గోడ Udo á)ôaí.) o$°aó.ýáso ĽäšV áSdD

2 , III óoč I /ÄT lí కు దరఖాస్తుదారుల Od)á) uôb చేయడానికి

koľ)Se-D.• OBě.)ó odé ôó) šKĽU OŘoí)ô5. aröu° ill జాబితా I/జాబితా

Óoč II g-) వారిని మార్చడానికి óáŮ అందుబాటులో áoô. ooĽÖ, ˙aô dJ5šdca dľs-é

మాతమేóofrb,

C)

Q)

C)

MPDO/MC ö⁰ ô ešöš.) ä)ôos.» L3 ooč LI/L2 ó.rděcrOě నిర్దిష్టరణాలను ôv3ô, L3 పాచితాలో చూపినs•droó áéóöorp 4ě5šÔotrÔ.

3. MPDO/MC š login entry üösočoô. Remarks నమోదు చేసిన తరువాత,Uô šüšő erôSueS aer šüšöఆమోదం కోసం పంపబడుతుంది.

4. oíp5 SšôoÔä Čer యొక్క ఖచ్చితత్వాన్ని GSJ5šÔoÖ Odsa.ú)ő (eb béU6e»/r6 uôsºô/ šeJ{6 OO$tboÔÖ oôTô) uo ó)SÖô పునరుద్ధాటించబడుతుంది.sºe*,

వెరిఫికేషన్/గ్రామసభల óóaío& ఏదైనా తప్పుడు డేటాšíOÄáäč4ö వారు క్రమశిక్షణా చర్యకు eľäsö öbůºdô.

ä óĽ తప్పకుండాó-)ôaí» oáŕüósôě ˹apమంజూరు చేయబడకుండా ä5%ĽŠrb.

ëó éÔců-3á) ésőrp dalyuO uo) še3šgešô Uösőá.

Sd/25.Oi.2S ä-)3é06డిరెక్టర్

šüšdé రాష్ట్రంలోని అన్ని జిల్లా క
కమిషనర్ GHMC
అన్ని MCలు/MPDOలు MCu-)/MPDOušD (&ez šüšgద్వారా)
C)ëdš6 (H) /DOEVO రాష్ట్రంలోని అన్ని ప్రాజెక్ట్ 95.

//Attested//
30/1/25
Superintending Engineer

Q)

C)

C)

File No.TGHCL-ENGG/SCHE/38)2024-ENGlNEERlNG SECTION

TELANGANA HOUSING CORPORATION LIMITED, HYDERABAD

H,No.3-6-184, Street No. 17, Urdugally, Himayathnagar, Hyderabad-29.

CIRCULAR

2024, 01/02/2025

	r N 11			p ND RA MA	DL

Sub: INDIRAMMA INDLU- Mobile App-Verification of appli received under Prajapalana.- Grounding of houses after according administrative sanctio'hs only - instructions issued-Regd

Ref: 1. GO MS no 7 of TR&B(RH& Ca.1) dept dt 09-03-2024

2. This Office ar No.1116/TGHCL/E&P/INDIRAMMANDLU/ circular 2024, Dt.23.12.2024.

3.This Office circular No.1116fTGHCL/E&P/lNDlRAMMA INDLU dt 18,01.2025 and Dt.25r01.2025.

4. Administrative sanctions accorded on Dt.26.01.2025 @ 1 village per mandal,

Kind attention is invited to the subject and references cited.

Vide reference 2 nd cited detailed guidelines were issued for conduct of Survey of applications received during Prajapalana by the Su rveyors.

Vide reference 4 th cited, Administrative sanctions were accorded by the District Collectors @ 1 viliage per Mandal after reverification of the Ll,L2 and L 3 lists. During the re-verification by the senior Officers from Housing Corporation, it is noticed that administrative sanctions have been accorded to certain beneficiaries who had already started construction.

C) It is reiterated that payments to beneficiaries are based on stage of work, as per GO Ms no, 7. Geo-tagg photos of mark-out stage has to be taken through the Indiramma Indlu Mobile App, after which t beneficiary will become eligible to receive payments on c) completion of basement, lintel, roof, etc. on capturing photos of those respective stagés on the mobile app, Hence, construction under progress will NOT become eligible under the scheme and only fresh construction is a permissible. Hence, there is question of

C)

according sanctions against preexisting or ongoing constructions. C)

Hence, it is informed that, the houses shall be started from ground zero only after issue of Administrative Sanctions by the Dlstrict Collector and after recelpt of individual proceeding copy and after capturing the MARK-OUT stage photo on the Indiramma Indlu Mobile App.

DIRECTOR TGHCL, MANAGING DIRECTOR O/O TGHCL vp GAUTHA•M, MANAGING C)

To,

All the District Collectors in the State

The Commissioner GHMC

Copy to all the Project Directors (H)/ DNOs in the State.

C

Signå&byVP GAUTHAM
Date: 06-02-2025 14: i 8:15

Reason: Approved C)

TELANGANA HOUSING CORPQRA%TCON LIMITED HYDERABAD.

HÄNo. 3-6-184, STREET#1'1r FEMAY.ÄTHNAGA•R/HYDERABAD-500029

Memo,no 1116/TGHCL/E&P/ INDIRAMMA INDLU/ 2,024 dt,f.02.2Ö25

Sub: Implementation of INDIRAMMA INDLU- monltorjng- Project Directors Conferehc.e .on Dt.04.02.2025 at TGHCL/ Hyderabad date of intimation- Reg.

Ref: This office circular Noaeven,Dt.20.0

Vide reference cited/ it was informed that on every TUesd•ay 'there will be a video conference and every 1 st Tuesday of the moh'th Physical Conference will be held on INDIRAMMA INDLU and other issues..

Accordingly, the PDS conference of February 2025 is schedUled on Dt.04.02.2025 at 11.00 AM in the Office of the TGHCL, head Office The following is the agenda proposed for the rheeting..

1, INDIRAMMA INDLU - General instructions and feed back.

The signed original hard copies of selected' vittages (as per the following updated spreadsheetdata)(https://docs.google.com

[spreadsheets/ d/ 1 OsApup 3Z2BQ7HsOAh5XEGJ8 _LRsvr•5iM/ edit?gid - 2020905703 #gid =2020905703).

2. Progress on demonstration •of houses.

Fornnat enclosed

3. Progress on establishment of Block making units by the Mahila

Shakthi/Youth groups in villages,

C) 4 , 2 BHK- Progress on Basic amenities sanctioned vide GO. 892. for

Rs. 196 crs, Please update the spreadsheet int.-tvs

//docs.google.comspreadsheets/d/IH H Q Q q q i.GssvVY404T

Vld6dOf86XOMp)z-6ev-fPWmPc/edit?usp=sharing o 5. Selectiont allotment and occupation statusnf 2BHK Programme.

Please fill the spread sheet (https://docs.google.com/ spreadsheets/d/ 1gdap0djDM0qtFmTGu51X5HFankC3L8r6I8doM5mcqHU/edit?usp=shari Please

e ng)

6, PMAY-U AT'Rs pending with Districts.

C)

and' él<YC päh&di'rtg, s Tittdek by the suj;yéYér

1.

the re-

svgqadßh on^{u} 03

CopysubmtttteWto.th•e •G'H:MC. for. •kind informatipn fdfrlikirid

File No.TGHCL-ENGG/SCHE/35/2024-ENGINEERING SECTION

Minutes of the Video conference with Project Director's held by the Managing Director on dt.1 2.2.2025

17/02/2025

1. Phase I (Pilot) villages

- In 1st phase 562 villages @1 village per Mandal have been selected and manuai proceedings were issued. The online entries are reviewed district wise. Poor performance at Mahabubäbadl RaJanna Sirici!lat Manchiryal, Suryapet, Medak, Mahaboobnagar, Medchal Maikajgiri, Vjkarabad and Narayanpet Districts, The same has to be entered online from MPDOs logins to District Collector's logins immediately

- The grounding position of Phase —I sanctions reyiewed District wise. The PDS instructed to update the grounding status in spreadsheets and send the photographs of started houses. The PD Suryapet informed that pregrounding meetings are conducted in 3 villages and continuing the programme in all other villages of the District to start the houses. MD instructed to follow the strategy of pre-grounding meetings in all the villages, to educate the beneficiaries on the type design and payment stages.

(Action: Project Directors)

All balance villages

C)

In 5% super check, top 100 colonies with high rejections during super-check were sent to PDS for verification.

The MD asked feed back from each of the PDS on their verification, why the surveyors have not verified properly and the actual situation while doing the survey/verification. PDS stated that most of the Joint family cases though they are living jn RCC slabs, C) to cover their family members son's shown jn rent and photos captured from verandah of the house.

C)

C)

MD took serious view on the failure of surveyors as the percentage of rejection goes to 30% in some villages and action must be initiated against the such surveyors. In all these villages sent for verification, report has to be submitted by PDS to Collectors with copy to head office. Sri Balram Chief Vigilance Officer to follow up on these cases, This SOP is to be folllowed for afl exception/anamoly reports sent by head office or for adverse news

items or for such complaints forwarded by District Collectors,

C)

The PDS have to learn lessons from the faüure of Old tndiramma Housing. CE to prepare a powerpoint presentation on such glaring cases of misuse in the Oid and new Indiramma Scheme and attach as annexure to this IY)inutes.

On similar lines, scrutiny and suo-moto verification of Ll lists and disposal of claims, objections of all other villages(apart from Phase-I villages) shall be completed by February end. (Action: PDs)

3 . Demonstration houses(DH):

Progress: Ali the 500 Demonstration Houses are to be completed by February end. Only 330 are grounded so far.

Adilabad: 6 houses grounded out of 18 houses permitted

- Jagitya[: 3 houses grounded out of 15 houses permitted
- Jayashanker Bhupalpally: 3 houses grounded out of 19 houses
- permitted

- Manc Mancherial: 7 houses grounded out of 15 houses permitted
- Nalg Nalgonda: 3 houses grounded out of 25 houses permitted
- Nirm Nirmat: 5 houses grounded out of 16 houses permitted

Cost-effective technologies for foundations, walling, and roofing should be strictly adopted for these houses. The primary objective of the demonstration houses is to provide a understanding of the

C)

O

cost and incremental development of houses by beneficiaries. These technologies should be utilized in the construction of Indiramma Indlu to help reduce construction costs. These demonstration houses shall be completed in full shape, within the available unit cost of Rs,5 lakhs.

(Action: Project Directors)

4 2 BHK basic amenities GO 892:

➢ Reviewed the status of progress of Basic amenities sanctioned in 2BHK

C) colonies under Phase-Il and directed to an Project Directors to visit the 2BHK colonies and assess the works requirement based on the status of completion of houses in the colonies.

(Actiori: Project Directors)

SUMMARY

C) 1. Update online from MPDO ˡs logins to Collector's logins for phase-I sanctions

C) 2. Phase —I sanctions- to be brought to BC stage payment made by March 10th.

C) 3. Verification of balance villages and freezing Ll lists (for other than Phase-I viflages) by February.

4. Completion of demonstration of houses by March 15 th .

C) Sd/-17.02.202S

VP GAUTHAM

MANAGING DIRECTOR

TGHCL, HYDERABAD C) Tot

The Project Director (Housing) in the State. C) Copy to the District CoMectors in the State.

Copy to all MPDO/MCs (through District Collectors) Copy to the Additional Collectors/AC(LB)

All senior officers in Head Office.

Encls:

(1) Anamilis lists
(2) Supuraheu lists
(3) PPT on old Indiramna
(4) Online approval list.

soft copies only.

// ATTESTED ///

CHIEF ENGINEER

e

MPDO COLLECTOR APPROVED LIST

	Distric t	No of Mandals	S bm itted GPs	MPDO submitted	Collector Approved
	Adi}abad	17	16	1745	414
2	Korimnagar	15	58	6065	2005
3	Khammam	20	19	1385	754
4	Mahabubnagar	20	176	648	
5	Medak	31	176	1671	403
6	Nalgonda	27	176	2570	20
7	Nizamabad			6641	2374
8	Rangareddy	21	21	1805	790
9	Warangal			1108	445
10	Nirmat	18	27	2259	942
I I	Jagitial		40	7994	1323
12	Peddapallj	13	21	2675	1792
C) 13	Rajanna Sircllla	12		522	308
14	Mancherial	16	24	3625	
	Kamareddy	22	26	2511	1279
16	Hanumakonda	12	9	1747	434
01 17	Jayashankar Bhupalapally		18	2164	1 545
	Mahabubabad	12	13	2159	
19	Jangoan	22	29	1800	664
C) 20	Bhadradri Kothagudem	25	28	3428	1994
e) '21	Sangareddy	23	29	3218	553
22	Siddipet	14	15	3583	2440
C) 23	Wanaparthy	20	20	2920	\ 1066
24	Nagarkurnool	12		2205	i 257
25	Jogulamba Gadwal	23	24	3001	1419
26	Suryapet		31	5755	3103
C) 27	Yadadri Bhuvanagiri	18	16	1948	678
2B	. Vikarabad	15	14	1602	356
29	Kumuram Bheem Asifabad	5	5		1495
C) 30	Medchal Malkajigiri	9		421	27
31	Mu)ugu		13		396
32	| Narayanpet			1284	859
	Totals	540	671		

83458 29184

C)

Copyright @Att rights reserved to TGHCL. Content owned, maintained and updated by TGHCL. Version 1.0

C)

w)

Minutes of the Video conference with Project Director's held by the Managing Director on dt.25.2E2025

1. 2BHK basic amenities sanctioned vide GO 892:

- MD has reviewed the status of progress of Basic amenities sanctioned in 2BHK colonies under Phase-II and directed to all Project Directors to ensure that the tenders shall be floated and to ground the works immediately.

- All the all PDS are directed to submit the cancellation proposal where the basic amenities are not required and also for new sanctions which are not covered earlier through District Collectors immediately.

- Further, all PDS are directed to concentrate on electrical works and obtain the electrical estimates from the DISCOM immediately as the estimate rates of electricity works will be revised by the DISCOM w.e.f 01.04, 2025,

(Action: Project Directors)

2. Phase I villages grounding

- District wise status on conducting meetings by the Collector with all MCs/MPDOs has been reviewed by the Managing Director. Though instructions were issued two weeks back to brief the Collectors to conduct pre-grounding meetings with MCs/MPDOs, but till now the meetings are not yet completed in some of the Districts.
- Accordingly instructions issued to conduct awareness camps in the selected villages and see that the houses are grounded. Grounding position is Zero in the following districts i.e. / Jogulamba Gadwall Kamareddy, Medchal, Mulugu, Nagarkurnool, Nirmal, Nizamabad, vikarabad and Warangal districts, The PDS are instructed to ground the houses sanctioned in PhaseI immediately.
- As per the online report/ the houses are grounded in the following Districts are single digit i.e., below 10 numbers only in Medak, Naigonda, Hanumakonda, Bhupalpalli, Mahabubnagar, Narayanpet, Wanaparthy, Karimnagar, Asifabad, rangareddy, sangareddy, yadadri, Adilabad and

Rajanna siricilta districts which is not yet an satisfactory levels. All the PDS were promised that they wil! speed up the grounding of houses.

- Overall, MD has expressed his djs-satisfaction on the grounding of houses in selected villages and instructed the Chief Engineer, TGHCL to monitor the status everyday.
- The PD(H) Medak stated that error is showing to capture the mark out photo at Sivampet village,
- MD clarified all the PDS that "Geo fencing will not allow to capture the photo from a site other than the one captured during Indiramma survey. The App camera will open in the same place only. That is not an ERROR and that is the intended functionality of the App".

(Action: Project Directors)

3, Re-verification of all balance villages:

- The status on verification of L 1 t L2, L3 lists in balance villages is reviewed, Only 7 districts submitted the status. He other districts informed that the re-verification is started,PDs were instructed to submit
  the status in spreadsheets along with number of applications verified. C)
- Hence PDS were instructed to submit the status in spreadsheets along with number of applications verified.
- MD once again retreated that/ re-verification of balance villages shall be attended by MC/MPDOs and other officers as instructed by Collector and grounding of selected villages by the Housing officials,

(Action: Project Directors) C)

3. Demonstration houses(DH):

- Out of 500 DH sanctioned only 324 DH houses were grounded and 46 DH are mark outs given, The Project Directors have been directed to expedite the grounding of all DH and complete by 15 th March 2025
  positively.
- Adopt different technoiogies whiie construction of DH in foundation; walling and Roofing in each Assembly Constituency so as to aware the beneficiaries/peop!e/public representatives in cost effective and innovative technologies.
- If site is not available in the premises of MPDO's, identify site in other area at situated at road side where public floating is high side location.

(Action: Project Directors)

4. Mason Training:

1st batch masonry training was imparted from Dt. 17 th February 2025 to 22.02, 2025 for 6 days training at NAC centre Hyderabad. The 2 nd phase

(7) training shall be imparted to the masons from Y^d March 2025 to 8 th March

2025 for 6 däys at respective NAC centres in the Districts.

(Action: Project Directors)

General Instructions

Based on the inputs and feedback reports, circular instructions and minutes, from time to time are communicating to all the Collectors and PDs, It is the responsibility of the PDS to bring the circular instructions to the notice of the Collectors and MCs/MPDOS.

- This Office is keep on sending anamaly/ exceptional reports like anomalies, highest rejections on 5% super check of MCs/MPDOs, sanction of more no

C) of houses from same address etc. All such reports are to be verified by the PDS

and submit to the District Collectors and Head Office with signatures,

(Action: PDS in the District and Vigilance Officer at Head Office)

- Total 23,014 grievances are received in INDIRAMMA INDLU login. Out of which only 679 are resolved by the MCs/MPDOs.The Project Directors are C) instructed to co-ordinate with MCs/MPDOs on daily basis to redress the grievances with proper reply to the applicant. Redressal of most of these

C) available in MPDOs logins. Field verifjcationt wherever required, can be combjned with the

ongoing suo-moto revivification process.

Sd/- 09.0312025

Managing Director

The Project Director (Housing) in the State.

Copy to the District Collectors in the State

C) Copy to all MPDO/MCs (through District Collectors)

Copy to the Additional Collectors/AC(LB)

Copy to all sections in the head office,.

/attested/

C)

Chief Engineer

File No.TGHCL-ENGG/MEET/1/2025-ENGlNEERlNG SECTION

GANAHOUSING CORPORATION LIMITED : : HYDERABAD

H.N0. 3-6-184, STREET#17, HIMAYATHNAGAR, HYDERABAD-500029

Memo.no 1116/TGHCL/E&P/ INDIRAMMA INDLU/ 2024 03/03/2025

Sub: Implementation of INDIRAMMA INDLU- monitoring- PDS conference on Dt.07.03,2025 -Date of intimation- Reg.

C) The Conference with the Project Directors, (Housing) of TGHCL for the month of March 2025 is scheduled on Dt.07.03.2025 at 11.00 AM in the Conference hall of TGHCL, Head Office, Himayathnagar, C) Hyderabad.

The Agenda for the meeting:

C) l . Grounding of Phase I sanctions.

2, Verification of balance villages,

3. verification reports on

a) 6 Anomalies,

b) Top 100 colonies rejection in 5% super check of MCs/MPDOs. C) (Signed copies of PDS to submit by 5 3.2025)

C) 4, Status-on Demonstration of houses.

5 . Progress on infrastructure works sanctioned under G,O, 892.

C) 6. Status on e-KYC

7. Grievances redressal,

C)

8. Training of masons

o The Project Directors are requested to attend the meeting along with orelevant information.

M.CHAITANYA KUMAR, CHIEF ENGINEER(MCK)-

C) TGI-ICL, CHIEF ENGINEERJO/O•TGHCC

C)

Alf the project Directors (H), TGHCL.

Copy submitted to the Commissioner GHMC for information.

C) Copy to ail the District Collectors for information,

C)

Copy to all the Sr, Officers in Head Office for information and necessary action.

led by M Chailanya

e: 03-030025 19:06:53tson•. Approved

TELANGANA HOUSING CORPORATION Ltd.

H.no.3-8-184, Street No. 17 Urdugally Himayatnagar, Hyd-29

From:

Sri.VrP.Gautham, IAS

Managing Director

The District Collector

_____ District

Lr No.1116 E p	N IRAMMA	NDL 2 23 '002b

Sir,

Sub: TGHCU-INDIRAMMA INDLU- Vigilance- verification of applications through Mobile App- 5% super check by the

C) MCs/MPDOs- Highest rejection during 5% super checkre-verification and action to be Initiated against C) the concerned- instructions issued - Reg .

Ref 1.G.O,Ms No. 7,Transport, Roads & Buildings (RH & C.AI) Dept. / dt.09,03.2024.

C) 2. Govt Memo no 6375/RH&C.A1/2024 dt 12-12-2024

3. This Office circuiar No.1116/TGHCC/E&P/1NDIRAMMANDLU/ 2024, Dt.09, 12.2024.

C)

Kind attention is invited to the subject and references cited,

Vide reference 2 nd cited detailed guidelines were issued for conduct of Survey of applications received during Prajepalana by the Surveyors,

C) Necessary precautions required to be taken while conducting survey were also given from time to time to ensure that reliable data is entered by O surveyors.

.Vide reference 3 rd cited, circular instructions were issued/ MPDOs/MCs were directed to do a simultaneous super-check at least 5% of the processed applications and 5% of the inelligible applications selected randomly by the system. The same report is also enabled in District C) Collectors login (In reports MPDO Super check Report) to checkup the rejected applications on 5% super check by the MCs/MPDOs/ along with rejected reasons. C)

The objective of this random super-check in all GPs/Municipal C) wards is to ensure genuineness and eligibility. The intent behind making it simultaneous is to ensure that it does not become an exercise in post-

C)

e)

C)

○

ɔrtem and to give the supervisory officers real-time feedback on quality,

ɹs giving opportunity for course-correction, C)

. In 5% super checl< made by the MCs/MPDOs both in Urban and ɪral areas, the highest rejected 100 villages are analyzed and details are closed in the Annexure pertains to the district,

As seen from the list, rejection percentage is on very high side and it Shows that the surveyors have not contented verification properly and have dulged in gaming the system to make in eligible beneficiaries enter into the gibility pool, . C)

Therefore, it is requested to

1 . To look into the matter personally and initiate action against the surveyors, who are found to be wilfully indulging in irregular practices.
2. To re-verlfy the survey data in GPs/wards where rejection percentage is high during super- check.

ɪclosed: GP wise details(Annexure).

Sd/-08.03,2025 C)

Managing Director

Copy submitted to Secretary to Govt., Housing (T, 0B) department.

Copy to all the Project Directors(H) in the state.

Copy to State Vigilance Officer, TGHCL to follow up.

//Attested//

Chief Engineer

TELANGANA HOUSING CORPORATION LIMITED, HYDERABAD

H.No.3-6-184. Street No. 17, Urdugaliy, Himayathnagar, Hyderabad-29,

C)

CIRCULAR

Circular No. 1 1 16/TGHCL/E&P/1NDIRAMMA INDCW/2024, Dtd.09.03,2025

Sub: INDIRAMMA INDLU- Grounding of houses- Usage of twin pit toilets jn Indiramma Indtu and Model Houses-instructions issued-Reg.

Ref: 1. GO MS no 7 of ΓR&B(RH& ca. I) dept dt 09-03-2024

It is to inform that, the INDIRAMMA INDLU Housing scheme is aimed to provide affordable housing to economically disadvantaged families, C)

It is necessary that house under Indiramma Indlu shall necessarily have latrine C) (ISL),which can be dovetailed under SBM(G). It is suggested to go for latrine with 2 leach pits instead of Septic tank or one deep pit, The two pit latrine C) works on leaching action of soil where the liquid effluent is leached In to soil,

Septic tanks cost much as well require closed sewers to dispose liquid effluent. o Since the houses are now sanctioned in BLC mode on the own house sites of the beneficiaries, It is suggested to go for 2 leach pit latrine. Two pits are C) proposed, one for active use and the other as a standby when first plt is filled,

A detailed Technical note of CBRI for construction of toilet with two leach pits O is enclosed herewith for reference and adoption,

Sd/-09.03.2025 .o Encl: As above MANAGING DIRECTOR C)

O To Project Directors (H)/DNOs in the State.

Copy to all MPDOs, through District Collectors.

//Attested//

C) Chief Engineer

C)

CENTRAL BUILDINC RESEARCH INSTITUTE, INDIA

LOW COST SANITAT(ON FOR RURAL URBAN HOUSES

u otii•o n

Poor health devo 10 pi no coun t (I e 8 is duo to digeasas I iko choler 0 1)ipa :dy.€entty . q.oslroentoritis and vvotm in.loctlong •ecrtie.d by conteru'no(ad (ood, water ond around, ovi Effect}.Ve senltatlon Is on Important vvoy Of the Incidence of such dlseoseg bu.t modern water.borne sanltation systern 1 8 world not oossible in meny parts of the due to i (S 111 0 h cost oncJ $ hot toge of Yi'ä(or. High cost of provlding gewofß (0! turol as well 89 urban having low densi.ty, rnukcs t hern non-acceptable due to tin-oncial constrolntg. Thocoforø, It is Irnportont to search for opproptlgte elternativog,

A' Of to-day (1 985) in Indio, about 48%' pcopje have no lotrlncs, while 29% havo b.ueka't or dry lut(jnos ond only 23% hgve flush tattincs. Condition iri rut a! oceøs 15 still worse in comparison to the go n tan overng•es oncJ majority people rosocl to open o.i{ deloc•o n reveal (hat 1 20 million•pooplo In the world ere wlthout adequate wa,ter supply end 1 350 mJllion w/thout ggnttary.. World aver ago for poopiø h BVIng access to sani(gry (acillties in curol areas Is 1 5 per cent.

doge-hole lattjnes with Pieces I slabs had be^{e}é•n tried in India but theso suffered nom the nul.sop•ca of odour end Oybreeding. T be pits a:190 jot flNad up soon (hecegsl tating o db^{l}ätl.qe sitio. The design WES improved wit b the äddiLion of a concrete pan and water geol

tho complox design '01 Vocuutn (3 Sys tern, Thelf applicability and occeptance d•epond on tho pr.eferönou based •on ovaiia- bllity of spaoe, boa) bo^{s}fl oondltlons end fJngtice. Each of .thgm potentlällty of its adoption undor dlffotent Circumstances, C)

However, 8 deslgn for widet opplicaticn Bhould be gimpio, inexpongivo in eori$truc- lion Und Bhould provido (cood•onn (porn odet.J(end unsightly condlt.ions, hondling 01 frosh excralu and Its contact with flies and I t should alimlnn(e chance€ of of surface BOO, gutface and giound water thet may. enter .thö gptings or wells.

in edd]t'on to basic tho following requfrements have to t ^{r}. c.onsldorqd while proposing any a.xcreta disposb.\ systsn-t (0! dovqloping coun trios.

Daily operation Bhould requiro filinirn 1.; eduootion and guidance to users o} ail egdR.

2. Cost of. tho .syetem should bo within the reach Of ugel'.g
3. Consuuctlon of tho sys tern moil') I y based on I he use of local rnatoriafs and i IS muintenonco should be possibh: with senii-skilfed labour avoilabic in (he area.
4 Requirement of wat-et for transpor! • and treet•mont should be minimum.

C)

trap 10 cut out odout and (lies.

A numbot of efforts hove been rnado In this direction since 1'930, os a result of which, •mere l.h.on doz•on de:sions of diffMont types

'Of sanitary hdV0 boon developod varying

front tha gimplast dos!on o' bore—hole type to

5. The syst•om snouio Inc;udo tho of Improvecmant in (UI Ure when condition of the peop'e improves.

CBRt'g Contribution

Cenuot aui\ding Reseorch instituto (CBRI).

Q)

Rootkô0 has studied the difforbn•t• types Of dosięns ovoilabłe for 1 ho construot(on of Iow cost rural and urban la(rines to sugggst econornicafly viabfo and accept.-8'ble •solutions Żor developing countri6S, Different BSPBCtS liko siza of (he super-6łructurgt type Of letrlne pans and weter gaat, differan(spocłficgtlons' for consttuction of ieachłng pils includ•lag (hoi' distance from one gnothet 8nd .com existinq buifdings hov.e bean ex 8mInod. Followino rocommenda t;ons are made on the basis Oi (hase studies

Type o/ Lott/no

Hond-flus•hed water seai lettine płoposod by 'Plonnlno Regegrch. Actton draw)ngs d f ter consid•orl ng ' 'the si•ze. •tlWŻ brick gvôifoble.

3, o/ Construction

Nine dlffotent specifications for the cons.ž tructlon of latrine, slxleen lor lin.ino the leBchŔ• ino plłs ond four pil covers wełe linnllsod con•sidoring t h e małb^{t}ri bn'd skil^{l} lsdifferent part s of t•h9 country, Tho mg.tołfalţ-:, used include bl icks, concto le, ferro-comenl.: used bitumen dłum, ma:t.6 and eotth•en.) rings. Typłcal d061.qns using brlck$.: dU'o to thelr ăvellabl•łlty In ' m'osf of the: areas, wlth btioď spoditica.tions ere shown Fig, I and Flg 2. H o-wa.v.0(, .dŕ.awlngs• propoglno use o f can be ovoilBblo on spocif'ic

(ng ti Cu te (p RAI) ' Lucknow • and N B{iorrul EnvironmentBl Enginee ring R•e5earch I ngliAUt•e (NE E'R I) , ond 8dop.te.d by I ndlan Slendatds Institution (OS I) r Ngw 07Ôţ•hI Is fecommendod for odoption• due to iłs łów C) wotor łoquirement;• ftoedom from odour. and OnSlÔhtly cohdilions, oase In constr.učľio.n and and Iow • cott of construction. Tho d08ign cons16 ts of cement • conci.gto/moso(c

O pon, known In the merket as PRAI Typo (now In sanl(8tyw.e re o s weU os C) F. R P • shopocf t•/U P hbvłno 20 mm wb,t.-er.

s.oól, (ool ros 1 5, ond two pip.08 made •o f cd•rh8člt C) conc.(ô.łô Or gny ołher suitebie fi18tar181 •(Ćbvered chBn.ficl madoą o d brlck can algo be u sed) add C) conneo{ed with iwo 10Bching• The pipec

or blick chonnolB or e connacted wi(h tbrough o conneclino chamber whlch potrnits In 5hittino the coqnoctlon to the socon•d looch$no pil when Tho gets filiBd up

C) 1 ho PO'iod of 6 yonrs. Tho lir 9 1 DII con be emptiod fot succ.oss•lve une afto' ful(hor Inpse of 3 1 0 6 yoacs ond I ho contgnqs usod os monure. C)

2 S/zĐ o/ LĐtrine

Sizo of 75 cm x 90 cm (Fig. 1) .ix the minlmcnn but i i nood8 suic(

C) supervlsion e nd control dîłnensions w.h ll•e (i xiii9 (Iłe p an cl (oot I os (s ta moi n

C) prop•or (',loaruncou, und (all poopla (oel bit conoogłgd. Th o Bizo 80.cłn

C) 1 00 cm moro opproptiglo ond opţlmum (o suti$(y fill (ho porgons,

C) 80 cm 1 03 cłh slzo is odoptQd (n (he onclosod

d. Copa c iły o/ Soi/

It hos be e.n• th.8t Ilucopćciły l ,e•, % (^{c}a ro of doętoose.s after• firgt use. d:U0 deposftlon of org gnid in porticles. T his can . bo iłnpr.o•yed t ho opon Sky tor ońćj ł emovino tha decomposod e xcr e•tb dutłno woe1hBf.

S tudlos hovo olso bo en cocriod out oni watB(p.orcolo(lon In 1 0 adhlh•g ^{t} ôÎts:' with honbť comb bilok wgll, with soľld bŕlck: wiîhô(fl ple sfor Of polntlng, wl(h irnp orvious f$00'f wlthoul (100 t. Ef foct o f wił h withouą ' honoy co cnt•) b} ir:k ^{t}woc,k. . is ficonł bu ł Ihnt of (loorg• is h'ţll:.

Ih otolołe ' uconnrnondod ł h a I the wŁjł) 3 Igachino should be solid withoul pbs(ori n.Q ot point Ino t.•o moko t hum 6łructur•Blly îttong ond (ô eyoi•d , cuvîng soil. .^{r} The [loor 8ho•vłg • bo with 0,1, , linioo. oxceët in high witop Tibie whoi!-, i'.(h8B 10 bo impervio•us.

5, D/$lpnce Dolwoor) P •;ł-s

A mininnutn Ol one rocołnrnoľlded b0(wočfĂ pîvs nvold o f wole" f'iôni' o Ibor. How o Vot Uf o

101 purposo is linîblôd$ end Ibe Iwo loacliinę) pilb' - l
i'0.Vo• -10 bo 1.
10001 het ił prot-)0 R0d (o divłdu (hen•ł

153

ng

n

.

s

C

l

a

0)

C

•ie

/

lod

C

déd,

ve,

k

n

on:d

nd

C)

There f$ a shon notes scpnn:ar/sing available //lfor• on selzctcd •of bulldlng rrscorc/l for (Ire •use, of englnccrti bul•ld.ljv Yi'at•chlal m others lh?cretted th bulldlifg tisgarch, To lhce(l/f/c hied way so far brlng.lng ow(. j:grtous setla(publicatl•0H$, Ing Dl.ges(/, Nolo, Dato Sheet." Info?ht Notes, Tee/tnl&al & (l yea.r decldcd In Jangary

C)

(ho' 34ih In th*lj

C)

of adopt•/ng (he given lily publ/codon.

2. The construction of 1 1 .5 cm (45) thick for legchlng pifB is preferred over cm (3') wall due to gase in.layfng and better st8bifity ogainst concentrated toads,

3. Solid R.C.C. pit cover, 7.5 cm thick with sufficient reinforcement 8te preferred (o

ovoid ony occldon(due- (o unexpectådly hlgh loads or poin(lotd caused by cattle.

4, the latrines ore working sat18fgctorily ond the demond has lhcrosged manyf61d

Conclus!om

S8tigfactory performance of lhe low-cog, sonit8ty iatrinos built 8t various pfaces by CBRi has pavod tho way towards a solu(ion of tho problem. The low Inl(l.oi exponditurо and maintenance cost makes t.hem more dccoplobfe even to the weaker godllon• of soclBt.y,

UDC : 628.42
SfB : Ab6

Printed at :
Jain Printing Press, Roorkee
Copies – 2000

Prepared by : Narendra Verma
Published by : S. Srinivasan
Central Building Research Institute
Roorkee, (U.P.), INDIA
Revised : March, 1985

the low-cost
us places by
ts a solution of
xpenditure and
nore acceptable
ciety.

erma
an
Institute.

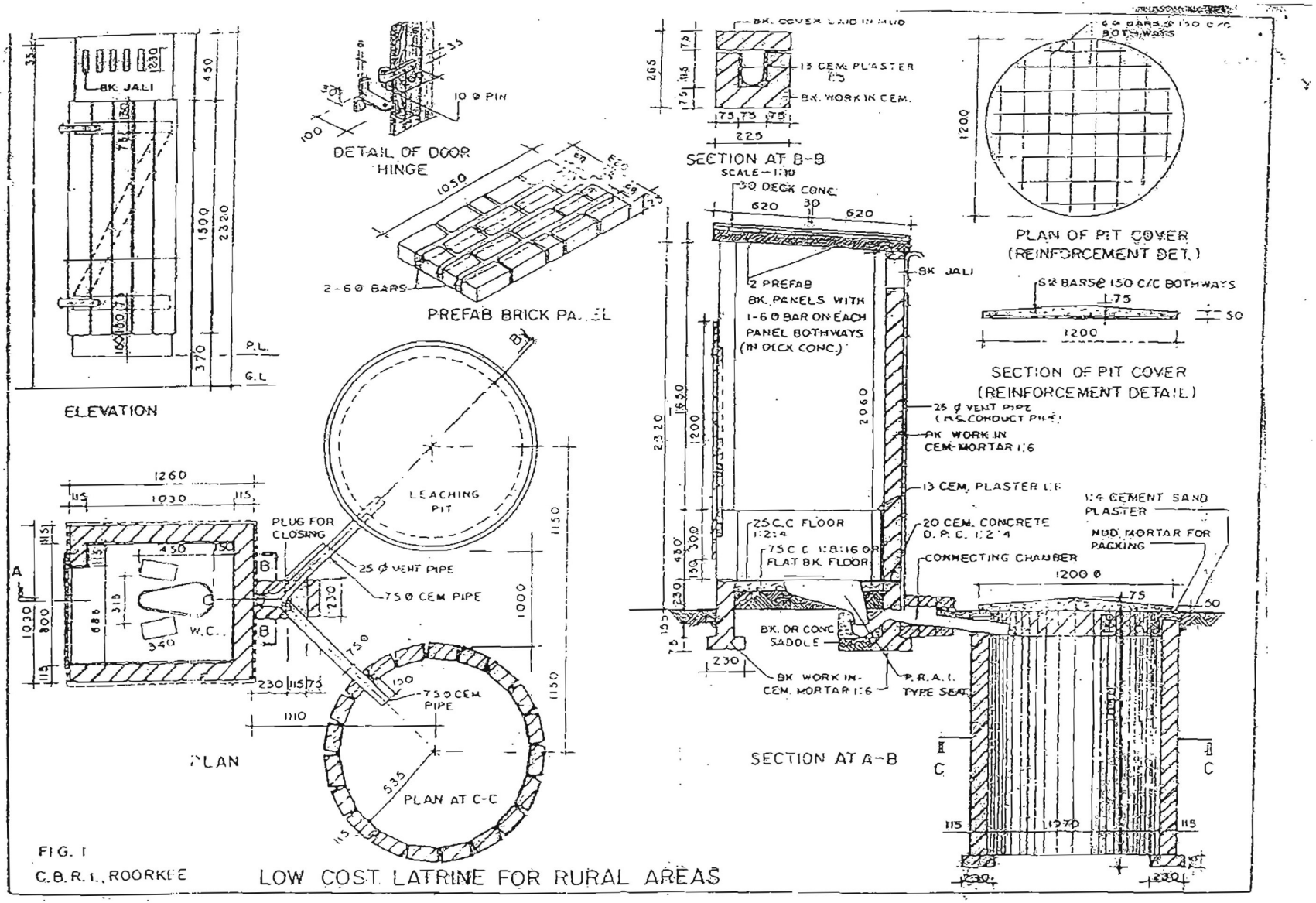

FIG. 1
C.B.R.I., ROORKEE

LOW COST LATRINE FOR RURAL AREAS

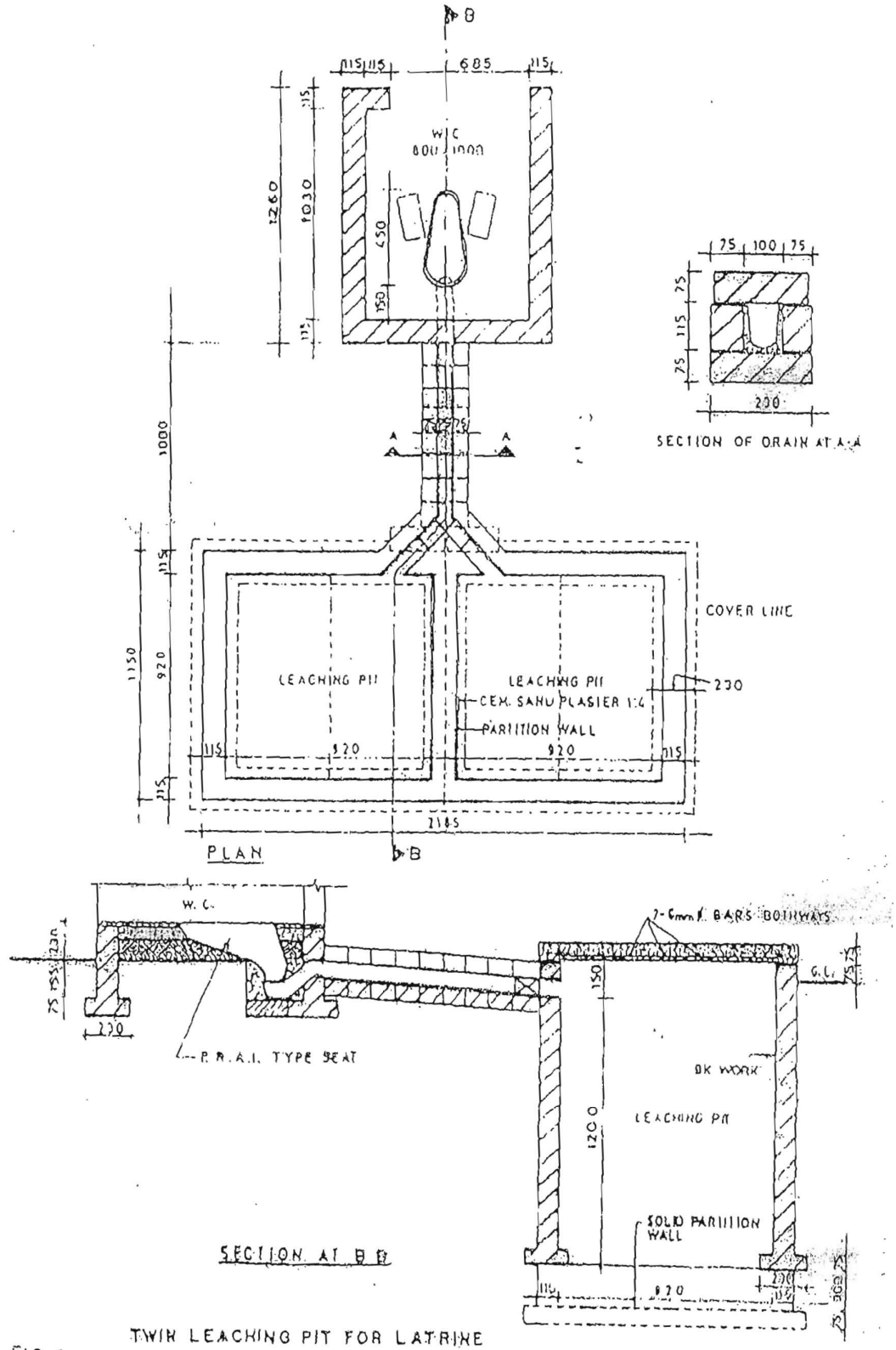

TWIN LEACHING PIT FOR LATRINE

FIG. 2

157

TELANGANA HOUSING CORPORATION LIMITED, HYDERABAD

H.No.3-6-184, Street No. 17, UrdugallY, Himayathnagar, Hyderabad-29.

CIRCULAR

Circular No. 1116/TGHCL/E&P/1NDIRAMMA INDLU/2024, Dt:09/03/2025

Sub: INDIRAMMA INDLU- Sanction of houses in Phase-I -Grounding of houses - Do's and Don'ts - Guidelines- Regd

Ref: 1. GO MS no 7 of ΓR&B(RH& ca.l) dept dt 09-03-2024

2. Govt Memo no 6375/RH&C.A1/2024 dt 12-12-2024

3. This Office circular u. 1116/TGHCL/E&P/1NDIRAMMA INDLU/2024,Dt.23.12.24, dt 18.01.2025 and Dt.25.01,2025.

4. Project Directors conference held on 04.02.2025 and Zoom meeting

held Addi Collectorss, PD(H), and held on with 05.02.2025, MCs MPDOs

Vide ref 2nd cited, detailed guidelines were issued to conduct Survey of applications received during Prajapalana by the Surveyors.

Further / the District Collectors are accorded sanctions in the selected villages i.e one village per mandal. The grounding of these sanctioned houses are in progress.

Hence, the following clarifications on Do r s and Don'ts are mentioned below:

Dors

1. House shall be constructed afresh from ground zero with fresh markout on the survey conducted site.
2. After markout and before construction of basement, the geo-coordinates of the markout/ basement/ the geo-tagged photo of the site of construction shall be captured on the mobile app.
3. Houses shall be constructed with minimum plinth area of 400sft with two rooms, kitchen and toilet.
4. After reaching of every stage, the photo of the individuai housé shall be captured and uploaded on the mobile app, based on which payments will be released,

Don'ts

1. Extension to an existing house, sharing the wall with an existing house, construction of house in first floor over the existing house are NOT allowed.

2. Repairs to the existing house/roof replacement of an existing house are NOT allowed,

3. Houses already in Construction before capture of markout photo (Columns raised, walling stage, roof cast etc) shall NOT be eligible for payments,

4. Construction of joint house (2-3 beneficiaries pooling money to construct a single big house) is NOT allowed. To avoid such instances, not more than one sanction may be accorded to a single household/joint family. Therefore, the District Collectors are requested to issue instructions to the field functionaries to learn *lessons from irregularities pointed out by Audit/Vigilance in the earlier housing schemes and go ahead with grounding of the houses under new Indiramma Scheme from ground zero level as per the instructions being issued from time to time from this Office and make the Scheme as successfui one under 6 guarantee programme -Abhayahastham,

Sd/- 09403.2025
Managing Director

All the District Collectors in the State

The Commissioner GHMC

Copy to all the Project Directors (H)/ DNOs in the State.

/Attested/

Chief Eng neer

O

O

Minutes of the Video conference with Project Director's held by the Managing Director on dt.25.2.2025

1. 2BHK basic amenities sanctioned vide GO 892:

- MD has reviewed the status of progress of Basic amenities sanctioned in 2BHK colonies under Phase-Il and directed to alt Project Directors to ensure that the tenders shall be floated and to ground the works immediately.

- All the all PDS are directed to submit the cancellation proposal where the basic amenities are not required and also for new sanctions which are not covered earlier through District Collectors immediately.

C)

- Further, all PDS are directed to concentrate on electrical works and obtain the electrical estimates from the DISCOM immediately as the estimate

C) rates of electricity works will be revised by the DISCOM w.e.f 01.042025.

C) (Action: Project Directors)

2. Phase I villages grounding

C) District wise status on conducting meetings by the Collector with all

C) MCs/MPDOs has been reviewed by the Managing Director. Though

instructions were issued two weeks back to brief the Collectors to conduct

O pre-grounding meetings with MCs/MPDOs, but till now the meetings are not o yet completed in some of the Districts.

- Accordingly instructions issued to conduct awareness camps in the selected villages and see that the houses are grounded. Grounding position is Zero

C) in the following districts i.e., Jogulamba Gadwall Kamareddy, Medchal/

Mulugu, Nagarkurnool, Nirmai, Nizamabad, vikarabad and Warangal C) districts. The PDS are instructed to ground the houses sanctioned in PhaseC) I immediately.

C) As per the online report, the houses are grounded in the following Districts

are single digit i.e., below 10 numbers only in Medak, Nalgonda, e)

Hanumakonda, Bhupalpalli/ Mahabubnagar, Narayanpet/ Wanaparthy,

Karimnagar, Asifabad, rangareddy, sangareddy, yadadri, Adi[abad and

C)

Rajanna siricilla districts which is not yet ail satisfactory levels, Al' the PDS were promised that they will spee.d up the grounding of houses.

Overall, MD has expressed his dis-satisfaction on the grounding of houses in selected villages and instructed the Chief Engineer, TGHCL to monitor the

C)

status everyday. C)

The PD(H) Medak stated that error is showing to capture the mark out photo at Sivampet village.

MD clarified ail the PDS that "Geo fencing will not allow to capture the photo from a site other than the one captured during Indiramma survey. The App camera will open in the same place only. That is not an ERROR and that is the intended functionality of the App".

(Action.' Project Directors)

3. Re-verification of all balance villages:

- The status on verification of LIR L2, L3 lists in balance villages is reviewed. Only 7 districts submitted the status. He other districts informed that the re-verification is started,PDs werc instructed to submit the status in spreadsheets along with number of applications verified. C) C)

Hence PDS were instructed to submit the status in spreadsheets along with number of applications verified.

- MD once again retreated that, re-verification of balance villages shall be attended by MC/MPDOs and other officers as instructed by Collector and grounding of selected villages by the Housing officials.

(Action: Project Directors)

3. (D C)

Demonstration houses(DH):

- Out of 500 DH sanctioned only 324 DH houses were grounded and 46 DH are mark outs given, The Project Directors have been directed to expedite the grounding of ati DH and complete by 15 th March 2025 positively.
- Adopt different technologies while construction of DH in foundation wailing and Roofing in each Assembly Constituency so as to aware the beneficiaries/people/public representatives in cost effective and innovative technologies.
- If site is not available in the premises of MPDO's, identify site in other area at situated at road side where public floating is high side location.

(Action: Project Directors)

4. Mason Training:

1st batch masonry training was imparted from Dt. 17 th February 2025 to 22.0212025 for 6 days training at NAC centre Hyderabad. The 2 nd phase training shall be imparted

to the masons from 3 rd March 2025 to 8 th March 2025 for 6 days at respective NAC centres in the Districts.

(Action: Project Directors)

General Instructions

- Based on the inputs and feedback reports, circular instructions and minutes, from time to time are communicating to ali the Collectors and PDs. It is the responsibility of the PDS to bring the circular instructions to the notice of the Collectors and MCs/MPDOS.
- This Office is keep on sending anamaly/ exceptional reports like anomalies, highest rejections on 5% super check of MCs/MPDOs/ sanction of more no

C) of houses from same address etc. All such reports are to be verified by the PDS and submit to the District Collectors and Head Office with signatures.

(Action: PDS in the District and Vigilance Officer at Head Office)

- Total 23,014 grievances are received in INDIRAMMA INDLU login, Out of

C) which only 679 are resolved by the MCs/MPDOs.The Project Directors are instructed to co-ordinate with MCs/MPDOs. on daily basis to redress the grievances with proper reply to the applicant. Redressal of most of these available in MPDOs logins. Field verification, wherever required, can be combined with the ongoing suo-moto revivification process. C)

Sd/- 09.03.2025

Managing Director

The Project Director (Housing) in the State.
Copy to the District Collectors in the State

C) Copy to all MPDO/MCs (through District Collectors) C) Copy to the Additionat Collectors/AC(LB) Copy to al} sections in the head office.

/attested/

Chief Engineer

GOVERNMENT OF TELANGANA ABSTRACT

T,R&BDepartment (Rural Housing) 2BHK Scheme - Completion • of independent and G+ pattern houses thr.ough BLC mo'de withdijt price escalation - Orders - issued.

TRANSPORTt ROADS AND BUILDINGS (RH&CrA1.) DEPARTMENT

G.O.Ms.No.33 Dt:22r03i2025

Read the fOtrowinQ^v:

1.G.O.Ms.No.TO/ Housing (RH&C.AI) Dept, dc. 15.10.2015.

2.G0 Ms.No.12, Housing (RH&C.AI) Dept, dated:26.11f2015

3.Govt. Memo Nov7888/RH&CA1/2024) T,R&B(RH&C.A1) Dept, dt:28.11.2024.

4.From the M.Dr, TGHCLt Hyderabad/ Lr.No.7706/E&P/2BHK/20.14t dt:04.01.2025).

ORDER:

C) In the reference 3 rd read above, Government hag issu.ed instructions to all the District Collectors and Commissioner, GHMCf. Hyderabad .to finalize o the beneficiaries duly following the extant •procedure as mentioned jn the G.Os 1 st and 2 nd rea.d above. They were further instructed to take steps for C) completion of (55,324) grounded .houses Which are at various stages within the sanctioned unit cost, by monl'törlng •them and expedjtfng their completion.

2.In the reference 4 th read above, the Managing Director, Telangana C) Housing Corporation Limited/ Hyderabad has. furnished the proposalS and requested for order on completion Of (55/234) grounded 2BHK houses (both independent and G+ patter.n houses) and taking the scheme to loglcal conclusion and the remaining unit cost excluding the value of work already O done will be directly transferred to the beneficiary account.

3.Government, after careful examination of the matter, hereby agree on the fol)owing:

1. The District collector/Commissio.ner GHMC to complete allotment of all grounded 2BHK houseS/ •of the stage of constructibn to the poorest of the poor wh.o are not having hQUsing• sites and found eligible from the. applic.ants of Prajapalana being Verified through Mobile App.

2, The agreements w(th the exlstlng contractors may be foreclosed and the houses shall be handed to the beneficiaries in u as is where condition'/ to complete the balance part Of the houses in their own by the beneficiaries, through Beneficiary Led ConstructLn (BCC) Mode,

3. In case of G+ houses, tower wlse committees be formed önd• ask the committees to complete .the houses wlth• the balance brnoünt available in the unit cost/ in the same BLC mode,

C)

The, Managing Director, Telan•gana Housing Corporation Linnitedt Hyderabad shalf •take further necessary actjÖn accord)ngiy,.

(BY ORDER AND IN THE NAME OF GOVERNOR OF TELANGANA)

DrJYOT1 BUDDHA PRAKASH
SECRETARY TO GOVERNMENT

The Director,
Telafiga•na h.lo•ugfng Corporation I-Imited,
Hyderabad...
CQ2Y .to.
The Comtnlssioner; GHMC,
H.yderabad».
All the •D.i•etr.ict Collectors..
The, OSD to Chief Secretary.
The PS to H:on tbTe 'M(Housing),
The PS to Prf•. Secretary .(CR) to CM

C)

C)

4 . If any of the. contractor ts willing to complete the höuses at the existing agreement rates (without price escalation) and makes •an application to the Collector to that effect] the shall be permitted to complete giving Extension of time(EDt) with defined time schedule, Even In such cases benéfictaries shall be tagged to their respective allotted houset •so as to ensure quality and accounta billty.

/ [FORWARDED ORDER/ I

C)

SECTION OFFICER

C)

No. N-1 1 0 1 /3/2025-HFA-III-UD (9 1 89284)
Government of India
Ministry of Housing & IJrban Affairs (HFA Directorate)

Nirman Bhawan, New Delhi,
Dated 27th March, 2025

OFFICE MEMORANDUM

Subject: Minutes of fhe I sf meeting of the Central Sanctioning and Monitoring Committee (CSMC) for Pradhan Manfri Awas Yojana (Urban) 2.0 and 7 I s' meeting of the CSMC for PMAY-U -H.ousing for All.

The undersigned is directed to. forward herewith a copy of the minutes of the I st meeting of the Cenfral Sanctioning and Monitoring Committee (CSMC) for Pradhan Mantri Awas Yojana (Urban) 2.0 and 7 1 st meeting of the CSMC for PMAY-U - Housing for All Mission held on 20.3.2025 at New Delhi with Secretary, Ministry of Housing & Urban Affairs in chair, for information and necessary action.

Encl: As above

(Sujeet Kumar)
Under Secretary to the Govt. of India Tele: 0) 1-23062029

Members of 'the CSMC as follows:

1. Secretary, Ministry of Housing & Urban Affairs, Nirman Bhavan, New Delhi
2. Secretary, Department of Expenditure, Ministry of Finance, North Block, New Delhi.
3. Secretary, Ministry of Social Justice and Empowerment Shastri Bhavan, New Delhi. 4. Secretary, Department of Health and Family Welfare, Nirman Bhawan, New Delhi.
5. Secretary, Department of Financial Services, Ministry of Finance.
6. S.ecretary, Ministry of Labour & Employment, Shram Shakti Bhawan, New Delhi
7. Secretary, Ministry ofMinority Affairs, Paryavaran Bhawan, New Delhi
8. Addi. Secretary (Housing), M/o HUA, Nirman Bhawan, New Delhi
9. Joint Secretary and Financial Adviser, Ministry of HUA, Nirman Bhavan, New Delhi. . Joint Secretary (NULM), MoHUA. Nirman Bhawan, New Delhi

Mission Director (Smart Cities), MoHUA.

'1 2. Joint Secretary & Mission Director —in charge of HFA, MoHUA.

Copy to:

1. The Principal Secretary, Municipal Administration & UD, Govt of Andhra Pradeshi Room 105, L-Block AP Secretariat, Hyderabad, 500022

The Commissioner cum Secretary (UD & Housing), Govt of Arunachaf Pradesh, Civil Secre.tqriat(Itanagar-791 1 1) , Arunachal Pradesh.

iif,. The Pt.incjpql Secretary, Urban Development and Housing Department, State Government of Bihqr,Vikash Bhavan, Mailey Road, New Sectt: Patna- i 5 iv- The Principal Secretary Urban Local Bodies Department, New CiVil Secretariat, C) Government of Haryana, Sector 1 7, Chandigarh 16001 7.

v. The Principal Secretary (Housing &UD), U.T. Govt of Jammu & Kashmir, Room No. 3/23, Ctvjl Secretariat, Jammu- 1.8001 .

vi. The Director(Housing) Ex-officio Director (Housing) cum Joint Secretary to Govt. Housing and Urban Development Depart.ment Government of' Odisha, State Secretariat Annex -Be Bhubaneswar-751ö01 ...

vii. The Principal Secretdry, öeptt Of Urban Dével'opmenfr, UT Govt. of Puducherry, Secretariat, Puducherry 605001.

viiL The Additional Chief Secretary & Mission Director (HFA), Govt of Rajasthan,

Department of Urban Devebpment, Housing and Local Self Government, Room No. 2207, ltnd Floor, Main Building, Siate Secretariat, Jaipur-302005.

ix. The Principal Secretary to Government, Municipdl Adminisfiation & Uibdn Development Department, Government of Telangana, D-Bjacki 1 st Floor, Secretariat, Hyderabad- 500022.

x. The Secretary, Urban Development, Government of Uttar Pradesh, Navchetna Kendra, 10, Ashoka Marg, Lucknow- 226001

xi. The Secretary to Government, H &UD Department, Govt. of Tamil Nadu, Secretariat, Chennai-600009.

Copy also to:

i. CCA, M/o (HUA) ii. Dy. Director General, HFA Directorate, M/o HUA, New Delhi,

iii. General Manager (Projects), HUDCO, India Habitat Centre, Lodhi Road, New

Delhi 1 10003 C)

.

IV. Executive Director, BMTPC, Core 5A, India Habitat Cenfre, Lodhi Road, New Delhi 1 10003.

V. Dy Secretary-(HFA-I)/ Dy Secretary-(HFA-il), HFA Directorate, M./o HUA, New Delhi.

vi. Director (IFD), Mio HUA vii. Joint Director, NBC Nirman Bhawan New Delhi. .

viii. Dy. Chief MIS, HFA Mission Directorate, New Delhi — with a request to upload if on M/o HUA website immediately.

ix. PMIJ, HFA Mission Directorate, New Delhi

x. Under Secretary-HFA- / HFA-2/HFA4/HFA-5 xi. Section Officer-HFA- I /HFA-2/HFA-3/HFA-4/HFA-5 xji. Asst. Accounts Officer (JnNURM/RAY/HFA).

((Sujeet Kumar)
Under Secretary to the Govt. of India
Tele: O) 1-23062029

C)

s. No.	Contents	Page Number
1	Confirmation of the minutes of the 70 th meeting of CSMC under PMAY-IJ held on 29.10.2024 (A enda 1	6
2	Consideration for Central Assistance for 126 BLC projects submitted by State of Andhra Pradesh (Agenda 2)	6
3	Consideration of the proposal for Central Assistance for 46 BLC projects submitted by State Govt. of Arunachal Pradesh (Agenda 3	8
4	Consider.'ati•on for Central Assistance for 255 BLC projects submitted by State of Bihar (Agenda 4)	9
5	Consideration for Central Assistance for 14 BLC projects submitted b State of Ha ana A enda 5	10
6	Consideration of the proposal for Central Assistance for 3 AHP ro•ects su'bmitted b UT of Jammu & Kashmir A enda 6	12
7	Consideration for Central Assistance for 76 BLC projects submitted b State of Odisha A enda 7	13
8	Consideration for Central Assistance for 3 BLC projects submitted by UT of Puducherry (Agenda 8)	15
9	Consideration for Central Assistance for 197 BLC projects submitted b State of Ra•asthan A enda 9	16
10	Consideration for Central Assistance for 120 BLC projects submitted b State of Telan ana A enda 10	17
11	Consideration of Central Assistance for 448 BLC projects under PMAY-U 2.0 submitted by State of Uttar Pradesh (Agenda 11)	19
12	Proposal to allow- State Government of Uttar Pradesh to engage more than 12 Domain. Experts/ Professionals in SLTC and more than 5 Domain. Experts/Professionals in CLT,Cs• depending upon their actual r.equirement for assisting the implementing agencies in effective Planning, implementation and monitoring of PMAY-U 2.0 scherne A enda 14	20
13	Operationalisation of Data Resources cum Monitoring Centre (DRMC) set up by MoHUA through BMTPC for PMAY-U 2.0 (Agenda 12)	25
14	M€thOd010Ü and Cost Norms for DPR Desk Scrutiny, DPR Site Scrutiny (along with Desk Scrutiny) and Random Quality Check of the Pro•ects under PMAY-U 2.0 A enda 13	30
	Proposals of 71 st csrvlc meeting of PMAY-U	
	Proposals submitted by 24 States/UTs for surrender/ curtailment of 6,55$Ö19 houses (BLC- 4,86,693, AHP-	36

	1,57,461, ISSN| 0>865) approved by CSMC in its various meetings under PMAYU Aªenda 17	

C)

C)

C)

C)

16	Amendment in the ARHCs project at Sriperumbudur, Tamil Nadu, as approved in 55 th CSMC meeting held on 16.08.2021 A cenda 15	38
17	Proposal for ratification of Category and Gender •count in PMAY(U) MIS as requested by States of Andhra Pradesth, Maharashtra, Tamil Nadu, Uttar Pradesh, Gujarat, Mizoram and Ra•asthan - re . A aenda 16	•41
18	GENERAL OBSERVATIONS	42

Minutes of the 1 st meeting of the Central Sanctioning and Monitoring Committee (CSMC) under Pradhan Mantri Awas Yojana (Urban) 2.0 and 71 st meeting of the Pradhan Mantri Awas Yojana (Urban) Housing for All held on 20 th March 2025.

The I si meeting of the Central Sanctioning and Monitoring Committee (CSMC) under Pradhan Mantri Awas Yojana Urban (PMAY-U) 2.0 and 71 st meeting of the Pradhan Mantri Awas Yojana (Urban) was held on 20 th March 2025 at 3.00 p.m. in the Conference Room, Nirman Bhawan, New Delhi under the Chairmanship of Secretary, Ministry of Housing and Urban Affairs (MoHUA), The meeting was attended by the participants/ representatives from various State/ UT Governments, . Officers concerned of the Ministry and other Departments etc. The list of participants is at Annexüre'-l,

2. The meeting began with a welcome address by the Joint Secretary & Mission Director (HFA), MoHUA. States/ UTs (as in Annexure-I) of Andhra Pradesh, Arunachal Pradesh, Bihar, Haryana, Jammu & Kashmir, Odisha, Puducherry, Rajasthan, Telangana, Uttar Pradesh attended the meeting C) (online/ offline mode) who had sub.mitted new proposals under PMAY-U 2.0 and proposals for revision/curtailment of their houses/ projects under PMAYo U.

3. The Joint Secretary and Mission Director (HFA) informed that the Union Cabmet, chaired by the Hon'ble Prime Minister, approved PMAY-U 2.0 on 9

C) August 2024. With an estirnated investment of ? 10 lakh crore, the scheme 'intends to provide Government Assistance to 1 crore eligible families/ beneficiaries of urban areas through States/ UTs/PLIs to construct or purchase or rent a house at an affordable cost. The scheme is being implemented for a period of 5 year.s for sanction and completion of the höuseS;/ptOjects. Families belonging to EWS/ LIG/MIG segments, living in urban areas) having no pucca house anywhere in the country are eligible to C) get benefit under PMAY 2.0. All statutory towns as per Census 2011 and towns notified subsequently, including Notified Planning Areas, Areas falling O within Notified Planning/ Development area under the jurisdiction of Industrial Development Authority/ Special Area Development C) Author.ity./Urban Development Authority or any such Authority under State legislation which is •entrusted with the functions of urban planning and o regulations are also included for the coverage under PMAY-U 2.0. Special focus under the scheme is given to Safai Karrni, Street Vendors identified under Pradhan Mantri Street Vendor's AtmaNirbhar Nidhi (PMSVANidhi) 'Scherne arid different Artisans under Pradhan Mantri-Vishwakarma Scheme, Angafiwadi Workers. Building and other Construction Workers (BoCW), O Reside-hie slunas/chawls and othe'r groups identified during operation of the scheme. Further, preference under the scheme is given to widows, Persons

O with Disabilities, Transgenders, persons belonging to Scheduled

. Wiifiüies of:the CSMC:of PMAY-Lf •æ•ßMCJ20.3.2025

C

C)

2.0 &

C)

Castes/ Sc'heduled Tribes and, Minorities. The Scheme. will ensu;ré equity across different segments of population by addressing the requirement -of slum dwellers, SC/STs, minorities, widows, Persons with Disabilities and other underprivileged sections of the society.

.He further informed Chat under Pradhan Mantri Awas Yojana — Urban 2.0 (PMAY-U 2.0) financial assistance to eligible families is provided through following four verticals:

- Beneficiary Led Construction (BLC)

  This component of the scheme provides assistance to individual eligible families belonging to EWS categories to construct new houses on their own available vacant land, The beneficiaries under this vertical are allowed to construct an all-weather pucca house of 30-45 sqm.. carpet area. In the case of landless beneficiaries, States/ UTs at their own .expense may provision heritable, preferably non-transferable land rights (pattas) with lock-in period of minimum 5 years,_ to the fåmilyo making them eligible beneficiaries under the BLC vertical, .

- Affordable Housing in Partnership (AHP)

  The Mission provides financial assistance to EWS beneficiaries for owning houses bein cr built with different n artnerships States/UTs/ Cities/ Public/ Private agencies. All projects of AH P vertical promotes use of resource efficient, climate responsive, disaster resilient, ecofriendly and sustainable building materials, technologies and processes. Central Assistance will be given to public sector implementing agencies and to Beneficiaries through Housing Vouchers
  in case of private sector projects. Redeemable. Housing. Vouchers is provisioned to beneficiaries who purchase house from private projects. States/UTs/ULB shall whitelist the private sector projedts•. complying with all the necessary norms. An additional Grant in the form Qf Techn010U Innovation Grant (TIG) 31000 per sqm./unit -is provided to AHP Projects using innovative construction technologies notified by MoHUA. All houses under AHP vertical shall have a mandatory lock-ih . period of minimum 5 years from the date of allotment.

C)

C)

. Interest Subsidy Scheme (ISS)

This component provides benefits of subsidy on home loans for .EWS/LIG and MIG families. Beneficiaries of EWS/LIG and MIG taking . loan up to 05 lakh with house value up to 05 lakh are eligible,,for 4% interest subsidy on first lakh loan up to 12 years tenure. A ma-Rimutn .of 0.80 lakh subsidy (maximum NPV 0.50 lakh) is provisioned for eligible beneficiaries in 5 yearly instalments provided loan is. s.tandard

O

as well as live at the time of release of subsidy and more than 50% principal is outstanding.

. Affordable Rental Housing (ARH)

ARH vertical aims to create rental housing for beneficiaries of EWS/LIG category including industrial workers/ working women/ urban migrants/ homeless/destitute/single women/ construction workers/ students/ long-term tourists [contractual employees/ professionals, among others. This vertical shall ensure affordable and hygienic living spaces for urban dwellers who do not want to own a house but require housing for short term basis or those who do not have the financial capability to construct/ buy a house. ARH is implemented through two modek • model-1:: ütifiziog existing Government funded vacant houses in cities by converting them into ARH under Public Private Partnership mode or by public agencies.

. Model-2: Construct, Operate and Maintain rental housing by

C) Private/ Public Entities for urban poor; working women; employees of industries, industrial estates, Institutions and other eligible EWS/LIG families.

An additional Technology Innovation Grant (TIG) for the project using innovative & alternate technolog[r] for speedier, sustainable, resource efficient

o and disaster resilient construction has been provisioned under ARH. TIG @ ₹3,000 per sqmt. on bu_ilt up area up to 60 sqmt. (including internal infrastructure) by Central Government is provisioned. State/ UT Government shall release (2000/ sqmt. as part of their State Share of TIG for construction of houses using innovative construction technologies.

4. In Was urther informed that in order to seek benefit under PMAY-U 2.0, States/UTs will have to formulate "Affordable Housing Policy" containing various reforms and incentives for ensuring active participation of o Public/ Private entities and promote Affordable Housing Ecosystem. {Affordable Housing Policy' will include such reforms, which will improve the affordability of 'Affordable Housing'.

5, In addition, a •Technology & Innovation Sub-Mission (TISM) has been set up under PMAY-U 2.0 to guide and facilitate States/ UTS and other C) stakeholders in adoption of modern, innovative and green technologies and building material for faster and quality construction of houses. Under TISM, o States/ UTs/Cities. will be assisted through innovative practices and projects .in. ehällénge• mode focused on disaster resistant and environment• friendly tedhnglogies fQT climap smart buildings and resilient housing.

C)

C)

6. The CSMC was informed that under PMAY-U 2.0, a robust.and Unified Web Portal (https://pmaymis*pv.iL/_EMBYMI-S2_2Q_?4JPmayQefault.æm:) has been developed at Central Level to monitor and evaluate the Scheme. This web-portal is accessible to all stakeholders and have the facility for the beneficiaries to apply and track their application status on real-time basis. States/ UTs, implementing agencies, beneficiaries and all concerned stakeholders have accessibility to upload all requisite information on the portal. This will enable real-time reporting and monitoring of the progress and performance of the Scheme. A mobile-friendly interface has also been developed with offline functionality and multi-lingual support with enhanced accessibility and inclusivity. The MIS of web-portal provides real-time access to key performance indicators, dashboards and analytics to enable informed decision-making by program managers and policymäkers. By •focusing on. these key aspects of quality, the MIS system will significantly enhance the

(3

management and effectiveness of the Scheme leading to better outcomes and improved service delivery for citizens.

Under PMAY-U 2.0, all activities related to MIS is being done through the Unified Web Portal such as applications by beneficiaries, verification of beneficiaries, Geo-tagging of beneficiaries, attachment of beneficiaries, preparation of Detailed Project Reports (DPRs), generating beneficiaries list, generation of releases of various instalments of Central Assistance, its utilisation amongst others- CSMSC was informed that the Unified Web Portal (U WP) is designed comprehensively for the scheme which is working smoo{hly. CSMC directed the States/UTs to use the UWP of PMAY-U 0.0 for all related activities of the scheme as per the prescribed guidelines issued by' the Ministry, rather than creating/ developing their own MIS system.

7.It was informed that under PMAY-Ü 2.0, MOA with 30 State/ UT Governments have been ed, and matter is being followed up with the remaining States/ UT Governments. es/UTs have been directed to complete the demand survey for selection of beneficiaries r PMAY-U 2.0 along with verification of the same to assess the actual demand under different icals; conduct Information Education & CQmrnunjcation (IBC) activities to make people e of the scheme.

8. It was clarified that as per PMAY-U 2.0 scheme guideline, State / UT Governments are mandated to enter, verify, geotag, attach the beneficiaries and further create projects/DPRs through the Unified Web Portal. It was further informed that State / UT Governments of Bihar, Andhra Pradesh and Puducherry has adopted the- Unifie.d Web portal for demand entry, online verification, beneficiary attachment, generation of •beneficiary list and DPRs etc.

Minutes.of 71"

However, States/UTs like Rajasthan, Arunachal Pradesh, Haryana, Uttar Pradesh, Telangana and Odisha have either not completed/ partially completed the verification/ attachment process and are directed to complete the due process through (JWP within 10-15 days from the approval of CSMC so that they become eligible to get the first instalment of Central Assistance. Failure to do so will result in the revocation of the approved houses/ projects under PMAY-U 2.0.

9.. Subsequently, Joint Secretary & Mission Director (HFA), made a detailed presentation Cövering present •status of PMAY-U. It was informed that as On date, a total of 118.64 lakh houses have been sanctioned involving Central Assistance of about 0.0 lakh crore- Against the sanctioned houses, O more than 1 12.74 lakh houses have been grounded for construction, of which about 92 lakh houses are completed/ delivered to eligible O beneficiaries-s Central Assistance of 0.68 lakh crore has been released to States./UT.s/CNAs, There are proposals .for curtailment/ surrender of 6, 55,019 höU$es in three verticals and balance sanctioned houses are at different stages öf construction/ yet to start. There are still large number of undero constructed houses in Andhra Pradesh, Maharashtra, West Bengal and Karnataka. It was informed that barring Andhra Pradesh, most of the funds C) released from Govt of India has been transferred by State/ UTs to SNA account. It was reiterated that no Central Assistance will be available after Q extended PMAY-Ü Mission period (31.12.2025) and any spill over liabilitiesfor completion of houses will have to be borne by the respective State/..UT

O Governments-

the 2.0 &

C)

CSMC appreciated the high completion rates in UP, MP, Tamil Nadu, Gujarat, Arunachal Pradesh? Himachal Pradesh etc. under BLC vertical. States where completion rates are above 90% were requested to push one time and complete all houses of PMAY-Urban in next 3-4 months. Special mention of o appreciation was given to Director, SUDA (Uttar Pradesh) for huge progress made in last 2 years improving completion rates. Lagging states need to learn C) and emulate best• practices adopted by UP and other advanced States in completion of sanctioned BLC houses. C)

The occUpancy of completed AHP houses is vety low particularly in the o States of Andhra Pradesh, Chhattisgarh, Gujarat, Karnataka, Telangana, Tamil Nadu, Maharashtra, Uttar Pradesh and Madhya Pradesh. States/ UTs C) need to expedite th.e completion of houses, infrastructure work and allotment of completed AHP house$ the beneficiaries. It was informed that the o States/U.Ts: have been advised that the projects under PMAY-U 2.0 should have basic civic infrastructure/ amenities like water, sanitation, sewerage, o road, electricity etc. Urban Local Bodies (ULBs) should ensure that individual housgs under ISS and B•LC verticals shall have ithe p'rovision for these basic C) -civic amenities. States/ UTs shall endeavour to make suitable provisions for all required/ nece-ssary infrastructure and civic amenities in the Detailed o Project Reports (DPRs)• •to make it habitable.

Minutes of CSMCOf.PMAY-U 71'" CSMC/20.3.2025

C)

e)

C)

It was highlighted that w.e.f. 1 st April 2025, all the funds under PMAY—U 2.0. will be released tluo.ugh Mother Sanction under SNA-SPARSH module of PFMS only and no fund will be transferred through Treasury Accounts. State Governments of Rajasthan and Assam have taken a lead in this direction and many other States/UTs Governments are already on board for funding of Central Assistance under PMAY — U Mission through SNASPARSH module.

The CSMC was informed that the funding for Capacity Building (0B) activities and Administrative & Other Expenses (A&öD) ineludirig SLTC/CLTC, IDC, Social Audit, TPQMA etc. up to 31.03.2025 will be under PMAY-Urban as per existing funding pattern and from FY 2025-26, funds will be releas.ed for such activities as per PMAY-U 2..0 guidelines. CSMC djre'öted . the States/UTs to send their Annual Capaci'ty Building pröposals for hiring/ onboarding the Agencies/ Experts under Capacity Building Activities before 31 st March 2025, as per the -operational guidelines of PMAY-U 2.0.

10. Thereafter, Joint Secretary & Mission Director (HPA) introduced the agenda for both 1 st csMC of PMAY-U 2.0 and 71 st CSMC of PMAY-U.

1.	Confirmation of the minutes of the 70th meeting of CSMC under PM.AY-U held on 29.10.2024 (Agenda 1)

The 'agenda items also form part of the minutes. The minutes recorded in alphabetical order are as follows.

the 2.0 &

C)

Minutes of the 70th meeting of CSMC under PMAY=Ü held On 29.10.2024 was confirmed.

2	Consideration for Central Assistance projects for 126 BLC submitted by State of Andhra Pradesh (Agenda 2)

A. Basic Information:

The proposal under consideration of CSMC was for Central Assistance 126 BLC projects submitted by State of Andhra Pradesh. The salient details. of the proposal are as under:

Com onent	BLC
of Pro •ects	1%
No. of Cities	126
Total Pro•ect cost	0,06, 173.50 lakh
Central Assistance	u7,578.50 lakh
State Share	81,719 lakh
ULB IA	Nil
Beneficiary Contribution	Total - lakh (a, e 4.00 lajch er house)

B. CSMC observations:

1.	he CSMC appreciated the efforts of the State Government of Rajasthan for SNA-SPARSH on boarding under PFMS.
ii.	Beneficiaries' details needs to be uploaded in UWP, PMAY —MIS
	he duration ofBLC project is 12-18 months.
	Subsequently, second and third instalment will be released as per the compliances received from the Stale Govt. of Rajasthan as per scheme guidelines.
v.	State Govt. of Rajasthan shall adhere to all the compliances mentioned in scheme guidelines.
vi.	State Govt. of Rajasthan will provide all basic civic amenities in the areas where BLC houses being constructed before completion of houses.
vil.	State to complete 13,369 AHP houses and improve Occupancy by providing civic infrastructure and ensuring allotment.
111	UC pending - UI .62 crore, unspent balance 008.76 crore. State Government may submit pending UCS and utilize unspent balance immediately.

c C. CSMC Decision:

After detailed deliberations CSMC approved Central Assistance for the proposed houses/ projects and recommended for release of first instalment of the Central Assistance for the State of Rajasthan as under:

C)

C)

Component	BLC
No. of Projects	197
No. of Cities	197
Central Assistance	05>823.00 lakh
Amount of 1 st Instalment of Central Assistance	(14,329.20 lakh
Total No. of Houses	23,882
No. of DWS houses	23,882
Condition(s), if any, for release of 1 st instalment	Aadhaar seeded beneficiary entries in UWP, PMAY(U)-MIS.

10	Consideration for Central Assistance for 120 BLC projects submitted by State of Telangana (Agenda 10)

ct-wise.detail$sare given at Annexure IX,

C)

C)

Minutes ofthe CSMC of PMAbU12.O &7iW CSMC/20.a.202S

C)

C)

A. Basic Information:

The proposal under consideration by CSMC for Central Assistance of 120 BLC projects under P.MAY-U 2.0 sübmitted by State Government of Telangana. The details are under:

Com onent	BLC
No. of Pro•ects	120
No. of Cities	120
Total Pro•ect cost	₹5,68,405.00 lakh
Central Assistance	₹1,70,521.50 lakh
State Share	₹3,97,883.50 lakh
ULB IA	Nil
Beneficia Contribution	Total - Nil
Amount of 1 *Instalment	Z68,208.60 lakh
Total No. of DUS ro osed	1,13,681
No. of EWS houses	1,13,681
Approval by SLSMC& SLAC	SLAC Minutes Submitted SLSMC Minutes Submitted

1 .	Beneficiaries) details needs to be uploaded in UW P, PMAY(U) — MIS after due verification by the State/ULBs.
1) .	he duration of BLC project is 12-18 months.
111.	Subsequently, second and third instalment will be released as per the compliances received from the State Govt. as per scheme guidelines.
iv.	State Govt. shall adhere to• allthe compliances mentioned in scheÜÄe guidelines.
v.	State Govt. will provide all basic civic amenities in the areas where BLC houses being constructed before cornpleLi01L or houses,
vie	Occupancy of completed houses is the major issue. State to allot the 58,000 vacant completed houses to the beneficiaries at the earliest.
vii.	Out of 1 AHP houses completed, beneficiaries attached for 82,641 (56.57%) houses only.
iii.	? 167.37 crore as Unspent Balance, UC worth 63.06 crore are Pending. State Government to utilize unspent balance and submit pending UCS immediately.

C)

C. CSMC observations:

C. CSMC Decision: After detailed deliberations, CSMC approved Central Assistance for the proposed houses/ projects and recommended for release of first instalment of . the Central Assistance for the State of Telangana as under: .

Minutes of 1" 2.0 & 71"

Com onent	BLC
No. of Pro-ects	120
No. of Cities	120
Central Assistance	₹1,70,521.50 lakh
Amount of I st Instalment	68>208.60 lakh
Total No, of DUS rö osed	1, 13,681
No. of. EWS houses	1,13 681
Condition(s), if any, for release of Istinstalment	adhaar seeded beneficiary entries in wp, PMAY (U)-MIS.

Project-wise details are given at Annexure X.

C)

11	Consideration of Central Assistance for 448 BLC projects under PMAY-U 2.0 submitted by State of Uttar Pradesh A enda 11

A. Basic Infot.ma,tion:

The proposal under consideration by CSMC is for Central Assistance of 448 BLC projects under PMAY-U 2.0 submitted by State Govt. of Uttar Pradesh. The details are as under:

Com onent	BCC
No. of Pro-ects	448
No. of Cities	448
Total Pro•ect Cost	₹3,63,317.50 lakh
Central Assistance	03,842.50 lakh
State Share	₹61,376.80 lakh
IJLB IA	Nil
Beneficia Contribution	18,098.20 lakh
Amount of I sc Instalment re uested	03,537.OO lakh
Total No. of DUS ro osed	55>895
No. ofEWS houses	55,895
A rov.al b scsMC & SLAC	SLSMC meetin minutes awaited

O C

C)

B. CSMC observations:

1.	Beneficiaries' details needs to be uploaded in UWP, PMAY(U)—MIS
	duration of BLC project is 12-18 months.
	Subsequently, second and third instalment will be released as per the compliances received.•from the State Govt. as per scheme guidelines.
iv.	State Govt. shall adhere to all the compliances mentioned in scheme guidelines.

C)

C)

Miqu.tes-of-the I'V CSMCof PMAY-U 2.02 71m CSMC/na.202S

Annexure X

Salient Details of 120 BLC projects submitted by State of Telangana

S. No	City_ Name	District_ Name	Category wise				Gender			Fund details (₹ in lakh)					
			General	SC	ST	OBC	Male	Female	Transgender	Total	Project cost (Rs. in lakhs)	Central Assistance @ ₹ 1.50 Lakh per house	State Grant @ ₹ 3.50 lakhs	Beneficiary share	1st Instalment of 40 % of Central Assistance
1	Bhupalpalle, Municipality	Acharya Jayashankar - Bhoopalpally	6	138	21	219	59	325	-	384	1,920.00	576.00	1,344.00	-	230.40
2	Adilabad, Municipality	Adilabad	98	703	284	2,721	245	3,560	1	3,806	19,030.00	5,709.00	13,321.00	-	2,283.60
3	Dharmapuri, Municipality	Adilabad	12	24	-	189	14	211	-	225	1,125.00	337.50	787.50	-	135.00
4	Kothagudem, Municipality	Bhadradri-Kothagudem	41	274	95	697	78	1,028	1	1,107	5,535.00	1,660.50	3,874.50	-	664.20
5	Manuguru, Municipality	Bhadradri-Kothagudem	51	231	231	791	107	1,197	-	1,304	6,520.00	1,956.00	4,564.00	-	782.40
6	Palwancha, Municipality	Bhadradri-Kothagudem	39	171	328	385	50	372	1	923	4,615.00	1,384.50	3,230.50	-	553.80
7	Yellandu, Municipality	Bhadradri-Kothagudem	46	277	135	961	102	1,316	1	1,419	7,095.00	2,128.50	4,966.50	-	851.40
8	Parkal, Municipality	HANUMAKONDA	30	531	21	886	140	1,328	-	1,468	7,340.00	2,202.00	5,138.00	-	880.80

十、

| | | |

23	Yellareddy, Municipality	Kamareddy	6	49	21	278	23	331	-	354	1,770.00	531.00	1,239.00	-	212.40
24	Choppandandi, Municipality	Karimnagar	27	136	8	469	47	593	-	640	3,200.00	960.00	2,240.00	-	384.00
25	Huzurabad, Municipality	Karimnagar	88	471	7	828	219	1,174	1	1,394	6,970.00	2,091.00	4,879.00	-	836.40
26	Jammikunta, Municipality	Karimnagar	80	511	25	998	219	1,395	-	1,614	8,070.00	2,421.00	5,649.00	-	968.40
27	Karimnagar, Municipal Corporation	Karimnagar	90	413	43	985	126	1,405	-	1,531	7,655.00	2,296.50	5,358.50	-	918.60
28	Khammam, Municipal Corporation	Khammam	192	811	215	2,265	315	3,163	5	3,483	17,415.00	5,224.50	12,190.50	-	2,089.80
29	Khanapuram, Municipality	Khammam	7	186	24	545	48	714	-	762	3,810.00	1,143.00	2,667.00	-	457.20
30	Madhira, Municipality	Khammam	51	217	22	396	81	605	-	686	3,430.00	1,029.00	2,401.00	-	411.60
31	Sathupally, Municipality	Khammam	42	146	51	253	39	452	1	492	2,460.00	738.00	1,722.00	-	295.20
32	Wyra, Municipality	Khammam	136	446	65	770	164	1,252	1	1,417	7,085.00	2,125.50	4,959.50	-	850.20
33	Kagaz Nagar, Municipality	Komaram Bheem Asifabad	57	554	10	1,724	170	2,174	1	2,345	11,725.00	3,517.50	8,207.50	-	1,407.00
34	Dornakal, Municipality	Mahabubabad	4	113	78	197	42	350	-	392	1,960.00	588.00	1,372.00	-	235.20
35	Mahabubabad, Municipality	Mahabubabad	83	436	632	1,264	400	2,014	1	2,415	12,075.00	3,622.50	8,452.50	-	1,449.00

| | | |

| | | |

| | | |

79	Bhainsa, Municipality	Nirmal	23	122	14	1,598	53	1,704	-	1,757	8,785.00	2,635.50	6,149.50	-	1,054.20
80	Nirmal, Municipality	Nirmal	42	219	57	1,882	135	2,064	1	2,200	11,000.00	3,300.00	7,700.00	-	1,320.00
81	Armoor, Municipality	Nizamabad	11	118	13	568	84	626	-	710	3,550.00	1,065.00	2,485.00	-	426.00
82	Bheemgal, Municipality	Nizamabad	5	52	-	167	18	206	-	224	1,120.00	336.00	784.00	-	134.40
83	Bodhan, Municipality	Nizamabad	52	131	10	1,520	92	1,621	-	1,713	8,565.00	2,569.50	5,995.50	-	1,027.80
84	Nizamabad, Municipal Corporation	Nizamabad	78	270	59	1,980	141	2,245	1	2,387	11,935.00	3,580.50	8,354.50	-	1,432.20
85	Manthani, Municipality	Peddapalli	43	45	2	339	34	395	-	429	2,145.00	643.50	1,501.50	-	257.40
86	Peddapalli, Municipality	Peddapalli	10	61	3	313	45	342	-	387	1,935.00	580.50	1,354.50	-	232.20
87	Ramagundam, Municipal Corporation	Peddapalli	37	311	69	755	93	1,079	-	1,172	5,860.00	1,758.00	4,102.00	-	703.20
88	Sulthanabad, Municipality	Peddapalli	20	213	12	821	127	939	-	1,066	5,330.00	1,599.00	3,731.00	-	639.60
89	Sircilla, Municipality	Rajanna Sircilla	16	154	34	754	110	848	-	958	4,790.00	1,437.00	3,353.00	-	574.80
90	Vemulawada, Municipality	Rajanna Sircilla	53	445	28	897	152	1,271	-	1,423	7,115.00	2,134.50	4,980.50	-	853.80
91	Adibatla, Municipality	RANGA REDDY	32	123	55	365	51	524	-	575	2,875.00	862.50	2,012.50	-	345.00

92	Amangal, Municipality	RANGA REDDY	17	93	58	232	47	358	-	405	2,025.00	607.50	1,417.50	-	243.00
93	Amberpet, Municipality	RANGA REDDY	90	254	44	430	46	772	-	818	4,090.00	1,227.00	2,863.00	-	490.80
94	Badangpet, Municipal Corporation	RANGA REDDY	25	161	26	258	56	414	-	470	2,350.00	705.00	1,645.00	-	282.00
95	Bandlaguda Jagir, Municipal Corporation	RANGA REDDY	6	30	1	101	7	131	-	138	690.00	207.00	483.00	-	82.80
96	Ibrahimpatnam, Municipality	RANGA REDDY	48	138	15	354	53	502	-	555	2,775.00	832.50	1,942.50	-	333.00
97	Jalapally, Municipality	RANGA REDDY	14	59	9	1,549	49	1,582	-	1,631	8,155.00	2,446.50	5,708.50	-	978.60
98	Kothur, Municipality	RANGA REDDY	11	61	5	84	17	144	-	161	805.00	241.50	563.50	-	96.60
99	Meerpet, Municipal Corporation	RANGA REDDY	11	51	13	89	16	148	-	164	820.00	246.00	574.00	-	98.40
100	Narsingi, Municipality	RANGA REDDY	2	113	6	140	22	239	-	261	1,305.00	391.50	913.50	-	156.60
101	Shadnagar, Municipality	RANGA REDDY	42	87	45	608	83	699	-	782	3,910.00	1,173.00	2,737.00	-	469.20
102	Shamshabad, Municipality	RANGA REDDY	14	58	3	169	20	224	-	244	1,220.00	366.00	854.00	-	146.40
103	Shankarpally, Municipality	RANGA REDDY	21	89	2	181	26	267	-	293	1,465.00	439.50	1,025.50	-	175.80
104	Thukkuguda, Municipality	RANGA REDDY	16	106	28	337	40	447	-	487	2,435.00	730.50	1,704.50	-	292.20
105	Turkayamjal, Municipality	RANGA REDDY	77	184	141	354	71	685	-	756	3,780.00	1,134.00	2,646.00	-	453.60

106	Ameenpur, Municipality	Sangareddy	7	33	1	61	6	96	-	102	510.00	153.00	357.00	-	61.20
107	Sangareddy, Municipality	Sangareddy	1	-	-	4	1	4	-	5	25.00	7.50	17.50	-	3.00
108	Dubbak, Municipality	Siddipet	-	-	-	1	-	1	-	1	5.00	1.50	3.50	-	0.60
109	Gajwel, Municipality	Siddipet	-	-	-	1	-	1	-	1	5.00	1.50	3.50	-	0.60
110	Narsapur, Municipality	Siddipet	3	65	21	363	41	411	-	452	2,260.00	678.00	1,582.00	-	271.20
111	Kodad, Municipality	Suryapet	-	-	-	8	-	8	-	8	40.00	12.00	28.00	-	4.80
112	Suryapet, Municipality	Suryapet	-	1	-	2	2	1	-	3	15.00	4.50	10.50	-	1.80
113	Wanaparthy, Municipality	Wanaparthy	-	-	-	2	-	2	-	2	10.00	3.00	7.00	-	1.20
114	Narsampet, Municipality	WARANGAL	74	403	79	1,609	207	1,957	1	2,165	10,825.00	3,247.50	7,577.50	-	1,299.00
115	Wardhannapet, Municipality	WARANGAL	23	168	187	342	58	662	-	720	3,600.00	1,080.00	2,520.00	-	432.00
116	Alair, Municipality	Yadadri Bhuvanagiri	20	166	23	170	19	360	-	379	1,895.00	568.50	1,326.50	-	227.40
117	Bhongir, Municipality	Yadadri Bhuvanagiri	-	1	-	5	1	5	-	6	30.00	9.00	21.00	-	3.60
118	Choutuppal, Municipality	Yadadri Bhuvanagiri	-	-	-	5	-	5	-	5	25.00	7.50	17.50	-	3.00

119	Pochampally Municipality	Yadadri Bhuvanagiri	-	-	-	7	1	6	-	7	35.00	10.50	24.50	-	4.20
120	Yadagirigutta Municipality	Yadadri Bhuvanagiri	-	-	-	1	-	1	-	1	5.00	1.50	3.50	-	0.60
Total			4,436	25,166	5,598	78,481	10,198	1,03,437	46	1,13,681	5,68,405.00	1,70,521.50	3,97,883.50	-	68,208.60

o) Iq IQS

File No.TGHCL-MlS/INDl/3/2025-MlS SECTION

Telangana Housing Corporation Limited

To

V P Gautham, IAS
Managing Director

Al) The District Collectors
Telangana State

Sir/Madam,

Sub: TGHCL - MIS - Clarification on Colour Codes Displayed in Approval Services under Indiramma Indlu - Reg.

It is to inform that Phase-I sanctions under the INDIRAMMA INDLU

C) scheme have been accorded by selecting one village per Mandal as a pilot.

As you would know/ the applications submitted by GP secretaries are processed by MPDOs/MCs and transmitted to Collectors for sanction. During sanction, Collectors are expected to do due scrutiny. To assist collectors in this due scrutiny, images of dwelling units (both inside and

C) outside house photos) taken by the GP surveyor are visible in Collectors/

AC/ PDS login. This will enable the collector to assess the living conditions of the applicant.

The following exceptions are flagged for collectors to go deep into such applications, by viewing photos, family member details, etc.

1. Duplicate/invalid FSC/ aadhaar number/ mobile number.

C)

2. Age extremities (below 18 / above 60 years)
3. Al-flagged exceptions- Al not agreeing with surveyor's remarks
4. Applicants moved from L 3 to Ll list, overriding system C) recommendations.
5. More than one applicant from same house number.

Applicants falling under pny 6f the above categories are highlighted in

C) Red, serving as a cautionary flag jn the approval dashboards of MPDOs,

C) Municipal Commissioners and District Collectors login. It is requested to take extra care while sanctioning such flagged applications,

C)

and those belonging to vulnerable social groups, as per the database, are highlighted in Green for according prioritization. C)

This is for your kind information and necessary action.

Yours faithfully

VP GAUTHAM, MANAGING DIRECTOR-TGHCL, MANAGING DIRECTOR 0/0 TGHCL

Copy to

1. All the MPDOs in Telangana State for taking necessary action and information C)

File

2. Ail the Municipal Commissioners, in Te}angana State for taking necessary action and information
3. The Project Directors, Housing for information
4. All the Senior Officers, TGHCL

O

C)

Signed by vp GAUTHAM
Date: 01-04-2025 20.13.56
Reason: Approved

C)

No.TGHCL-MlS/iNDl/3/2025-MlS SECTION

Additionally, applicants identified as resid.ing in thatched roof houses

TEL-ANGANA HOUSING CORPORATION LTD.,
H.No.3-6-184/ STREET NOr;17, URDUGALLY/HIMAYATH,NAGAR,
HYD-29.

From : . To

Sri, V.P. Gautham, IAS
Managing Director

The Dlstrlct Collector,
——————— District

Lr No: 1116/E&P/INDIRAMMA INDLU/2024,Dt.04.0 4222.5

Sir,

Sub:- TSHCL - Indiramma In.dluæ Speclai Projects SanctlQneå--.
Requested to include the Beneflctarl•es under Ll Cåtégdr9 in the .Indirmma Indiu APP to accord proVislon for Sanction & •grounding the houses Reg.

Reft _ 1. G.O.Ms,No.7/ Transpor€/ Roads Buildings (RH&C.A1), Dept/

0 Dt.09.03. 2024

2. G.O,Rt.No.50, Transport/ Roads & Buiidings (RH&C.A1), Dept/ Dt: 31 101 .2024.

3. GSO. Ms,No. 40/Dt.16.11,2024, T, (RH&CAI,) Dept.,

4, C.O. Ms.No. 42/Dt..16. 1 1 12Q24/ T,

5. Govt

C) T/ R&B (RH&CAI) Dept., -000"

The Govt., has announced commencement of INDIRAMMA INDLU programme to construct house to all the houseless famllies in the State over a o period of 5 years and announced construction of 4/50/000 houses in the first year at a unit assistance of Rs 5,00/00/: per house with 100% subsidy.

Vide ref, 2 nd to 5 th cited/ the Govt. / have accorded Special sanctions under INDIRAMMA INDLU .

O

C)

C)

C)

C)

S.No.	Govt.	Govt. Dt.	Distrlct & Village	No.of Houses sanctioned	Category
		Govt Sanctioned under SR S it sanc			
	2	G.O. Ms.No. 40, DE 16.11,2024	Warangal	863	To tand losers under kakatlya Me a Textite Park
		Ms No. 42,Dt. 16. 11 .2024,	Rajanna Sirciila	4696	Project Displaced families (PDFs) under Mid Manair Reservolr
			.Total	5559	

C)

C)

C

C

Govt Considered- houses grounded under Gruhalaksmi Scheme			
Govt Lr.No.6687/RH&C.A1/2023, Dt.12.06.2024,	Warangal	408	
	Hanumakonda	45	
	Mahabubabad	43	
	Total	496	
Sanction orders distributed by Hon'ble Chief Minister during visit			
	Bhadradri Kothagudem	10	
	Total	10	
Grand Total		6065	

In this 'regardf it Is requested to •take necessary action to include the concerned Beneficiaries list under Ll category and report,

Yours faithfuiiy,

Sd/-04,04.2025

Mähägihé Director

. Copy to the Project . Director(H), concerned for informätion and necessary C)
actiofl,

//Attested//

. Supertntendlng Engineer (S)

C)

C)

Mihutes of the Video conference held on dt.02.04,2025 at 4r00PM

With all Additional Collectors (LBs), Project Directors (H), Municipal Commissioners & Mandal Parishad Development Officers

While welcoming all the Addltional Collectors (LBS), Project Directors (H), Municipal Commissioners and Mandal Parishad Development Officers (MPDOs) who •have attended the Zoom meeting, the Managing Director has reviewed the f.olTo,wmg Items,

C) 1. Phase Selected villages g'rounding:

- The gro.undlng of houses sanctioned in Phase I selected villages are reviewed and the progress Is not up to the expectations.
- All the PDS/ MCs and MPDOs are directed to focus on grounding of all houses.
- In response to the demand from the $eld for site change requests after survey before markout/ geo-fenclng is ow disabled for markout stage. Atl further stages from the basement stage will be geo-fenced based on the geo coordinates captured at the time Of MARKOUT stage.

- Motivate beneficlaries not to go for big houses (beyond 400-500sft,) which WII! be •t-h'e burden on them resulting in non-completion of houses and the clarles going into debt trap. Moreover, bigger house size indicates that the beneficiary is having enough cash •in hand to invest/ which will

C) contradlct the selection criteria of BPL/ i.e. less than 'akhs income per annum.

ost of the sanctioned and not grounded beneficiaries of Old Indiramma Scheme have again got sanctions this time. These are the most vulnerable people and they need support to start the house,

C) There; is •a pressing need to help poorest of the poor, who may be unable to start the houses due to lack of financial assistance. In such cases, MPDOs may channelize SHG loans to provide funds to start the house and hls can b:e. repaid as and when the stage-wise payments are received.

0 1 st Stage payment (Rs.l iakh) for all Basement completed houses witt -be released shortly. Hence, beneficiaries who have grounded the h.ouses may be motluated to complete the basements at the earliest so as to avail the funds,

- GP Secretaries have to capture the photos of basement and AE(Housing) WII'I •:be• the checker and he/she has to visit 100% of these Basement completed houses and verify if it ts as per norms. Additional AES (Housing) C) will be deployed in the districts in a couple of weeks.

! 95

this 3500 quota, Hence, re verification of balance completed at the earliest and a purified list be keptxeady„ . In case certain sanctioned applicants are NOT g:roundlng €he: after giving ample time, there will be pressure to cancel.

the sanction to interested beneficlarles in other villages in thetcorlf%gueney

- Sand Issue raised by the Addltional Collector, Jangaon and that the sand GO Issued In 2017 stands good and coupons öänvbQiSSered b,y the Tahsildars on the Indent placed by-the panchayath . There is an option for beneficiaries downloading the Indiramma app and logging in using and O T P. A press note in this awareness and to empower the beneficiary. Thl•s will at the level of GP Secretary.

to capture their work stage photo, by g their mobile number at the district level for l prevent undue delays

reg.ard may be issued

2. Verification of Balance Villages/ wards,

Rural areas

a. The verification not started In the Mandals fn Runa;1 out il areas is listed in Annexure—I, The MPDOs to start the immediately re-verification without further dela.y.

b, Zero percent rejection after re-verlfication in 22 mandals in Rural areas is listed out In Annexure-Il. The MPDOs to aga,ih re-verify the applications.

c. State average rejection percentage In Ll is 19.24%. In the 177 mandals rejection percentage Is below 10% is observed and listed in Annexure — I Il. The MPDOs to again re-verify the äppl:iéatibns properly.

Urban areas

d. Verification not started In the Munlclpa:lities-/M'Cs 'is -listed out •in Annexure-IV.
e. Below 10% rejection in the municipalities is fisted in Annexure-V.

- Among the RCC rented houses shown as rented, 40% are faun'd Ito be own houses and hence ineligible. It is requested to scrutinise ROC ren't3hOUses properly before according sanctions.
  - The Addi Commissioners Vikarabad, Nizamabad, Mahab.uba-b^{t}ad) Ja•n.gaon, Nagarkurnoo! requested to focus on grounding and verification of baTa•i6ce villages/wards.
  - The Municipal Commission'ers Warangali khammarn wereéinformed .that they have already started the veriflcati:o.n but not reflected (n •the: Fäport$.
  - Directed to verify all the Urban Ll applications through mobile •llnk immediately and do aadhaar authentication by obtaining from applicants.
  - Ali the verified applications are to be pushed into online in the Indlramma portal.

3, *GENERAL INSTRUCTIONS:

OJI

- Identify one brlck production Unit in selected villages.

C) utJ'ltse the available Nlrmithi kendras and focus on re-startjng (the brlck productlons-SERP officer to involve,

C) Tag maSon- tag rnaterial to make the programme successful.

- Pönchayath secretary must be a friend/ Phllosopher/ guide to b.en.efldary to construct her/his house.
- MPDOs Shali arrange for visit of beneficiaries to Demo houses.
- AES (Housing) shall guide benefjclarles to construct houses within the prescribed plinth area and using affordable construction technologies.

CD Thé approximate cost for construction of a 400-sft house will be Rs.5 lakhs Rs. 1,50 lakh tov mason charges and Rs.3.50 lakhs C) towards material cost.

- MPDos/MCs may convene a meeting with masons and ensure that they don't charge on the higher side, due to spike in demand.

Sd/-05.04.2025

M'anaging Director C)

The All the Additional Co}tectors (LBS) in the State. C) Ail the Project Directors, Housing,

All the MPDOs/MCs through the PDs(H).

C) Copy to all Collector & Executive Directors, Housing Corpora%n-of all D(StrIcts,

O

//Attested//

C) Superintending Engineer(Schemes)

C)

C)

Annexure- I

1.Kamareddy	Nlzamsagar
2.Kamareddy	RaJampet
3.Medak	Tupran
4.Muiugu	VVäzeed
5.Nirmal	Mudhoie
6.Rajanna Slricilla	Yellaredd!pet
7.Siddipet	Béjjanki
8.Siddlpet	Chlnnakodur
9.Sidd(pet	Jagdevpur
10.Siddipet	Raipole
11.Mahabubabad	Gangaram
120Medak	Shankarampet(A)
13,Kamareddy	Nasuruliabad
14.1<amareddy	Pitlam
15,Mahabubabad	Danthalapaife
16.Mahabubabad	Kuravi
17.Rangareddy	JilledChowdergudem
18 Mulugu	MUtugu
19.Joguiamba	UndaveMy
20,Adllabad	Narnoor
21JoguIamba	KaloorThimmandoddi
22.Suryapet	Suryapet

C)

Zero percent rejection after re-verification which is to be re veri Fled again c

Annexure- I

Verification fication not yet started Mandals In Rural areas

1.Adilabad	Neradigonda
2.Kamareddy	Naglreddypet
3.Kamareddy	Yellareddy
4.Medak	Chilpched
5.Medak	Kowdipalll
6.Medak	Shankarampet(R)
7.Medak	Tekmal
8.Medchal	Ghatkesar
9.Medchal	Keesara
10.Rangareddy	Madgul
11.Suryapet	Chinthalapalem

C)

C)

C)

C)

C)

(2)

Annexure —II

C)

O

Annexure-lll

Rejectjon percentage is beiow 10% -Re-verification required

SI No	Dlstrict	Mandal	% of rejectlon
1	Nagarkurnool	BIJlna alte	9.84
2	Siddipet	Narayanaraopet	9.76
3	•Vlkarabad	Bomraspeta	9.7-5
4	Adllabad	Bheempur	9,74
5	•Vlkarabad	Doma	9.62
6	•Vtkarabad	Yalal	9,60
7	Narayana • et	Nara an et	9159
8	Sangareddy	AndOle	9.29
9	Karimnagar	Jammlkunta	9.25
10	Slddlpet	Ga)wel	9.20
11	Bhadradri	P!napaka	9,13
12	Warangal	Parvatha ICI	9.10
13	Kumurambheem	Dahegaon	9.08
14	Nizamabad	Jakranpalle	8.91
15	Medak	Medak	8.86
16	Mancherial	Kasipet	8.81
	Vikarabad	Tandur	8.76
18	Peddapalll	Anthergaon	8,71
19	Mulugu	Eturnagaram	8.69
20	Medôk	Yeldurthy	8,65
21	Siddipet	Husnabad	8,65
22	Yadadri	Bhon ir	
23	RajannaSlriGlIla	Mustabad	8.53
24	Nizamabad	Varnl	8,45
25	Jogulamba	Ra oli	8.43
26	Jogulamba	Maldakal	8.34
27	Karimnagar	Eltandakunta	8.31
28	Khammam	Penubally	8.24
29	Mahabubna ar	Nawabpet	8.14
30	Rangareddy	Amangal	7.83
31	Ran areddy	Moinabad	7.79
32	Nizamabad	Armoor	7.75
33	Vlkarabad	Kodangaf	7.66
34	Mancheriai	Dandepally	7.58
35	Suryapet	Palakeedu	7.45
	Yadadrl	Thurkapally	7.37
37	Khammam	Kallur	7.37
38	Peddapall}	Odela	7.35
39	Khammam	Thallada	7.35
40	Hanumakonda	Nadlkuda	7.33
41	Vikarabad	Kulkacharla	7.08

si No	District	Mandat	% Of fe]dction
42	jogulamba	itik al	
43	Jagitlal	Korutla	6,93
44	Sangareddy	Manoor	6.91
45	Narayanapet	Dhanwada	6.79
46	Adllabad	Sirlkonda	
47	Karimnagar	Choppadandl	.6}49t
48	Nagarkurnool	Tadoor	qt4a,
49	RajannaSiricl{la	Chandurthì	6.38
50	Adilabad	Ichoda	6129
51	Siddipet	Kondapak	6.20
52	Sur apet	Nagaram	
53	Nirrnal	Nirrna! Rural	6.13
54	N•iz.a mabad	Navipet	6.09
55	Mancherial	Mandamarri	6.08
56	RaJannaSiricilia	Veernapa.fli	6,05
57	Jogulamba	Dharur	
58	KarinTlagar	Shankarapatnam	.5;92
59	Jagitiai	Kathalapur	stêo
60	Nizamabad	Rudrur	5,716
61	Jagitial	Jagitial Rural	
62	Bhadradri	Gundala	
63	Rangareddy	Taiakondapplle	5158
64	Bhadradri	Julurupadu	5ss
65	RajannaSiricilla	Konaraopet	
66	l<arnareddy	Blbi et	5.18
67	Bhadradri	Chandrugond.a	_sslz
68	Suryapet	Mothey	5.13
69	Warangal	Nalla Belli	
70	Nizamabad	Balkondo	8,02
71	Muiugu	Govlndaraopet	5.00
72	San areddy	Zahirabad	s.00
73	Narayanapet	Makthal	4.95
74	Vikarabad	Douiatabad	41,94
75	Rangareddy	Keshampete	_4%9À;
76	Jayashankar	Kataram	4.87
77	Sangareddy	Nara ankhed	
78	Sangareddy	Patancheru	4.7,6
79	Mancherlai	H.a?ipur	
80	Nirmal	Kubeer	
81	Jogulamba		
82	Narayanapet	Utkoor	
83	Slddlpet	Wargal	4:99
84	Sangareddy	Hathnoora	
85	Nirmai	Khanapur	4.À;8F

% of rejection
7.06
6.93
6.91
6.79
6.57
6.49
6.43
6.38
6.25
6.20
6.19
6.13
6.09
6.08

O

C)

12)

C)

C)

C)

O O

O

C)

C)

SI No	District	Mandal	% of reJectlon
86	Medak	Ramayampet	4.47
87	Ni•rmaf	Dasturabad	4.23
88	Hanumakonda	Kamałapur	4,19.
89	Jogulamba	Waddepa(le	4.014}
90	Nizamabad	Bodhan	4,02
91	Nirmal	Dl(awar ur	3.95
	Mancher)al	Jannaram	3.90
93	Njrmal	Kuntala	3.88
94	Jangaon	Devaruppu(a	3,86
95	Vikarabad	[illegible]	3.78
96	Sangareddy	SI [illegible]	3176
97	Sangareddy	Sirgapoor	3.70
	Vlkarabad	Basheerabad	
	Adilabad	Gadlguda	3.41
100	Peddapa(ll	[illegible]	3,40
101	Siddipet	Mulug	3,32
102	Jogulamba	Ghattu	3.24
103	Pedda all)	Ramaglri	3,22
104	Sangareddy	Nagalgidda	3.12
	Karlmnagar	V.Sa[dapur	3,08
106	Siddipet	Ruraf	3.06
107	NIrmal	Bhalnsa	3,06
108	Sangareddy	Kohir	2.93
109	Kumurambheem	Ka [illegible]	2.93
110	Sangareddy	Kondapur	2.88
11.1	Jagitiai	Raika, [illegible]	2:78
112	Mulugu	Tadval	2.70
113	Wanaparthy	Weepangandla	2.63
114	Jagitial	Saran a . ur	252
'115	Kamareddy	Madnoor	2,43
116	Sangareddy	Munipaily	2.32
1117	Kamareddy	Bhiknoor	2.31
118	Siddipet	Siddlpet Urban	2.29
.119	Nizamabad	Mupkal	2.15
120	Warangal	Nekkonda	2,07
'121	Kamareddy	Jukkal	2,05
122	Medak	Shlvam et	1,93
123	Nirmal	Lokeswaram	1,91
124	Nizamabad	S)rkonda	1.90
125	Nizamabad	Renja)	1.84
126	Kamareddy	Gandhari	1.78
'127	Nlzamabad	Dich alle	1.77
128	Nlzamabad	Yedapalle	1,75
129	Mancherlal	Jaipur	1.65

-SI No	District	Mandal	% of reJectlon
130	Sangareddy	Vatpally	1.51
131	Jayashankar	Ghanapur (Mulug)	3.70
132	Siddipet	Maddur	3.54
133	Nirmai	Kaddam (Peddur)	1.34
134	'Medak	Alladurg	1.32
135	Mahabubnagar	Devarakadara	fi26;
136	Kamareddy	Bichkunda	
137	Bhadradri	Alla	
138	Sangareddy	Kather	
139	Nlrmal	Soan	
140	Sangareddy	N alkal	
	Nârayanapet	Magamoor	1.16
142	Mahabubnagar	Kotlkònda	1.15
	Mancherial	Luxetti et	.1..02
	Mancheriai	Chemur	
145	H.anumakonda	Parkal	
146	Jagitial	Pegada a Ft	3*94
147	Mancheriaf	Bheemini	
148	Mahabubnagar	Bhoothpur	
149	Medak	Papannapet	
150	Kamareddy	Machareddy	.0.86
151	Mahabubnagar	Addakal	
152	Manchefial	Tandur	0.83
153	Jagitial	Mâijapur	
154	Jayashankar	Bhupalpalle	o, 76
155	Siddipet	Doultabad	0,7.5
156	Siddipet	Mirdoddi	Q, 74
157	Jagitial	Velgatoor	0.92
152	Jagitiaf	Dharmapurl	0,72
159	Siddipet	Koheda	0167
160	Sangareddy	Sadasivpet	0.54
161	Nirmai	Laxmanchandà	Q.si

162	Siddipet	Thoguta	"Otso
163	RajannaSirIciila	Gambhlraopet	o•Sp
164	I<amareddy	Banswada	0:47
165	Karimnagar	Thimmapur (L*M.D.)	
166	San areddy	Raikode	0.44,
167	Sangareddy	Kangti	0,33
168	Mancherlal	Kannepally	
169	Mahabubnagar	Mahabubnagar	0.26
170	Kamaredd	Sadashlvanagar	
171	Siddipet	Markook	
172	Kamareddy	Blrkur	0:12
'173	Siddipet	Nanganoor	0.-11•

% of rejection
1.51
1.41
1.41
1.34
1.32
1.26
1.24
1.24
1.21
1.21
1.20
1.16
1.15
1.02

C)

	Distrlct	Mandal	% of rejectlon
17-4	Kamareddy	Llngampet	0.10
1775	Jagltlal	Gollapalli	0.10
	Sangaredd	Jharasangam	0.08
	Kamareddy	PeddaKodapgaf	0.06

Annexure-IV

Vetlflcatlon not started In the Municlpalities/MCs to be started wlth •O.TP [based Àadhar authenticatlon

SI no	Dlstrict	Munlcipallty/MC
1	Hanumakonda	Warangal Municlpal Corporation
2.	Khammam	Khammam Municlpal Corporation
3	Rangareddy	Meer et Munici al Corporation
4	Adliabad	Adllabad Munlclpatity
5	Mahabubnagar	Mahabubnagar Municipality
6	Kumurambheem	Kagaz Nagar Municipality
7	. Jo ulamba	Gadwal Munici allty
8	Bhadradri	Mariuguru Municipallty
9	Nizamabad	Bodhan Municlpaiity
10	Rangareddy	Jaipaliy Munlcipa!ity
11	Suryapet	Surya et Municipa!ity
12	Khammam	Wyra Municipality
IB	Suryapet	Kodada Munlclpality
14	Sangareddy	Zaheerabad Munlclpa!ity
15	Suryapet	Thirumalaglri Municipalit
16	Kamaceddy	Kamareddy Muntclpaiity
17	Jogulamba	leeja Municipality
18	Bhadradrl	Kothagudem Municipality
39	Medak	Medak Municipaiity
20	Bhadradri	Patwancha Municipality
21	Nagarkurnool	Kollapur Municipality
22	Jagltial	Jagtia! Municipality
23	Rangaredd	PeddaAmberpet Municipallty
24	Rangareddy	Turkayamjal Munlcipality
25	Nagarkurnool	Nagarkurnool Municlpality
26	Suryapet	Huzurnagar Municipal}ty
27	San areddy	Sadasivpet Municipaiity
28	Khammam	Madhlra Municipality
29	Mahabubnagar	Jadcher±a Municipality
30	Jagltial	Korutla Munlcl ality
31	Mahabubabad	Marl eda Munici a(lty
	Nlzamabad.	Armoor Munlcipality

Sl no	Dlstrlct	MunlCJpptlty/MC
33	Nagarkurnoo!	Kaiwakurthy Municip:allty
34	Sangareddy	Narayankhed Munic(pailty
35	Rangareddy	ibrahimpatnam Municipality
36	Medak	Toopran Munlci allty
37	Suryapet	Nereducharla Munici ality
38	Ran areddy	Thukku uda Munfcl% ality
39	Ranga reddy	Adlbat'la Mfilclpall!ty
40	Medak	Narsapur Municipality
41	Rangareddy	Amangal Municipal.lty
42	Kamaredd	8answada Municipality
	Sangareddy	Sangareddy Municipality
44	Khammam	Sathupafly Munici _ality
	Nagarkurnool	Acham • et Munlclpafity
46	Mahabubabad	Thorrur Municipality
47	Mahabubnagar	Bhoot ur Municipaiity
48	Mahabubabad	Dornakal Municipality
49	Jagitial	Ralkai Municlpallt
50	Kamaredd	Yellaredd Municipailty
51	Sangareddy	AndolJogl et Municipality
52	Rangareddy	Shankarpa!ly Municipality
53	Karimn•agar	Kotha ali.y Municipalit
54	Vikarabad	Parigi Munlcipality
55	Nizamabad	Bheemgal Muni'clpality
56	Rangareddy	Kothu.r Munlclpality
57	Sangareddy	Ameenpur Municlpality
58	San aredd	Boliaram Municipality
59	Rangareddy	Manikonda Municipality
60	Sangareddy	Tellapur Municipality

Annexure-V

(3

Below 10% rejection In the municipalities which requires -re-vert.ficåtil@fi• .wi€h Aadhar based OTP

Sl No	District	Munic)paljty	% rejectlö,fi,
1	RajannaSjricilla	Vernulawada Municipality	5-.85
2	Mancheriai	Mancheria{ Municipality	9.77
3	Rangareddy	Narsingi Municipality	
4	Yadadri	Mothkur Municl ail.t.y	939
5	Karimnagar	J.ammlkunfa Muntglpaltty	7$4St
6	Karimna ar	Choppandandi Municipal.lt,y	
7	Nara anapet	Kosgi Mun!cjpalit	7.31.
8	Mancherial	Naspur Municipality	7.03

G)

C)

C) Managing Director

C) / Attested/

Sl?No	Dtstrlet	Municipality	% rejectlon
9	Narayanapet	Narayan et Municipallty	6.52
10	Kar}mnagar	Huzurabad Munlcipality	6.08
11	Warangal	Narsampet Municipality	5.62
12	Mancherial	Kyathanpally Municlpallty	5,Q5r
13	Ped$palll	Sulthanabad Munlcipallty	3.85
14	Yadadri	Choutup al Munlclpailty	3.43.
	•JayaShankar	Bhupa)palle Municl ality	3.43
16	Medchat	Dhamrnaiguda Municipality	3.39
17	Yadadri	Yadagirigutta Municipality	3.22
18	Vikarabad	Kodängal Munici allty	2,61•.
19	Nirmal	Khanapur Municipality	O. 84
20	Hanumakonda	Parkai Municipality	0.47
21	Rangareddy	Shadnagar Municlpality	0.13
22	N algonda	Nalgonda Municipality	0.03

Sd/05.04.2025

o

sted/

Superintendlng Engineer

(Schemes)

C)

O

Q)

C)

C)

J 205

0

TELANGANA HOUSING CORPORATION LIMITED,
H.NO.3-6-184, STREET NO-17, HIMAYATNAGARr HYDERABAD-29

CIRCULAR

O Lr.No.1116/TGHCL/E&P/1NDIRAMMA INDLU/2024, 15404.2025

Sub:- TGHCL- Indirammälndlu- Phase II- Selection of beneficiaries By INDIRAMMA Committees and verification by Mandal Levei Gezetted Officers -Guidelines issued - Reg.

Ref: 1. G,O.Ms.N0, 7 TR&B Dept (RH&CA.I) Deptdt 09-03-2024,

2. Govt.Memo. No.6375/RH&C.A1/2024,Dt.12.12.2024 of T/R&B Dept.,

3. Govt.Mem0.N0.582/GenJ. L&C/2025/ Dt.18.01.2025 of Chief

C) Secretary to Govt. / GAD 9General/ L&C) Dept.,

4. Circular No. 116/TGHCL/E&P/1NDIRAMMA INDLU/2024,

O Dt.25.01 .2025.

-000-

Kind attention is invited to the subject and references cited above.

The Hon'ble Chief Minister during the Collectors Conference held on 14.04.2025, has instructed the District Collectors to go ahead with INDIRAMMA INDLU Phase-Il sanctions @ 3505 per Assembly CD constituency, duly deducting the pilot phase sanctions:

C)

In this connection, the following further guidelines are hereby o issued on sanction of houses under Indirammalndlu Phase-Il'

o 1 . AMocations to the village / ward wili be finalized in consultation with the public representatives, in proportion of the population or no,of eligible applications.

2. Poorest of poor among the eiigibie applicants will be selected and the said list witl be given to Gazetted officers for a thorough field verification,

3. Care should be taken to ensure that the most vulnerable segments like homeless, hut-dwellers,transgenders, disabled/ widows with minor children, etc. are included, Such cases are green-flagged by the system.

C)

4. The Mandal level Gazetted Officer appointed by the Collectors @ one per 200 houses shall verify their eligibiljty duly certification in the check list prescribed, They are fuliy and wholly responsible for ascertaining the eligibility, Due caution to be taken to ensure that no ineligible family is given benefit. Collectors shall ensure that the Gazetted officers are fully trained and ably assisted by local official like GP secretary/ward officer.

5. The verification sheets signed by GP secretary andGazetted officer shall be preserved at Mandal offices/ Municipal offices, MPDC)s/ MCs are responsible for the safe custody,

6. After scrutinizing the filled checklists and other relevant data including that collected during Indirammaindlu survey, the MPDO /

C) MC on satisfaction shall forward only the applications of eligible beneficiaries proposed for sanctionon the Indiramma portal to the collector.

7 , Red flag appiicants (identified by Al/ 360 degree/etc.) shall be verified by Collector on desk verification/ re-enquiry if required,

C) 8. On satisfying himseJf/herself, the Collector shall download the list from the system, print it and prepare a physical file for approval of e) the District In-charge Minister,

9. After approval of the District In-Charge Minister / the District Collector shall accord Bulk sanctiononline, duly affixing his/her Digital signature.

C)

C)

The Collectors are requested to avoid offline/ manual lists at any stage after verification, to prevent bogus/ unauthroised/unverified entries from creeping in. C)

The exercise is tim.e bound and shall be completed by 5 th of May,

boz

Instead of waiting for the entire list of beneficiaries, approvals may be processed as and when verification in a few GPs/ mandalsare completed.

The above instructions do Not apply to GHMC.

Sd/Dt.15.04.2025

Managing Director,

All the District Collectors in the State

Copy to alt the Project Directors (H) in the State Copy to all AC(LB)s/ Additional Collectors.

Copy submitted to Secretary to government/ TR&B(Housing).

copy to PM CGG.

A tested/

Exec ti eyngineer

C)

C)

C)

C) 211

C)

TELANGANA HOUSING CORPORATION LIMITED H.No.3-6-184,streetno
17/ Urdugalty lane, Himayathnagar;Hyderabäd-29

To

V.P.Gautham, IAS
Managing Director

All the District Coi'lect•ors in the
State

L r. No,3882 /TGHCL / INDIRAMMA INDLU/Monitoring/2025, Dt,24/4/2025.

Sir,

(3 Sub. TGHCC- Indiramma Indlu. - Grounding of Houses with more than •600$ft piintmarea- Rep.ort called for on the eligibility of beneficiary Regt

Ref: 1 AE verification report jn port?l de 21,0412025t

2, This Office circular No, Circular No.III6/TGHCL/E&P/ INDIRAMMA INDLU/2Q.24/ Dt,09/03/2025.

C) Kind attention is invited to the subject and reference cited above.

As seen from the AE verification report on grounding of the houses 21.04.2025/ it is observed that 285 houses are constructed with plinth area more than 600sft. As against 2832 basements completed(as reported

o by GP Secretaries). The list of such beneficiaries enclosed here with,

In this regard it is to inform that/ even after clear -instructions from this office are issued from time to time/ to see that the houses shall constructed with 400-500 sft, some of the beneficiaries are resorting to O higher plinth area of more than 600sft, In thls case, the cost of constructiön

may go beyond Rs. 8/00/000/ Thjs wili .

C)

a) Raise a questlon on the BPL category of the beneficiary

b) Objection from the Government of Indla,

C) c) Objection from Audjte

d) Stopage of work in the mid-way due to huge required contrib.ution beneficiary side.

C) e) Forcing the beneficiary into debt p trap,

f) Foregoing the objective of the scheme,

C) 213

C)

C)

these a.h.erefor,e, it is requested to inquire on the eligibility (BPL status) of these beneficiaries who are constructing houses with rnore than 600 sft.

Sd/- 24.04,2025

Manäging Director

Copy to the Project Director(H) for necessary action

//Attested///

Supertntandihg Englneet(Schemes)

houses -constructed with plinth area more than 600 sftr

Si.No	District	No of •appl'icantg
1	Nalgonda	42
2	Siddipet	35
3	Peddapalli	34
4	Suryapet	29
5	Rangareddy	19
6	Sangareddy	18
7	Medak	16
8	Narayanpet	14
9	Khammam	13
10	Mulugu	
11	jagitial	7
12	Kumuram Bheem Aslfabad	7
13	Mahabubabad	5
14	Nagarkurnool	5
15	Hanumakonda	4
16	MedchaJ Malkajlgjri	4
17	Rajanna Sircjila	4
18	Vikarabad	4
.19	Jangoan	3
20	Mahabubnagar	3
21	Nlzamabad	3
22	Wanaparthy	3
23	Adilabad	1
24	Bhadradrl Kothagudem	1
25	Jayashankar Bhupalapally	
26	Ka rl mnagar	1
27	Yadadri Bhuvanaglri	1
	Total	235

mandal_name	village_name	constituency_name	application_id	applicant_name	
			194929/177185	Chakati Sujatha	
3	nka Mallaram	PINAPAKA(ST)	279762/480045	SWANATHULA PRASANNA	
	Bheemdevarapalli	a	0/1586603	PACHU N	627.45
Bheemad e /arapalli	Bheemdevarapalli	O	200960/2164337	RANI	
Velair	Shalapalli	PUR(ST N	213430/23319	Guguloth Ramu	
	Shalapalli	UR(STN)	213430/86243	Kurapati Rajaiah	622.04
		JAGTIAL		CHIKRAM PARVATHI BAI	765
			064/175601	BOJANAPU PA O	
Dharmapuri	Kamalapur	DHARMAPURI(SC)			
Dharmapuri	Kamalapur	DHARMAPURI(SC)	064/1655647	PUDARI RENA	
Jagitial Rural	Kandalapally	JAGTIAL	201300/475202	GUGGILAM MOUNIKA	
Kodimial	Ramsagar	CHOPPADANDI(SC)	201470/545296	Konda kalpana	10
Pegadapalli	Legalamarri	DHARMAPURI(SC)	201785/3524341	BANNA SHAKUNTHALA	
Velgatoor	Rajarampalli	DHARMAPURI(SC)	202062/626696	indurilingamma	
Bachannapeta	Salvapur	JANGAON	213302/5075879	GUDAPU LAXMI	
Ghanpur (Station)	Thanedarpalle	GHANPUR(STN)	213552/4568530	GADE VENKATAMMA	10
Thatigoppula	Vachya Thanda		279265/117210	guguloth sadanal.	
Mogullapalle	Ankushapur	BHUPALPALLY	063/1849997	Kandarapu Janardhan	
Ganneruvaram	undlapaly	MANAKONDUR(SC)	200943/6059799	KALUVA RAJU	
	Repallewada	WYRA(ST)	202329/619454	BANOTH NAGAMANI	
mam (Rural)		PALAIR	202402/462574		
Khammam (Rural)		PALAIR	202402/617473	Jinaka Laxmi	
Khammam (Rural)	Arempula		202402/614110	GUDIPATI SWATHI	
Khammam (Rural)	Arempula	PALAIR	202402/525118	CHENNABOINA SAIDAMMA	
Khammam (R	Arempula	PALAIR	202402/51742 O	KONDRU NAGA MANI	
Khammam (Rural)	Arempula		202402/536810	Meesala Sumitra	
Khammam (Rural)	Arempula	PALAIR	202402/621485	NUKALA SATHYAVATHI	
Madhira		MADHIRA(SC)	202554/4621422	KUKKAMALLA NARENDRARAO	
	Kodavatimetta	SATHUPALLY(SC)	202739/1964991	BADDAM RANGAMMA	

House constructed with plinth area more than 600 sft.

| δ strict_name | | |

30 Khammam		Yerrupalem	Rajupalemarapadu	MADHRA (SO		280205 - 1148761		RIDDY			648
		Yerrupalem									630
32	Asifabad		Rabapur	SIRPUR			195361329319963				638
33	Kumurambheem Asifabad	Kouthala	Nagepalli		SIRPUR	281888 - 233810			VADAKWAN; ULA		665
34	Kumurambheem As...fabad	Kouthala	Nagepalli		SIRPUR				VADAISHOBA		715
35	Kumurambheem Asifabad	Kouthala	Nagepalli		SIRPUR	281888 2513 0			SONDLEPADMA		784
36	Kumurambheem Kouthala	Nagepalli	SIRPUR Asifabad				281884 - 5557335		Gurlereeauka		726
37	ad	Rettipen	Partgaon	ASIFABAD(ST)			281880 - 622095		GURLEJYOTHI		790
	Kumurambheem A 2d										
			Jbanda								
•40			1%Janda								745
41			nda						-MEERAVUAYA		783
42									BAOLI SUNITHA		69
											·635
											66
47 Medak		nta	-JathramhGuda	DUBBAK		2 780667589938					776
48 Medak		Chegunta		DUBBAK		278913 7 408					
49 Medak		Chegunta	Jathramflanda	DUBBAK		278913637855					
50 Medak	Koudipalli		Venkatapur-R	NARSAPUR		281136 2739021					
									RoddaManura		675
52 Medak		Medak	Bolonagar	MEDAK		2812767 4966732			ATH-ARAMAA(p).		578
53 Medak		Medak	Bafanaga	MEDAK		281276231156					545·41

appl

| | | |

7

0

(2

rict_name	mandal_name	illage_name	nstituency_name	application_id	applicant_name
		elukantigudem		207550/528931	NAKKA PARVATHAMMA
	Kanagal	elukantigudem		0/452344	NAKERABOINA
	Kanagal			207550/1508476	Nama Laxmi
	Kanagal	kantigudem		207550/4525007	VATTIKOTI PARVATHAMMA
	Kanagal		NALGONDA	207550/473288	BONGARI BIKSHMAIAH
	Kanagal			207550/4732579	AITHAGONI NAGALAKSHMI
	Kanagal			207550/4	VATTIKOTI ARUNA
	Kanagal	Telukantigudem		207550/1	NAMA SUHASINI
	Kanagal	Telukantigudem		207550/4374537	RAPANI SAIDAMMA
	Kanagal	Telukantigudem		207550/3	BOGARI MANJULA
Nalgonda	Kethe Pally	lppalagudem	AKREKAL	280702/105936	MANTIPELLI DEVAKAMMA
Nalgonda	Marriguda			280828/238585	METHARI YADAIAH
Nalgonda	Marriguda			280828/215649	METHARI SUJATHA
Nalgonda	Marriguda			280828/202190	VANAM ARUNA
Nalgonda	Marriguda			280828/245580	METHARI NIRMALA
Nalgonda	Marriguda		MUNUGODE	280828/219750	METHARI RAMULU
Nalgonda	Marriguda			280828/5307167	
Nalgonda	Marriguda			280828/1693143	LAPANGI SWAPANA
Nalgonda	Marriguda			280828/4529400	METHARI KALAMMA
algonda	Marriguda		GODE	280828/613305	KAKKUNURI CHINNA PAPAIAH
	Marriguda		MUNUGODE	280828/4656544	METHARI SUNITHA
	Nakrekal			262982/2035765	BUDIGE KALAMMA
	Nakrekal			262982/268617	BUDIGE YADAGIRI
	Nalgonda	ndlapally	ONDA	207829/1854964	Yerpula Punnamma
Nalgonda	Nalgonda		NALGONDA	207829/7604013	VALIKI YADAMMA
	Shali Gouraram		THUNGATURTHY(SC)	208084/1918152	Aleti nagamma
Nalgonda	Thipparthi	Thanedarpally		208124/8903272	JERRIPOTHULA SANDHAYA
Nalgonda	Vemula Pally	Annapureddy Gudem	AGUDA	208213/320089	MASIMUKKU NAGALAXMI
Nalgonda	Vemula Pally	Annapureddy Gudem	MIRYALAGUDA	208213/268792	

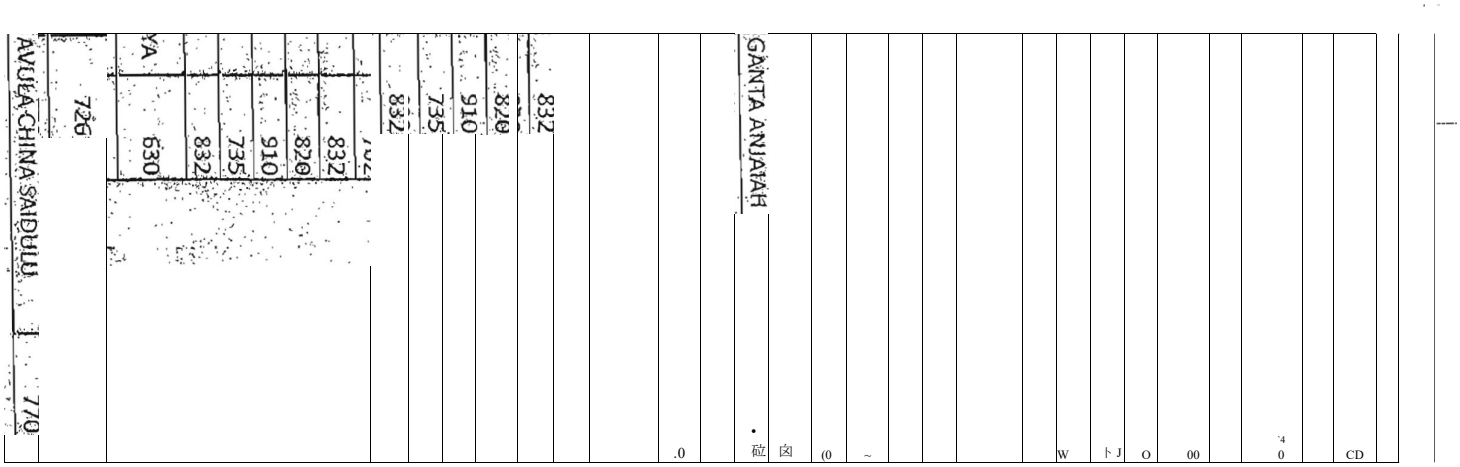

0

0

(1)

0

0

0

(0

(0

0 (9

0

2 | | 0A

SLL

1/0WA00

BJXY019

1

S0

S6B5SQZ

1

AA-AYA1F

VNNOOO

0 R1/73

2/ 250~

pen

0

VPS

0/0/0

VYI

0/0/0

SSIT

A1AAA1H1JIT

pW-WI

AYA1-1/0

1

AXQNXOYA-W-qy-S-2HaA-1qaH-

AYAA-1-1H

1

1

1

N 61t

N ZO

		P ゎ DA ヤ ヒ	2019	DASARISWAP	
3~ dd 宣		t ⊓ ap =	PEODA´	2C199	
164 ⊃ P ap =			ODA ヤ	20199	・6】」 ―U・RA ヤ」 A ｜ AH
	宗ら ad ・		VÉD	19907	2 昼ヤ
	ら川 尊 鄭 ヤ 三 ぬ d		POD	20 9	SGom
167 ら 2 を 2		Kat ∩ ゎ 2 川	PEO	g199	ＳＡ ＫＩＭ
ゑ 8		・ t ⊓ ぬ a 川	´	2019	GAD
169´ Podd		K 三 鄭 a ゎ 2=1	´	20199	GA ヤ ら
170		Kat ∩ 2 ゎ 2 ｜ =	PED	201	No ヒ ⊓ d 宜 く ⊆ ⊓ u
17 1	Pdda ∩ 2 川 S tha2 ゑ åd	K ⊓ 2P2 川	PED	20←9	UNDAi {
172 ´	PoddapaBi	长 29a ゎ 耕 ヤ =	PEDDA	201990	.KYAD´ AS ｜´ PRA
173	Raｊ a ⊓ ⊓ 三 ゑ ″ a ⊆ 2 m 生 川 0et	Da m m 3 ⊓ ⊓ 2 ゎ et	SIRC {		A S 日 OB A- AN ⊢
17 4.	R 3 ⊓ ″ ⊓ 2 ゑ 「cilla	Ra(iap	SiRCI	20 ´	
175´ R a ″ ⊓ ⊓ 2 「ciliaa 唱 沖 apa-川		｜	SIRCI	201955	
176・Ba] 3 ⊓ ⊓ 2 ら ｜ = ｜ a	m ha ⊓ g 崖=8P3 川	Ral(ap	SIRCI	20195	BOINt・【AX SA ヤ 0 沖 A
177. Rangar		Kapp	TB	21	

1

| | | |

…

€0

ZOZ

to

002

,66T

86

⌿ 61

96T

·S6t

·26T

6

06T

62T

-881

98R

•S81

81

E8i

Z81

181

08T

•6 I

0N' 1

S

208 Sang.ireddy Nyakul NyakulI SOJipet

209 Sang-ireddy Pulkul

210 Sang.ireddy Sadaivipet Yellaram

211 Sang.ireddy ZrhFiBad Chiraogja

212 Sang.ireddy Zahrabad Chiraggatie

213 Sang.ireddy Zahicabad Chiraggatie

214 Siddipet Ae-sinsap.et

215 S.ddipet Akkennapet

216 ˙Siddtpet e t

217 Sd Akkennapet

218 Siddipet Bejanki Veerapur

219 ,S...ddipet Bejjaaki Veerapur

221 Sid Ram 00 ˙

224 5...dd t G*jwel Gilipally

225 Sid.dipet Gajiwel Ginkilly

226 dd Gajiwe (

227 Siddipe t

228 Sjddipef Husæbad

229 Sid.dipet Husnafad

230 S lagdevpUf

1 | Sd˙dipe t

232

233 Sidläpet «ondupak Dammeika Y

234 Siddipet -KOX ldapEk MedoLN pur

235 Sid.dipet ~ | U g

236,Siddipet Lalelhnakkapaiae

237 Siddipet Mulug

238 Siddipet RajapoeRamaram

239 Siddipet Ra0 ˙ eRamaram

240 Siddipet Ra...0 | eRamaram

ZAHIRABAD ˙ SO 206 686 ˙ 47877184

ZAHIRABADSO 207064 ˙ 4088 438

GAJWEL 2 0 6264 7845594

GAJWEL 2062440E8506

GAJWEL

+ 4USNABAD 2 0 L 265946621

2 0 L 266 ˙ 1918371

2 0 2467459043

BIGAR RIKLAYMNA 875

TODEL ˙ 'IOTH(

BandiP00

BHUKYANKLTHA

REVOLUDRYAWA

RANGURANI

MYAKSONI A

COKINV˙ SHATATDA

BANGAON 2135627081 1

GAJWEL 2752125710 3

GAJWEL 2 0 6143 ... 8139 52

M...

GAJWEL 2065688422690

DUBBAK 2 0 6192233543 13

DUBBAK 206192 000072

DUBBAK 206192279338 20

AIRCHDUA

/PUTTKK ˙ RTHANA

Ve lkuteSonthu

640
705
525
671
644.8
684.2
739.35
818.96
647.5
647.5
669.37
625
655
649
632
668.86
672
696
777.2
8
735
644,

a Kotta Gude

age_n

| | | |

No	aistrict name	mandal name	n a [	constituency_name	appllation	applicant_	Area
270	Sur-yapet	Chikur	Ariaoudem	KODAD	207298 – 540502	BANDARU	785

271	Sur-yapet	Chikur	Ariaoudem	KODAD	207288 – 1182153	Moramvenkatarmma	645	272	Sur-yapet	Chikur	Ariaoudem	KODAD	207298443366	«Sonnerajyam	702				

275	Sur-yapet	Nalaeudem	K R Puram	KODAD	207794448 1804	ALIGUPAURANWNA	61 1 276	Suryapet	Thirumalagiri	277716 – 45 16	KO WanayakThanda	THUNGATURTHY	SQ 28032 37516677	-ISLAVATHIAGAN	7224 277... Suryapet	* Thirumalagiri	Kolleyanayak Thanda	THUNGA TURTHHYSQ 28032357859	(SLAVATHYAKAWMA	6726 2 78	Basheerabad	Khairampur	TANDOUR	78
		KURVAANURAOCHA			6916 279	Vikarabad	Dhaur	Ausupally	VISARABAD	MOL- LASABERABEGUM		4539000 280...	«Alkasabad	Tandur	Changeshpur	TANDUR	210523 157279 0	Yenkepally Gousamma	78 6 28 28	- Vikarabad	Tandur	Changeshpur	TANDUR	23 (52312)12579
282	anssthy	Gopalpeta	Chennur	WANNAPARTHY	205216 – 3894476	Anthamma	840							KURVAANWAKTHA	764.4									
283	Wanaparthy	Tahakota	Mahabubnagar	KOLLAPUR	2 0 8 4 0 – 4 0 9 0 8	1 1 2 2 9 5 0 4 9 9 8 8 8 0	8 2																	
284	Wanaparthy	Pangal	Midchevarapally	KOLLAPUR	280847 – 7958088	Mandla Kavitha	624																	

285 Yadadri Bhuvanagiri Bhongir Bandaloo maram BHONGIR | 2 0 7 1 7 9 6 2 6 1 1 AKUBHAGYAWMA 361

TELANGANA HOUSING CORPORATION LIMITED,
H.NO.3-6-184, STREET NO. 17, HIMAYATNAGAR, HYDERABAD-29

From
V.P. Gautham, IAS. /
Managing Director

To
All the District, Collectors,
in the State,

Lr.No.1116/TGHCL/E&P/1NDIRAMMAINDLU/2024,Dt.30.04.2025

Sir,

Sub: TGHCL- Indiramma Indlu - Execution of houses - Artificial hike of Material Cost and labour charges - Formation of Mandal level Committees - guidelines - Reg

Ref:1. G,O, Ms. No. 7, TRANSPORT, ROADS & BUILDINGS. (RH&C.AI) DEPARTMENT, dt.09.03.2024

Kind attention .is invited to the subject and reference cited.

With the onset of progress in Indiramma Indlu in villages, it is co observed that the Material Suppliers have hiked the prices of basic construction materials like Cement, Steel, Brick etc, ,.

Similarly the Masons have also started demanding excess rates for work. It is also. observed that the masons in the village are not allowing masons from outside village/town,

In order to address these issues, the Djstrict Collectors are requested to formulate Price Control Committees at the Mandal •level with Tahsildhar, MPDO/MunicjpaJ Commissioner, Labour Officer, Housing Engineer to oversee the prices of construction material & Mason Charges, C)

The Commjttees may also address the issues regarding supply of Sand to the Indiramma Indiu beneficiaries.

Yours faithfully,
Sd/-30.04.2025
C) Managing •Director,

Copy to all the Project Directors(Housing), in the State for information
w) and necessary action.

//Attested//

Superintendi ding Engineer g Engineer

GOVERNMENT OF TELANGANA
INDUSTRIES AND COMMERCE (MINES.I) DEPARTMENT

Memo No.1839/M1(1)/2025, dt.01.05.2025.

Sub Supply of sand to INDIRAMMA INDLU housing programme — certain guidelines issued — Reg.

Ref. 1) G. O. Ms. No.3, Ind. Comm. Dept. cit. 08-01-2015.
2) G. O. Ms. No. 11, Ind. & Comm. (M.I) Dept. cit. 13-02-2017. 3) Govt. Memo. No, 562/M.I(1)/2016-1, Ind. & Comm. (M.I) Dept., dt. 17-03-2016.
4) RC. No.2304 / TGHCL / E&P/ INDIRAMMA INDW / SAND C) /2024, dt.22-12-2024.
5) TGMDC/S&M/2024-25/ 1 0, dt. 15-04-2025.

The attention of all the Collectors and District Magistrates are invited C) to the subject and reference cited.

2, The Government of Telangana has launched new housing programme "INDIRAMMA INDLU" and planned to construct 4.5 lakh houses with a financial assistance of 5 lakhs with 100% subsidy. Each house need 25 O Cum. of sand.

o 3 . The Managing Director, TGHCL vide reference 4 th cited furnished the indent for supply of sand for the year 2025-26 for a total quantity of 112 O Lakh Cubic Meters (1,79,20,000 MT) for the total State under the INDIRAMMA INDLU, programme.

O 4. As per G. O. Ms. No.a, Ind. & Comm. (Mil) Dept., dt. 08-01-2015

o Sand Extraction in I & Il order streams .
i . Shall be for local use

O Free of Cost iii) For Weaker section housing schemes on a certificate issued

O by the District Collector or any authorized Officer.

C) 5. As per sub-rule 3 of Rule-6 of G, O. Ms. No. 1 1, Ind. & Comm. (M,I) . Dept., dt. 13-02-2017:

o "Sand used in the weaker section housing programme shall be exempted from payment of Seigniorage fee and sale price for IV to VI and above orders and sand extracted from de-siltation by the concerned construction authorities and the cost of loading and transportation shall be borne by the concerned construction authorities".

6. In the reference 3 rd cited, Government have issued certain guidelines to utilize IV th order strearns and above for local uses and the area to be marked less than 5 hectares in all such cases.

O 7. In this regard, a statement is prepared showing about the existing of I, Il and Ill order streams or above in the respective districts and where there is C) no sand available; it can be sourced from the neighboring districts as indicated for smooth supply of sand.

[P.T.O]

advised to fix the cost of loading and transportation of sand duly

fixing the rate per kilo meter per tonne for construction to be mairftained;

IV) If any shortfall of sand is observed, they may consider to have a second plan of supplying sand to "INDIRAMMA INDLU" from the

reaches allotted to M/S. TGMDC Ltd,

9 The above guidelines shall be followed tneticulously by all the Coilectors.

N.SRIDHAR
PRL. SECRETARY TO GOVERNMENT &
SECRETARY TO GOVERNMENT M

& GTo
The All District Collectors
Copy to:
The Secretary to Govt., Housing Dept.
The MDs Housing Corporation.
The VC & MD, TGMDC,
The DMG/ADMGs.

Encl, . 1) Rc.N0.2304/TGHCL/E&P/lNDlRAMMA /SAND/2024,
8, The following guidelines to be followed by all the Collectors in order to have smooth supply of sand to "INDIRAMMA INDLU'%.

1) To have 1, 11 & Ill streams ear-marked for "INDIRAMMA INDLU Program me";
Il) Wherever there are no streams of l, Il & Ill, the Collectors can ear mark the IV and above streams having less than 5.00 Hectares for supply of sand;
Ill) To also facilitate transportation of sand from the source to the location where "INDIRAMMA INDLU'j will be constructed and also
DT02, 12.2024 of MD, Housing Corporation along with statement showing the District wise, Quarter-wise requirement of sand.
2) Statement showing the District-wise source of sand available for Indiramma Indlu furnished by the VC & MD, TGMDC Ltd.

/ [FORWARDED : : BY ORDER/
/

SECTION OFFICER /
SECTION OFFICER

TELANGANA STATE HOUSING CORPORATION LIMITED,
H.NO.3-6-184, STREET NO.17t HIMAYATNAGAR/ HYDERABAD-29

YCMD Copy

From

Managing Director,

To

Mineral Development Corporation Dept., of Industries & Commerce. , Govt., of Telangana.
Telangana Secretariat.

V. P. Gautham, I. A.S., The Vice Chairman &
Director,

C)

C) RC.No.2304/TGHCL/E&P/1NDIRAMMA INDLU/SAND/2024,22/12/2P24

Sir,

. Sub: TGHCL - Sand - Allotment of sand for Housing Programme under INDIRAMMA INDLU - Reg.

Reft 1. G.O.MS No.7,TR&B(RH.A1) Dept., Dt 09.03.2024.

2. G.O. Ms.No.11, (Industries and Commerce (Mines.l) Dept.,)

C) Dt.13.02.2017

3. TGMDC/GM(S&M)/Sand/2024/1076 of Vice Chairman &

C) Managing Director, Department of Industries & Commerce. , Govt. Telangana.

-000-

Kind attention is invited to the ref. Y^O cited, where in it Is requested to

O submit quarterly requirement of sand for this financial year i.e., I ^SI January to 31st March and for next F,Y.2025-26 District wise.

o Ln this regard, it is to inform that the Govt., vide ref. cited has commenced the new houslng Scheme "INDIRAMMA INDLU" for construction of O 4/50,000 houses wlth a financial assistance of Rs,5100 lakhs with 100% subsidy. Each house of INDIRAMMA INDLU need 25 cum of sand.

C) It is requested to extend the same policy of Govt mentioned at G.O, Ms. 11, 2.2017of Industries and Commerce (Mines.l) Dept., for the free supply of sand to be used for INDIRAMMA INDLU programme.

Accord(ngly, the requirement of sand for tNDIRAMMA INDLU Programme is o worked to 112 Lakh Cubic meters. The District-wise, Quarter-wise requlrement is enclosed herewith for kind necessary action. o

Yours faithfully
Sd/-22/12/2024
Managing Dfrect.or

// Attested//
Supdt. Engineer

C)

C)

C) .

C)

, C)

Distrlct Wise , Quarter-wise Requirement of Sand

Dislrict	quantity tequirod In Curn for F.Y 2024-25 IV Quarter	quantity required in Cum .for F.Y, 2025-26				Total quantity required In Cum
		25-26 • I Quarter	25-26 - I 1 Qua rter	25-26 - Iti Quarter	25-26 • IV Quarter	
1 ADILABAD	66750	66750	66750	66750	32040	299040
2 BHADRADRI	125000	125000	125000	125000	60000	560000
HANUMAKONDA	58335	58333	58333	58333	28000	261332
4 JAGTIAL	58336 58"333	58333	58333	58333 5>333	28000	261332
61JAYASHANKvAR	19444	58333 19444	58333 19444	i 9444	28000 9333	261332 87109
7 JOGULAMBA	38889	38i89	38889	38889	18667	174223
8 KAMAREDDY	58333	58333	58333	58333	28000	261332
9iKARlMNACAR	77778	77778	77778	77778	37333	348445
10 KHAMMAM	i 13889	113889		113889	54667	510223
KOMRAM B HE EM	66256	66256	66256	66256	31 803	296827
12 MAHABUBABAD	44444	44444		4 44	21333	199109
1 3 i N,'AHABUBNAGAR	58333	58333	58333	58333	28000	261332
f 4 MANCHERIAL	69444	69444	69444	69444	33333	311109
15 MEDAK	388Fä	38889	38889	38889	8667	174223
ME OCHAL	9iü2	97272	9+222	97222'	46667	435555
17 MULUGU	361 11		3611 1		17333	161777
NAOHRKURNOOL	80556	80556	80556	80556	38667	330891
{AGONDA	116637	1 16667	i 16667	116667	56000	522668
NA RAY AN PE T	38889	38889	38883	38889	18667	74223
NiRMAL	58333	58333	58333	58333	28000	261332
22 NIZAMABAD	1 16667	1 16867	116667	1 36667	56000	522668
23 D EODAPALLE	58333	58333	58333	58333	28000	261332
24 RAJANNA SIRCILLA	64978	64978	64978	64978	31 189	291 101
25 RANGAREDDY	55556	i 55556	1 55556	159556	74667	696891
;SANGAREDDY	97222	97222	97222	97222	46667	435555
27 SIDDIPET	77778	77778	77778	77778	37333	348445
28 SURYAPET	77778	77778	777ii	77778	37333	348445
1 29 VIKARABAD	77778	77778	77778	77778	37333	348445
30 WANAPARTHY	19444	19444	19444	19444	9333	87109
L 31 WARANGAL	43683	43683	43693	43683	20968	195700
32 YADADRI	38889	38889	38889	38889	18667	174223
33 GHMC	291668	29±64 2500ööo	291668	291668		1306672
	2500000		2500000	2500000	200000	200000

(D

C)

C)

C)

(D

C)

C)

Quantity required CBMl for FY 2025-2

| Name of the Erst. District | Name of the District | | |

| | | |

'LELANGANA HOUSING CORPORATION LIMITED, H.NO.3-6-184,
STREET NO 17, HIMAYATNAGAR HYDERABAD

CIRCULAR

Circular No. TGHCL/986/TDHs / Mason Training /NAC /2024 Dated 18-05-2025

Sub: INDIRAMMA INDLU- Construction of Demonstration Houses- Use of appropriate technology - not to attempt items which exceeds the permitted Unit Cost- Reg.

Ref: 1) Lr . no. TGHCL/986/TDHs / Mason Training /NAC / 2024, Dated. 09.12.2024 of

2) Memo No: TGHCL/986/TDHs / Mason Training / 2024 Dated. 29/03/2025 (Issued to all Project Directors, TGHCL)

Immediate attention is invited to the reference 2nd cited, wherein instructions were issued to adopt the most appropriate and affordable cost effective technologies in foundation, walling, and roofing for the construction of Demonstration Houses at Mandal Headquarters.

It is observed with concern that none of the Project Directors have initiated o tangible efforts to implement these technologies. Instead, construction is proceeding using conventional methods, which defeats the very purpose of C) showcasing innovative and resource efficient construction methods.

The purpose of constructing Demonstration Houses at Mandal Headquarters o is to clearly illustrate the feasibility of building an INDIRAMMA INDLU, a two room house with a separate kitchen and toilet within a plinth area of 400 sq.ft., and strictly within the approved unit cost of Rs. 5,00,0

Four alternate technical designs, offering Cost effective options in terms of time and expenditure, have already been communicated for adoption. These houses are to be constructed departmentally, without deviation from the C) approved unit cost.

C) Despite repeated instructions, it is a matter of serious concern that most Project Directors have not shown adequate interest in implementing these prescribed technologies. This reflects poorly on the seriousness and intent with which departmental directives are being followed.

It is once again reiterated that the Demonstration House is intended to serve C) as a model, clearly illustrating how a beneficiary can effectively plan and construct a 400 sq.ft. house within the allotted financial assistance of Rs. ,000/-, using the affordable cost effective technologies. .

In light of the above, the following directions are strictly issued for O immediate compliance:

C)

1. Rigorously implement the designated affordable cost effective technologies across all key construction components, particularly in foundati01@2 walling, roofing and_ joinery as per the prescri>ed

C)

guidelines.

2. Refrain from incorporating any additional design features or specifications that may inflate the cost beyond the sanctioned limit of

Rs. 5,00,000/-.

3. Ensure the Demonstration House is a practical and realistic model for beneficiaries to replicate, both in terms of cost and construction method010U.

4. Avoid any deviation from the prescribed norms, as this will mislead beneficiaries and compromise the core purpose of the demonstration. (3

All Project Directors are, therefore, directed to take immediate corrective action and ensure strict adherence to the above instructions without further delay.

To
All the Project Directors
In the State of Telangana

Sd/-18.05.2025
MANAGING DIRECTOR

(3

Copy to all the Project Directors for information & n/a.

// Attested //

Exe ecutive Engine nginee

C)

C)

O

GOVERNMENT OF TELANGANA

TRANSPORT, ROADS & BUILDINGS (RH&C.AI) DEPARTMENT

Memo No.3927/RH&C.A1/2025 Dated: 19-05-2025

Sub: T,R&B (Housing) Department - INDIRAMMA INDLU Scheme-
Formation of I.ndiramma Committees at Gram Panchayat / Muncipal Ward level and selection of beneficiaries under second phase - Instructions Issued.

Ref: 1.G.O,Ms.No.7, (RH&C.AI) Department, dt: 09.03.2024,
2.G.O.Ms,No.331 (RH&C.AI) Department,dt:11.10.2024.
3,MDt TGHCL, Hyderabad Circular cr. No. 1116/ TGHCL/EU?/ INDIRAMMA INDLW/20241 15.0412025.

-x-x-x-x-x-

The attention of atl the District Coliectors in the state is invited to the references cited above.

2, In the Government orders 2 0d cited it was directed to constrtute. Indiramma Committees at Gram Panchayat / Muncipal Ward level- fo.r effective implementation of the INDIRAMMA INDLU Scheme by 12.10.2024

C) However, it has come to the notice of the Government, that the Indiramma Committees have not yet been constituted in some Districts.

3. The Hon'ble Chief Minister during the Collectors Conference held on 14.04.2025, has instructed the Disfrict Collectors to go ahead with

INDIRAMMA INDLU Phase-Il sanctions @ 3500 per Assembly constituency t o duly reference deducting 3 rd cited,the pilot phase sanctions and instructions were issued in the

4. In view of the above, the Government here by issue further instructions for effective implementation of the INDIRAMMA LND'LU Sc.heme„

i) The formation of Indiramma Committee's at Gram Pan•c'hayat / Muncip•al Ward I.evel shall be completed by 25,05.2025/ if/ not already formed. District Collector shall pursue with the respectiVe

C) District in-charge Minjster, for pending issues if any and duly resolve those issues.

C) (i) Selection of beneficjaries, including verification, obtaining a.ppro.val of District in-charge Minister and issue of online sanction proceedings shall be expedited and the pro.cess completed by 31 .05.2025.

5. All the District Collectors in the state/ shan take jm.medi•ate action in the matter,

C)

6. This may be treated as Most Urgent.

L

K.•RAMAKRLS .R-AO

CHIEF SECRETARY TO GOVERNMENT To

O The All the MD, District TGHCL, Collectors Hyderabad.in the State.

Copy to:

C) PS to Minister (Housing).

PS to Chief Secretary to Govt.

PS to-Principal Secretary to CM, CMO.

PS to Secretary to Govt., Housing Dept.

PA to Spl.Secretary to Govt., Housing Dept.

// FORWARDED BY ORDER/ /

C)

C) ECTION OFFICE S dÉR

4499

TELANGANA HOUSING CORPORATION LTD. M.D. PESHI 26/5/25 HYD.

ANA

GOVERNMENT OF TELANGANA

ABSTRACT(

T,R&B (Housing) Department - Indiramma Indlu Scherne - Sanction of 877 houses under State Reserve Quota to Sland losers whose land was acquired/ as per Consent/Voluntary Acquisition Award in Kodanga(Assembly constituency in relaxation of eligibility criteria as mentioned In G.O,Ms.N0.7, T,R&B (RH&C.A1) Department/ dt:09.03.2024 - Orders Issued.

TRANSPORT, ROADS & BUILDINGS (RH&C.A1) DEPARTMENT

G.O.Rt.No.247 Dated:23.05.2025

Read:-

From the District Collector/ Vlkarabad, Lr.No.G/2486/024t dated'. 14.05.202 s.

ORDER: -

The District Collector/ Vikarabad in his letter read above has requested the Government to sanction 877 houses under Indiramma Indlu Scheme to the land losers as mentioned below whose land was acquired, as per Consent/Voluntary Acquisition Award in• Kodangal Assembly constituency in relaxation of eligibility criteria as mentioned in G.O.Ms.No.7, T,R&B (RH&C.A1) Department, dt:09.03.2024.

Sl.

C)

Sl. No	Village/Mandal	Name of the Project	Extent of the Land Published in PN/ Award Passed	No. of Land holders
1	Appaipally	Government Medical College in Kodangal	Ac.20-00 gts	18
2	Appaipally	College of Veterinary Sciences in Kodangal	Ac.35.00 gts	29
3	Polepally	Multipurpose Industrial Park	Ac.71-39 gts	37
4	Lagcherla (Assigned)	Multipurpose Industrial Park	Ac.110-32 gts	93
5	Lagcherla (Patta)	Multipurpose Industrial Park	Ac.497.00gts	287
6	Hakimpet (Assigned)	Multipurpose Industrial Park	Ac.351-10 gts	218
7	Hakimpet (Patta)	Multipurpose Industrial Park	Ac. 146-34 gts	115
			Total Landholders	797
			10% buffer to accommodate the death cases	80
			Total Sanctions needed	877

e)

C)

C)

2. After careful consideration of the matter, Government hereby accord Sanction for (877) houses under Indiramma Indlu Scheme under State Reserve Quota to the land losers as mentioned at para (1) above, as per Consent/Vo\untary Acquisition Award whose land was acquired/ in Kodangal Assembly constituency in relaxation of eligibility criteria as mentioned in G.O.Ms.No.7/ TIR&B (RH&C.AI) Department, dt:09.03.2024. 233

C)(P,T.O)

3 The Managing Director, Telangana Housing Corporation Limited) Hyderabad / the District Collector, Vikarabad shall take further necessary action in the matter,

(BY ORDER AND IN THE NAME OF THE GOVERNOR OF TELANGANA)

Dr. JYOTI BUDDHA PRAKASH

SECRETARY TO GOVERNMENT

To

/'fhe Managing Director,

Telangana Housing Corporatlon Limited, Hyderabad.

The District Collector, Vikarabad.

Copy to

The PS to Hon'bie Minister (Housing).

The PS to Chief Secretary to Govt.

The PS to Principal Secretary to CM (SR).

The PS to Secretary to CM (MR)

The PS to Secretary to Govt,t Housing Dept. The PA to Spl.Secretary to Govt., housing Dept. Sf/sc.

//FORWARDEI> BY ORDER/ /

SE t1JN OFFICER

C)

e)

(0

TELANGANA HOUSING CORPORATION LTD.,

HINO.3-6-184, STREET NO.17, HIMAYATNAGARr HYDERABAD-29

From

The Managing Director . The District Collector, TGHCL Vikarabad District.

RC.No. 1303/TGHCL/E&P/WGL/2025 Dt.30.05.202S

Sir, .

Sub. TGHCL-Indiramma Indlu- Sanction of 877 houses under State Reserve Quota (SRQ) to land (osers whose land was acquired as per Consent/VQluntary Acquisition Award in Kodangai Assembly Constituency -Orders communicated- Reg.

Ref: I.G.O Rt. No. 247, & B (RH &C.AI) Dept/Dt:23.0

Please find enclosed copy of the ref. cited, wherein the Government have accorded Sanction of 877 Indiramma Lndlu under State Reset-ve Quota to land losers whose land was acquired as per Consent/Voluntary

(3, Acquisition Award in Kodangal Assembly Constituency in relaxation of eligibility criteria as mentioned in G.O.Ms.No.7, T I R & (RH&C.AI) Department/ dt: 09,03.2024.

Therefore, the District Collector, Vikarabad, is requested to take further necessary action jn the matter,

C)

Encl: ref. cited.

C)

Yours faithfully

Sd/-30.05.2025

for Managing Director

Copy to the Project Director, Housing Vikarabad District.

//Attested//

Superintending ngineer

C)

C)

C)

File No.TGHCL-ENGG/SCHE/29/2024-ENGlNEERlNG SECTION

TELANGANA HOUSING CORPORATION Ltd

H. no. 3-8-184, Street No. 17 Urdugally Himayatnagar, Hyd-29

CIRCULAR INSTRUCTIONS

No: 7706/E&P/2BHK/2014, 24/05/2025

Sub: WSHP- 2BHK-Housing Programme- Completion of independent and G+ pattern houses through BLC mode
(7 without price Escalation -allotment of L 2 applicants- circular instructions - Regarding.

Ref: G.O.Ms.No 33, Transport, Roads and Buildings (RH &C.AI)
Department dt 22.03.2025

C)

Vide reference cited, it has been decided to alfot all the unallotted 2BHK houses (completed and in-progress houses) to the poorest of poor, who do not own house sites and hence could not be

CD covered under the Indiramma indlu scheme. L2 list (Eligible

Prajapalana applicants without house sites) prepared earlier may be used as a reference.

C)

C) 2. Preference shall be given to homeless/hut dwellers/ young

widows with children/ safai karamcharis/ disabled, etal. C)

3, Process adopted for the second phase Indiramma indlu beneficiary selection shall be adopted, including verification by Q) gazetted officer.

4. A separate module will be made available in Indiramma indlu portal for issuing allotment orders to these beneficiaries. Only online allotment orders shall be issued.

5. The District Collectors/ Commissioner GHMC are requested to look into the matter personally and take necessary action for handing over of

C)

C)

C)

GOVERNMENT

File No.TGHCL-ENGG/SCHE/29/2024-ENGlNEERlNG SECTION

-un-allotted-h.ouses tetheselected-el.igible beneficiar-i.es by 10%[h].-June 2025,

Director Of Municipal
Administration

To,
Commissioner GHMC.
AIE the District Coflectors in Tetangana State.
Copy to all the Project Directors (Housing) in Telangana State,
Copy to CGG, with a request to develop this module with similar workflows as that in Indiramma indlu sanctions.

C)

Signed by VP GAUTHAM
Date: 24-05-2025 13:33:57
Reason: Approved

OF TELANGANA

ABSTRACT

T (Housing) Department - Sanction of (22,016) additional houses .to PVTGs and STS in the IT DA areas under State Reserve Quota (SR'Q);, - SandVjon Accorded

- Orders - Issued.

TRANSPORT, ROADS & B.UILDINGS (RH&CeA1) DEPARTMENT

G.O.Rt.No.252

Dt:28.05.2025

Read:

From the M.D., TSHCL, Hyderabad, Lr.No.1116/E&P/ Indiramma Indiu/2023, Dr: 25 and 17.05.2025. 1.7.04.2025 and 17.05.2025.

ORDER:

In the .letter read above, the Managing Director, Telangana Housing Corporation Limitedl Hyderabad, has requested for sanction of (22,0.16:), Indiramma ind!u under State Reserve Quota (SRQ) •i.e. (8750) •addl. houses for STS in ITDA areas and (.13?266) houses for PVTGs under gatora.tioh mode, duly relaxing the oth'er eligible criteria mentioned in G.O.Ms.No.7, T/R&'B• (RH&C.A1) Department/ dt:09..03.2024 for PTGs to be identified as per PM JANMAN norms and öh'ly[e] the following two exclusion criteria are applicable for thetr Identlf(caflon i,e. (a) Household With pugca houses; and (b) Household •with •any member as a Government employee.

C)

C)

Q)

GOVERNMENT

C)

C)

No.	Constituency	No,of PVTGs	Addl. H.o.usés• proposed for STS in agency a rea	Total addl. Al focatlo•n
1	2	3	4	5
	Utnoor ITDA			
1	Bellam alli SC	223	o,	223
2	Adilabad	2848		3348
3	Boath ST	1637	500	'2137
4	Khana •u.r ST	2257	500	2757
5	Sir •urtJ.	227		22.7
6	ASifabad ST	3371	500	3871
7	Mancherial	117		1.1 Y
8	Asifabad	156	0	•156
	Total	10836	2öööö	12836
	Bhadr.achalam ITDA			
9	Aswarao eta ˡST		1000	1074
10.	Bhadr.achala•rn		i•öo.ö	11000
11	P.) nä aka	0	loöo	100.0
12	Yellandu		i 000	1000
13	W ra			7So
	Total	274	4 750	5024
	Eturna a ram ITDA			
	Mulu		1500	15m
15	Mahabubabad		250	250
16	Narsam et		250	250
	Toé,äi		iot)0	.2000'
	Munnanoor.ITDÄ Plain area			
	.Kölla _ur			105-
1B		7815		785
19	Acham et SC Kalwakurth	120		•1120
		583	0	583
.21	Vicarab.ad SC	63	0	63
22	Tandur	174		174.
23	Mahb.ubna ar	245		24.52
24	Devarakonda (ST) Nagarjuna Sagar	64		64
25.		17,	0	17
	Total	2J56•	o	
	GYä'nd •Total.	i3)66	'8750	22016

241

2. After careful (ji) 131266 houses fop PVTGs under saturation mode, du.ly relaying the other ellgible ctrikeria mentioned In G.O.MseNo.7, T,R&B (RH&C.A1) Department, dtt09v03, 2O24 for PV.TGs to be 'identified as per PM JANMAN norms and only the •following two exclusion criteria are applicable for 'thelr identjfiCatlon li:.e t .(,•)• Hmusehötd: with •p:ucca houses; ahd (.b) HouSehold w[th any member as a G.overnment .employee.

C

considepatlon of the matter, Government hereby accord Sanction fot 22,016 Ihddrärnma Indlu as above under State Reserve Quota (SRQ.) as follows:

(j). 8750 Addl. houses for STS the LTDA areas. And

3. The Managing Dlrector, Telanga.na Housing Corporation Limtted, Hyderabad shall 'take fUfthä necessary action in 'the matter,

(BY ORR AND IN THE NAME OF THE GOVERNOR OF TELANGANA)

Dr, JYOTI BUDDHA P-RAKASH.

SECRETARY TO GOVERNMENT

To

The Managing Director t

Te'lån̄gan:a :Hodsmg Cørpo;ration Limited,

Hyderabad.

Copy to

'The PS to. Hon*ble M (Housing).

The PS to. Phlnc ipäl Secretary to C.M.

•The PS •to .Secretäry ta G.overnment,

Tribal Welfare D.e,partment.

//FORWARDED BY ORDER//

C)

c

GOVERNMENT

SECTION OFFICER

C)

C)

C)

C)

OF TELANGANA

ABSTRACT

TIR&B (blousing) Department - Nomination of Project Officer, IT DA as nodal officer ror impiennenl•ation of Indiramma fndlu scheme for STS in ITDA/Agency areas _Permission Accorded - Orders - Issued.

TRANSPORT, ROADS & BUILDINGS (RH&C.AI) DEPARTMENT

G,O.Rt.No.253 Dt:2g.05a2025

From the M.D., TSHCL, idyderabad, Lr.No.1116/E&P/ Indiramma Ind{u/2023, DC: 19.03.2025.

ORDER:

Tn the letter read above, the Managing Director, Telangana Housing Corporation Limited, Hyderabad while stating that the Indiramma Indlu survey has been compieted in al! the Gram Panchayat.s in the state for implementation of Indiramma scheme and Cho state Governnnent is dovetailing with the Central Govt. Schernes such as PMAY-G, PM JANMAN and DA-JGIJA and has requested orders on the following:

i. Nominating Project Officer, ITDA as Nodal Officer, for implementation of all C) housing schemes with special focus PM JANMAN and DA-)GUA•., under the overail leadership of Collector.

C) Tribal Housing Project Monitoring l)niC consisting one Dy.Executive Engineer and one Assistant Engineer, TGHCL and one DEO to be estab(ished in ITDA,

C) to support' I:he PO, ITDA in *monitoring the housing schemes STS in IT DA a rea.

iii. The Project Officer, IT DA may provide office accommodation Co the TH-PMU

C)

(Tribal Housing Project Monitoring Unit) in the ITDA premises,

C)

2 . Government careful examination of the rnatter, hereby agree to• the above proposal and hereby ISSUe orders

a. Nominating Project Officer, I*I'DA as nodal officer for implementation of C) Indpramrna Indiu scheme for STS in ITDA/Agency areas with special fOCUS on

PM)ANMAN and DA-)GUAi under Che guidance of District Collector/Chairman, ITDA.

b. Establishment of Tribal Housing Project Monitoring Unit consisting one C) D)/. Executive Engineer and Assistant Engineer, TGHCI- and one DEO in ITDA to support the PO. ; T DA In monitoring the housing schemes for STS in IT DA area.

c. The Project Officer, ITDA Shali provide office accommodation to the TH-PMU (Tribal hioustng Project Monitoring Unit) in the IT DA premises.

C) 3, The Managing Director, Telangana Housing Corporation Limited, Hyderabad .shan take further necessary action in the matter.

(BY ORDER AND IN •rj„f E NAME THE GOVERNOR OF TELANGANA)

Dr. JYOTI BUDDHA PRAI<ASH
SECRETARY TO GOVERNMENT

The Managing Director,
Teiangana J-tousing Corporation L.imited, . I-!yderabad.

Coto

C) The ps to M (I-lousing).

The PS to Principal Secretary co C.M. The PS to Secretary to Government, Tribal Welfare Department.

C) // FORWARDED • BY ORDER/ /

SECTION OFFICER

OFFICER

GOVERNMENT

Lvsl+k

OF TELANGANA

TRANSPORT, ROADS & BUILDINGS (RH&CÜAI) DEPARTMENT

Memo.No.3626/RH&C.A1/2025 dt:28.05.2025

(7 Sub: T,R&B (Housing) Department Minqtes of Video Conference held by Hon'ble Chief Ministerwfth District Collectors, on dt.27.5.2025 regarding 'Indiramma Indiu Scheme" - Reg. C)

Ref: Minutes of Video Conference held by hlon!ble Chief MinisterwithDistrict Collectors, on db 27,0512025,

It is informed that the Hon'ble Chief Minister held a Video Conference with District Collectors, on dt,27.05.2025 regarding "Indiramma Indlu'/ Scheme and a copy of the minutes is enclosed herewith.

C) 2. Therefore, alt the District Collectors in the State and the Managing

C) Director, Tetangana Housing Corporation Limited! Hyderabad are requested to talce further necessary action in the matter,

K, RAMAKRISHNA RAO

CHIEF SECRETARY TO GOVERNMENT

To

All the District Collectors.(w.e.)

/The Managing Director,

Telangana Housing Corporation Limited,

C) Hyderabad(w.e.)

TELANGANA HOUSING CORPORATION LTD. M.D. PESHI 30/5/25 HYD-29.

Copy to

The PS to Hon'ble Minister(Housing)(w.e,)

o The OSD to C.S.(w.e.) i The PS to Principal Secretary to C.M(SRC)

// FORWARDED BY ORDER/ /

C)

SE CTION OFFICER

C)

GOVERNMENT

SE (P) 3/15

EBR 3/15

C)

C)

C)

Minutes of the Video Conference held by Hon'ble Chief Minister with District Collectors, on Dt.27u05n2025.

Housing (Indiramma Indlu Scheme)

- Formation of District level price monitoring committees with relevant officers of the Departments and SHG group members, to avoid unnecessary hiking. of mason charges, local materials til<e 20 MM/40 MM stone metal/ etc.

- Timely supply of free sand coupons by involving Tahsildars, MPDOsj AE (Housing).

- Arranging loans to SIHG group through MEPMA/SERP for installing bricl< production units, centring units/ etc., under Indira Mahila Shakti scheme/ Rajiv Yuva Vikasam scheme, etc,r to ensure adequate material availability.

- Ensure timely capture of houses progress on Indiramma Indlu App by GP secretary, without delay.

- Adoption of affordable construction technologies tike open foundation, short columns (pillars up to basement level) f filler roofing, etc., by creating awareness to •beneficiaries and masons.

- Exposure visits of beneficiaries/masons/Indiramma committees to Model indiramma houses at nnandal headquarters. Fixing flexis/banners regarding noode(house/ model estinnates at market place, GP / mandal offices.

C) Adequate and appropriate publicity of Indiramma Indlu housing programmer capturing beneficiary videos, ongoing houses construction; model houses,. by posting on social media r pr.int• and electronic media.

- Collector to tal<e up visits to on-going Indiramma Indlu, C) interaction with beneficiaries one-on-one and as groups, creating awareness about above and obtaining feedback from beneficlaries. C)

K.RAMAKRISHNA RAO

CHIEF SECRETARY TO GOVERNMENT

C)

From

The Managing Director

TGHCL

To

The District Collector,

Adiiabad/Bhadradri l<othagudem/ Khammam
Kumuram Bheem Asifabad/Mahabubabad/ Mahabubnagar/Mancherial/ Nagarkurnool/ Nalgonda/Nirmal/ Rangareddy/Vjkarabad/ Warangal District

(7

TELANGANA HOUSING CORPORATION LTD.,
H.NO.3-6-184, STREET NO.17, HIMAYATNAGAR, HYDERABAD-29

Lr No: 1116/E&P/1NDIRAMMA INDLU/2023f Dt:31.05.2025

Sir I

Sub : - TGHCL-Sanctjon of (22016) additional houses to PVTGs and STS in the IT DA areas under State Reserve Quota (SRQ)-Orders Communicated- Reg.

Ref:- I .G.O Rt. No. 252 , & B (RH &C.AI) Dept, Dt:28.05.2025.

Please find enclosed copy of the ref. cited, wherein the Government have accorded Sanction of (22,016) indiramma Indlu under State Reserve Quota (SRQ) C) as follows:

C) iii) 8750 Adcfl. Houses for STS in the IT DA areas and

iv) 13,266 houses for PVTGs under saturation mode, duly relaxing the other eligible criteria mentioned in G.O,Ms, No. 7 f T, R&B (RH&C.AI) Department/ C) dated: 09.03.2024 for PVTGs to be identified as per PM JANMAN norms and only the following two exclusion criteria are applicable for their identjfjcation C)

i.e. f (a) Household with pucca houses and (b) Household with any member as a Government employee.

Therefore, the District Collector concerned is requested to tal<e further necessary action in the matter.

End: ref. cited.

Yours faithfully

C)

Sd/- 31/05.2025 for
Managing Director

Copy to the Project Director, (Housing) , Adiiabad/ Bhadradrj Kothagudem,

O)

Khammam, Kumuram Bheem Asifabad, Mahabubabad/ Mahabubnagar,

C) Mancherial) Nagarkurnooi, Nalgonda, Nirmal, Rangareddy, Vikarabad/ Warangal for information and necessary action.

Copy to the Project Officer, IT DA Jtnoor,Bhadrachalam,Eturunagaram and Munnanoor for informatjon.

C) //Attested//

C)

ted//

Superintending Engineer

C)

GOVERNMENT OF TELANGANA ABSTRACT

, (Housing) Departrnent - Sanction of (22,016) additional houses to PVTGs and STS in the IT DA areas under State Reserve Quota (SRQ)I Sanction Accorded . Orders - issued.

TRANSPORT, ROADS.& BUILDINGS (RH&C.AI) DEPARTMENT

G.O.Rt.No.252 Dt:28.05.2Q25

From the M.D., TSHCL/ I-{yderabad/ Lr.No. 1 116/E&P/

Indiramma Indlu/2D23, Dt: 17.04.202S and 17.05.2025.

ORDER:

In the letter read above, the Managing Director/ Telangana Housing Corporation Limited/ Hyderabad/ has Fequesged for sanction of (22,016) Indiramrna Indiu under Stat Reserve Quota (SRQ) (8750) addit houses for STS in ITDA areas and (131266) houses for PVTGs unde saturation mode, duty relaxing the other eligible criteria mentioned in G.O.Ms.No,7, T/R&B (RH&C,AI) Department, dt:09.03.2024 for PVTGs to be identified as per PM JANMAN norms and only the fo\lowin two exclusion criteria are applicable for their identification i.e. (a) Household With pucca houses; and (b) Household with any member as a Government employee.

No.		No.of PVTGs	Addle Houses proposed for STS jn agency area	Totai addl. Allocation
1				5
1		3		
2				
3	Constituency	22:	4	
4		223		
5	2	284C		
6		1637		223
7	Bellampalli(SC)	2257	0	3348
8	Adilabad		500	2137
	Boath(ST)			2757
	Khanapur(ST)	227	~~500~~ 500	
	Sirpuru		0	~~227~~ 3871
	Asifabad(ST)			
	Utnoor ITDA	3.371	500	117
		117	0	156
	Mancherial	117	~~2000~~ 2000	12836
	Nirmal	156		
	Total	10836		
				1274
		274	1000, 1000	~~1000~~ 1000

C)

C)

C)

C)

	Bhadrachalam ITDA	0	1000	1000
9	Aswaraopeta(ST)	0	1000	1000
10	Bhadrachalam	0		750
11	Pinapaka	0	750	5024
12	Yellandu	2 74	4 7 50	
13	Wyra			
	Total		1500	
	Eturnagaram ITDA		250	1 soo
14	Mulugu	0	250	
15	Mahabubabad	0	2000	250
16	Narsampet	0		250
	Total	0		2000
17	Kollapur		0	105
18	Achampet(SC)	105	0	785
19	Kalwakurthy		0	120
20	Pargi	120	0	
21	Vicarabad(SC)	785		583
22	Tandur	120		63
23	Mahbubnagar		0	
24	Devarakonda(ST)	583	0	
25	NagarjunaSagar		0	174
	Munnanoor IT DA & Plain area	174		245
	Total	63	0	64
		245	0	
		64		
		17		17
		2156	0	2156
			8750	
	Grand total	13266		22016

C)

2 . After Careful consideration of the matter, Goverhrnent hereby accord Sanction for 22,616 Ihditamma Indiu as. äböve under State (Regehve QuÖta (SRQ) as follows:

3 . Thé Månaging Director, Telangana. Housing Corporation Limited, Hyderabad shell take further necessary action in the matter,

C)

C)

(BY ORDER AND IN THE NAME OF THE GOVERNOR OF TELANGANA)

Dr, JYOTI BUDDHA PRAKASH

SECRETARY TO GOVERNMENT to

C)

The Managing Director,

Tefangana Housing Corporation Limited,

C)

(i) B75Ö Addl. houses for STS in the ITDÄ areas. And

(Ii) 13,266 houses for PVTGs under saturation mode, duly relaxing the other eligible criteria mentioned in G.O.M5.No.7, T *R&B (RH&C.A).) Department, dt:09.03.2024 for PVTGs to be identified as per PM)ANMAN norrns and only the following two exclusion criteria are applicable for their. identification i.e (a) Household with pucca houses; and (b) Household with any member as a Government empioyéé.

H ydera bad.

The PS to Hon 'ble M (Housing),
The PS to Principal Secretary tÖ C.M. The PS to Secretary to Government,
Tribal Welfare Departrnent.

//FORWARöED : : BY ORDER/ j

SECTION OFFICER

TELANGANA HOUSING CORPORATION LIMITED,
H,NO.3-6-184, STREET NO, 17, HIMAYATNAGAR, HYDERABAD-

From
Managing Director
TGHCL

All The Dlstrict Collectorsr

RC,No. TGHCL/E&P/Transqenders/2025 Dt: 02.06.2025

Sir,

Sub TGHCL- Indiramma Indlu -Sanction of Houses to Transgenders -Reg.
Reft,- Note orders of Manäglng Director, TGHCL Dt.31.0S,2025

-000-

It is to inform that/ the Hon'bl.e Chlef Minister had d[rected to prioritize to sanction of houses to the transgenders under the Indiramma Indlu scheme.

In this regard it is to inform that, the Distr!ct Collector have sanctloned certain houses to the transgenders in the districts (Statement C) enclosed).

O Therefore, the District Collector of concerned district are requested
C) to conduct an interaction with Transgenders and obtain the willingness to construct Indiramma lhdlu and submit a proposal based on the same.

O Encl: As Above

Yours 'faithfulty
Sd/- 02.06.2025 for Managing Director

C) Copy to all the Project Directors (Housing),
Copy to the Commissioner, Women a'nd Child Welfare Department/
C) Copy to the Secretary to Govt. Women and Child Welfare Department,
Copy submitted to the Secretary to Gövt, T, R&B {Housing) Dep.artment
C) Copy to the Dlstrlct Women Welfare officers/PD,ICDs

C)

//Attested// ed//

C)

Superintending ngineer

g Engineer

C)

e)

253

C)

District wise Status of houses sanctioned to C)

No	District	Proposals Submitted by the MPDOs	Houses Sanctioned by the District Collectors
		3	4
Total		110	79
•1	Adilabad	1	1
2	Bhadradri Kothagudem	5	4
3	Hanumakonda	3	1
4	Ja itia}	3	2
5	Jangoan	1	1
6	ja ashankar Bhu ala all	3	1
7	Jogulamba Gadwal	4	1
8	Kamaredd	7	7
9	Karimna ar	4	2
10	Khammam	1	1
11	Kumuram Bheem Asifabad	4	0
12	Mahabubabad	1	1
13	Mahabubnagar	4	3
14	Mancherial	7	c;

		2	2
16	Medcha•l •j ri		1
17	Mulugu	1	
18'	NagarkurnooJ	3	1
19	Nalgondö	10	8
	Nara an el	4	3
21	..Nfrm åj.	2	1
22	Nizamabad	11	il
23	PeddapallJ	2	2
24	Ra •anna Strcilla	3	3
25	Ran aredd	1	1
	Sangaredd	2	2
	Siddf et	2	1
28	Sur, ä ét	2	1
29	,Vtkarabad	4	1
30	watha O äKth	3	3
31	Waran al}	6	5
32	YadädFi!Bhuvanagjrt:	3	3

Transgenders

C)

C)

C)

C)

C)

32 | Yadadri Bhuvanagiri

c

C

C)

Otfdetbs -- Issued/

TRANSPORTI ROADS &

G. O. Rt.No. 259

In •the G.C), 1St •read above, Governrnen•.t commenced- the •
Housing 'Schehne fÖr CohStructio,n houses W/th fl•nancia'il assistance of 'Rse.5.OC) lakh,s eligibility criteria vide G.O. Ms.. N.o.7, dt:09.D3.20 24 from out of the Pl.-ajapalana

read above, the Ma nag•lng DirectO%.
Housing Corporation L)mited) Hyderabad, while stating that
I•ndlu Scherne is being Implemented in. the by the
Collector & Executive Director through the YIC$,
Hence Che rofe of Patnchayath Secretary/ Wad
DEE (H); C.omrllissioner, PD(H), District
f.o be c.omnnunicatecl IT) 1-.1%-) ifieic) iri Execution and paynnent systen.h• of' rnrna Il') cllu; thal scherne is ITIoniCorecf through online portal https://indirarnmaindlu celangana.qöv.il'); paynnents will also nnaqJe through the online systern of the portal; he has subnnitted proposaß with roles & duties of officers invo!ved in execution of Inclir,amma: programnne and In release of payrnertts 10 beneficiaries and' req.ue.steW%t4

ISSUC? suitable orc-jers

Gove.c,anne-unt after cu of the. matter hereby issue: orders defining the (•oilowinq roles and dillies of officers in executio;n of Indiramma Jndlu programme and in release of payments to beneficiat/es-

Benefic(ar.V Led Construetlon ('BLC). Rural

Ro\e Designation Duties to be pefför•hled

v

l. Tinnely capture .01' Geo T egged phötoe each 5ta.gé of construction

G Faro
Secr.etar:.y
'OTfJCeF

of,'Sgheme

4. C.ol•lé.él'lon

•100%
beri•etlåårYü

944.

ASsiståi7t Ei$Jhéér
Ctleck•er (Aousing.)- cmsttüctlo•n Cechindlögl€s.
VennctYMon Off

IOC) .cÎesk, verificauotîąf and

ţłrnćnding next and

Complątłan 'to Che •Cjlšttrct.C0flecfror for prąymenĹr dŁ•fly doiną•

ëŕf y'

R e. i e-asE.p-aSîrnentšjtbšb²ĆŕÎef4dłary^Ŕ throug,b Ąaďłåaăr frăytrreăt S.ysĘefiq• (A-ŔBŠ)

ŢGHCL

Managing Director,

(DB-Î) tion .af•ProjeŕŁ Director Oistrlčt .Côl•lect-or.

Municipal Commissioner !

Păymełıl: • ',vłanda! ,beryeficiărlQS at staae.

5¹%' bo'št--•facto physical verificatian óf• stage of rancţornly sclect.ed by the

2% post-facto physicaţ of stage of ţ bën eficła riešrandôlnlylsëlëăetžed.• by Łfre 61Yştem

Vigilaru•e Officer-

The Man agi ng Director, ng n 1-101-łsinq Corporation Limited, ,'Hy.derabacl ancl Districť Colţe.ł;tors/Execullive Director, Ho.usin•g Corporation furt:her ne.cešsb•ţ.yăction in the .matter.

(BY ORD EŔ

The Managjng. (Dliîëcbor

Depl..
P;lanning D-ept,

'ethmenl-, g..vôfiia:ment,

//FORWARDED BY ORDE.R//

TELANGANA HOUSING CORPORATION LIMITED,
H.NO.3-6-184, STREET NO. 17, HIMAYATNAGAR, HYDERABAD-29

.rom

P. Gautharn, IAS.,
&Idnaging Director

All the District Collectors,
in the State/

L r.No.1116/ TGHCL/E&P/INDIRAMMA INDLU/2024,Dt:08.06.2025

Sub TGHCL- Indiramma Indlu -houses sanctioned from 1-3 to LI applicants - Thorough verification before grounding of housesinstructions - issued - Reg

Ref: 1. GO. Ms. No, 7, TRANSPORT(ROADS & BUILDINGS (RH&C.A1) DEPARTMENT/ dt.09,03.2024

2. List of applications sanctioned from L 3 to L I applicants,

Kind attention is invited to the subject and reference 2 nd cited.

o On observation of sanctions under Indiramma Indlu in villages (it is noticed that 12716 houses are sanctioned to the L 3 applicants out of 2.45 lakh houses sanctioned, The district wise details are as mention below:

C)

C)

C)

C)

C)

C)

Sl. No.	Name of the District	No.of Houses Sanctloned from 13
1	Nizamabad	1732
2	Nalgonda	14 4 3
3	Nagarkurnool	1216
4	Rangareddy	•1160
5	Khammam	1072
6	Yadadri Bhuvanagirj	1033
7	Mahabubnagar	782
8	Karnareddy	675
9	Wanaparthy	643
10	Jagitial	
11	Rajanna Sircilla	465 •418
12	Medak	343
13	Jangoan	334
14	Narayanpet	282
15	Bhadradri Kothagudem	231
16	Mancherial•	201
17	Karimna ar	191
18	Siddipet	169
19	Medchal Malkajigi(i	136
20	Adilabad	86
21	Sangareddy	56
22	Hanumakonda	35
23	Mahabubabad	9
24	Mulugu	4
	Total	12716.

257

PI T, o

C)

_____ice that l}ouses are sanctioned to a few . C)

eligible beneficiaries,

O

Therefore, the District Collectors are requested to instrutct: MPDOs/MCs concerned for thorough re-verification, before grounding of the houses sanctioned for the applications rnöved¯from L3 to Cl . If found in..eligible C) at any. stage} it is directed to cancel the said sanctions, Also, action may be initiated against the officers involved in selection of such ineligible C) beneficiaries.

Action taken on the above may be reported to the TGHCL.

C)

Enclosure: List of L 3 to Ll bens, Yours faithfully C)

Sci/- 08.06,2025

Managing Director

CD

sted//

//Attested//

Superintending Engineer O

C)

TEC ANGANA HOUSING'CORPORATIQN LIMITEP(

H,NO.3-6-184/ STREET Noh 7, HIMAYATNAGAR, HYDERABAD'-29

From

Managing Director

TGHCL

To

The District Collector,

Dlstrict.

RC.No. TGHCL/E&P/Transgenders/2025, Dt: 14.06.2025

C) Sub TGHCL- Indiramma Indlu -Sanction of Houses to Transgenders - Reg.

-600-

It is to inform that/ the Hon/ble Chief Minister had directed to prioritize to sanction of houses to the transgenders under the Indjramma Indlu scheme,

In this regard it is to inform that/ there are 7,077 transgender applied

C) for sanction of house during Praja Palana. District-wise total Transgenders Regist

Surveyed under I-I/ L 21. and L 3 details are as follows:

Sl No,	District	Total transge nder registe red	Transqpnd er u nd:er (L1)	T range nder under (L2)	Transge nder under (L3)	MPPO appréyed	mstrict Coflector Approved
1	2	3	4	5	6	7	8
	Adilabad	129	63	22		5	5
	Bhadradr(Kothagudem	215	70	43	101.	14	
	GHMC	1 CO 97	10	eso	131	0	14
2		171	16	41	78	5	0
3 A	Hanumakonda		52				3
5	)a itial		57	39	44	4	4
6	)an oan	103	29	21	53	3	2
	)ayashankar Bhupalapally	146	76	19	51	5	3
7	Jogulamba Gadwal	145	55	18	72	7	2
8 9	KamareddL Karimna ar	185	76	39	70	12	12
10		172		31	67	9	6
1	Khammam	325	68	75	182	S	3
1	Kumuram Asifabad	148	80	16	52	5	0
12 13	Mahabubabad	183	66	28	89	4	3
14	Mahabubna ar	156		16	89 79	6	
15							
16	Mancherial	162 114	88 43	3314	41 4.1 57	12 4	12 4
	Medak Medch•al.	122		72	43		1 3
17	Måtkäilqlri	.94	41		46		7
18	Mulu ü						17
19	Nagarkurnool	182			116	9	6
2Ö			54	(2		23	7
	Narayanpet	456	158	75	223	8	6
21	„.lY&Äonda		46		76	7	17
22		136		14	76		
	N.irmal	150	59	27	64		
23	Nizamäbad	270	76	83	111	17	
24	Peddapä!li	156		45	54	6	

	Raja						5
25	S rclj	96	42		27		5
26		304	61		157		9
21		251	61	69			8
		220	86	86	96		2
	Rangareddy			69		5	
	Sangareddy			44		9	
	Siddlpet		83	40	93	11	
29	Sur a ,et	273	82		151		
30	V.il<arabad	222	96	49	76		
31		9.ä	37		55	9	
	WA@Lqai					5	9
32	Yadädri			73	111	14	5
	Bhuvahacfl'i	2é8	104				11
33	T Ota I	168	51	32	85		
			2114			4	4
		7077		2166	2795	2 41	201

urtherthe Districtwise iist of Transgender appiicants under L 1, L 2 & L 3 are attached to the Concerned District Collector for informatiom.

Therefo.re, the DistriCt Collector of concerned diStrict are requested 'to conduct an interaction Transgender under Ll & L 2 categories and obtain the willingness to construct Indirarnma indlu and submit a proposa l based the same.

encl: A.s Above

Yours faithfully

Sd/- 14.06.2025

Managing Director

Copy to alt the Project Directors (Housing)/

›py to the Cotmmissioner, Women and Child Welfare Department,

CÖpy• to the Secretary to Govtl Women and Child Welfare Department,

Copy submitted to the Secretary to Govt. Tt R&B (Hoüsing)

Cor

artment Copy to alt the //Attested/// District Women Welfare offiCers/PD,ICDs

Superintending Engineer

TELANGANA HOUSING CORPORATION LTD.,

H.NO,3-6-184, STREET NO.17, HIMAYATNAGAR, HYDERABAD-29

From
The Managing Director
TGHCL

To
The Project Officer, ITDA.,
Utnoor/ Bhadrachalam/
Eturunagaram/Munnanoor,

L r No: 1116/E&P/1NDIRAMMA INDLU/2023r Dt,15.06.2025

Slr,

Sub .- TGHCL-Sanction of (22016) additional houses to PVTGs and STS in the IT DA areas under State Reserve Quota (SRQ)Orders Communicated- Reg.

Ref • 1, GO Ms,No.7, (RH&C.AI) Dept.,. No.7, Dt.09.03.2024 of T,R&B Memo.No.582/Genl.,L&C/2025, Chief Secretary to Govt.. ecretary to Govt.

2. Govt., Db. 18.01.2025 from

3, T/o Circular No. 1116/TGHCL/1NDIRAMMA INDLU/2024, Dt.15.04.2025

4 G.O Rt. No. 252, T/R &B (RH Dept., Dt:28.05.2025 C) S. G.o Rt. No. 253, T, R &B (RH &C.AI) Dept.,Dt:28.05.2025

Please find enclosed copy of refs. Cited.

Vide ref. 4th Cited the Government have Sanctioned (22,016) Indiramma Indlu to STS under State Reserve Quota (SRQ) as follows:

i) 8750 Addl. Houses for STS in the IT DA areas, and
•ti) 13,266 houses for PVTGs under saturation mode.

Also, vide ref. 5 th cited, the Govt., have Nominated the Project Officer, o IT DA as Nodal Officer for implementation of housing Schemes Indiramma Indlu Scheme for STS in IT DA / Agency areas with special focus on PM JANMAN and O DA-JGUA, under the guidance of District Collector/ Chairman, IT DA.

Accordingly, the following guidelines are issued in Selection of Beneficiaries & Sanction of Houses:

C)

1 . The additional houses sanctioned above are in in addition to the 3500 houses already sanctioned per Assembly Constituency.

2, These additional houses are to be sanctioned to STS in the Scheduled villages of Agency areas as per the same eligibility conditions specified C) in G O MS No. 7 dt. 09-03-2024 of Dept., at a Unit Cost of Rs. ,000/- per house. J)

3 Allocation of these houses among the viilagesün the Constituency will be finalized in consultation with the public representativesr in proportion to the ST population or no. of eligible Praja Palana ST applicants having Own sites (L 1).

4. Care should be taken to ensure that the most vulnerable segments like homeless, hut-dwellers, transgender, disabled, widows with minor children, etc. are included.

However, houses to the PVTGs be sanctioned jn saturation mode, duly relaxing the other eligibility criteria mentioned in G.O MS No. 7 T ,R& B (RH&C.AI) Department, dt, 09-03-2024 for PVTGs to be identified as per PM-JANMAN norms and surveyed through PM-JANMAI\I App with only two exclusion criteria (a) Household with pucca houses, and (b) Household with any member as a Government employee.

5. Selection of beneficiaries, verification by Gazetted Officers, desktop/ Re-verification of Red flag Applicants, online sanction of houses etc., shall be done as per the guidelines contained in the ref, 3 rd cited above

The MPDO on saturation •of the eligibility shall forward eligible beneficiaries proposed for sanction on the Indiramma portal to the District Collector/ Chairman IT DA through the PO/ IT DA. Necessary logins are being provided to the PO, ITDAs for processing sanction and monitoring the program.

6. The GOI in the Minutes of the meeting held on 16 th May 2025 has issued instructions for completion of houses sanctioned to PVTGs in a time bound manner by September, 2025. As such the PO. , IT DAs shall make necessary arrangements to organise men and material for completing the houses in a Mission Mode under Beneficiary Led Construction (BCC) mode,

Yours Faithfully,

Sci /-15/06/2025

Managing Director

Copy to the District Collector, Adjlabadl Bhadradri Kothagudem, Khammam, Kumuram Bheem Asifabad/ Mahabubabad/ Mahabubnagar, Mancherial, Nagarkurnool, Naigonda, Nirmal/ Rangareddy, Vikarabad, Waranga[for

nformation and necessary action,

to the Project Director(Housing), Adilabad/ Bhadradrj Kothagudemt ımarn, K muram Bheem Asifabad/ Mahabubabad, Mahabubnagar, :herial, Nagar€urnool/ Nalgonda, Nirmal, Rangareddy, Vikarabad, Warangal for information and necessary action,

Copy to CGG for necessary action,

//Attested/(

Exec cutive Engineer

1013/2/2023-RH-Pol.

Government of India

J. (eFMS:386669)

Mlnis(cy of Rural Development
Department o! Rural Dovolopnhont (Rural Housing Division)

IQ•ishi Now Dolhl

Daled dune 2025

The Addiüonal Chief Secretary/ Prlnclpal Socrotury/ Secretaryl
Department of Rural Developmenls
Slate Governmenls 01 Andhca Pradesh, Chhallisoarhs Guiacal, Jharkhand, Karnataka, Kerala Madhya Pradeshs Maharashtra, Odisha, iRajaslhan, Tandl Nadu, Tripura, Ullar Pradeshs Bihar, Mahipur. Telanoana and Utlarakhand

Sublect: Remand Module {or deletlnq lhe Ineliglble households undöl' the PM JANMAN-reg

Madarn/Sirs

As your are aware PM. JANNiiAN has been launched by tvlinls(ry of •tribal Adairs (o address critical gaps in the well•being 01 Particularly Vulnerable Tribal Groups (PVTGs) across lhe nation, Il airns 10 itnplernenl M pivolal inlervenlions spanning 9 key Ministries including this Ministry 3 years (rom FY 2023•24 10 2025-26. The provision ol pucca house lo the PVTG households is one 01 the interventions under the PM JANtviAN which is being implemented by this tv}inisUy through PMAY•G.

2. Further. lhe A\vaas+ Moblle appl$ca(lon 2018 01 PMAY,G was also updated (or conduct of survey and registration of eligible households {oc oranl of assistance under PM JANMAN. As on June 5i49,879 have boen identified as eligible based on lhe 2 exclusion criteria own Pucca House and Govt Job after {he survey using Awaas+ 2018 [nodule.

3. However, tor further (illraliont is in(ormed Iha(with lhe approval o! (ha competent authorilyt lhe Remand Module for PM JANMAN has been created in the AwaasSoft with the lollowing criteria and nnade live lhe use 01 (he stalos•

Remand Code	Remand Criteria
1	Household with a Pucca house
2	Household with any member as a Govt. employee
3	Households which already have a pucca house or have constructed a pucca house in this duration
4	Households which have already got benefit under Central/State rural housing scheme
5	Households permanently migrated
6	Death of Head of Household with No legal heir
7	Unwilling households
8	Switch from rural area to urban area/planning area.

2. Therefore, the •3í'dfC::, hercby requeslcd delete Iho jnciigibie Jencíicj3('JC6 undor PM IJôing Iho reĺnand rnodule,

Yours íaiíhĺuliy,

(Ashish Shinde) Joint Director (BH)

Email: ashish.shinde86@gov.in

CDP'/ lo:

i,T Dircc!or, PVT G Ministry of Tribal Affairě: Delhi

ii, The Filc,MoRD

Íii, PS lo DDG(RH), M0Rí)

(vilNUTES OF THE MEETING HELD ON MAY 2025 AT 11 :00 AM TO REVIEW
HE PROGRESS OF PM JANMAN UNDER THE CHAIRMANSHIP OF SECRETARY, DEVELOPMENT

A review meeting on the progress of PM-JANMAN was held under the chairmanship of Shri Shailesh Kumar Singh, Secretary, Department of Rural Development, Govt of India on 16th May 2025 at 11 :00 AM through Video
'Conference with the Additional Chief Secretary/Principal Secretary/Secretary from ne Stales implementing the housing intervention under PM-JANMAN.

2. At (he outsets the Secretary welcomed all participants of the states, delivered nis opening remarks and highlighted the following points.'

i. As on date, under PM-JANMANJ against the cumulative target of 4.77 .1akh houses, 4.47 lakh houses have been sanctioned, and 1 .15 •lakh houses have been completed.

ii. All States were requested to complete the survey for identification of eligible PVTG households and sanction of houses by 31st May 2025. The portal for survey and sanction of houses shall be closed with effect from I sl June 2025 .ili. The Secretary expressed satisfaction that •the scheme is now also being implemented jn Bihar, Manipur, and Telangana, Notably, Manipur has sanctioned 1 ,781 houses under the scheme. These States •are also requested to ensure timely completion of the survey and sanction of houses through the Awaas+ application within the prescribed timeline of 31st May

C) 2025.

iv. It was (urther emphasized that the timeline for compie_t'on of all houses is 30th Se (ember 2025) which necessitates a construction pace houses per ay—a sfgnificant increase from the current pace or 210 houses per day. All States are requested to strictly adhere to this timeline and ensure convlelion of all pending houses,

v. It was also informed that there is no paucity of funds under PM-JANMAN. For the current financial year 2025-26} an ämoünt of crore has been earmarked for the scheme. States are therefore utilization of funds and submit complete proposals to this Ministry to facilitate . thF-TéTäääöéØf funds.

C) J Thereafter, Shri Gaya Prasad, Deputy Director General, Rural Housing, Ministry or Ruraj Development, presented the progress of the States, focusing on the O following agenda points.

i. Status of survey using Awaas+ 2018 mobile app undeæP-M JANMAN

ii. Cumulalive Physical Progress of the States (Sanctioning and completion of C) Houses) ili Status 01 Funds released to the States

iv. Laßdless By.ficjaries under PMJANMAN

v. Other Issues related to the implementation of the PM JANMAN in the states

4. /After the presentation of the status, the States were •requested to share their "nnmenls, and the following points were discussed and decided:

C)

C)

C)

Sr. No,	State	Comments provided by the States
	Madhya Pradesh	The State informed that I o-ut of the cumulative target of 4,460 houses are yet houses, only sanctioned, to be houses are pending cotnpletion.i and i 120,526
		l.(VVäb f e;rationalization instalment structure from four to three installments.
2	Odisha	The State informed that they have almost completed the survey to identify the eligible beneficiaries. ii. It was informed that out of the total eligible beneficiaries of 501990 households, around 5,000 were found ineligiblei which need to be removed from the current target. Thereföres as per the updated data, the actual sanction gap of the houses is 12%, which wilt be addressed by the end of May, and the pending houses will be completed by the end of September. The State was requested to communicate the same to this Ministry. iii. The State was requested to ensure rationalization of instalment structure from four to three instal!rnents. The State informe¯d that out of the cumulative target
3	Kerala	1,814 houses, 675 have been sanctioned and the remaining 1 ,1 39 houses wili be sanctioned by the end of May. 'l i e It was also informed that the State has 1 1 7 landless beneficiaries, which is causing a delay in the tjtmeiy completion of houses. iii. The State has taken up the issue of F TO generation with the NIC tearn and tho PFMS team, which will be resolved shortly for the timely disbursement of funds to the beneficiaries. A separate budget line for PM-JANMAN is also in process.
4	Manipur	The State ensured that they would complete the sanctioning of houses by the end of May The State also informed that they have sent a proposal tol open a separate account for PM JANMAN
5	Bihar	The State informed that as per the instructions fr-om¯tfie Ministry, they have initiated the survey and identified 1 i308 eligible families, However, the number of eligible families may increase as more have been identified, The ate also requested an extension of the timeline as PVTG amilies have been identified in forest land, which might take longer. iii. The State was requested to onsider utilization of PMAYG for PM JANMAN beneficiaries for 1 ,308 identified eEigible

6	Telangana		The State informed that they have already identified PVTG households through their survey and requested the integration of their data to the central MiS.	C)

O

C)

C)

C)

C)

O

	ii. It was also informed that 200 more villages are to be mapped and require assistance from the NIC team for the m
'Tamil Nadu	The State informed that they have flagged (99 houses that were wrongly entered in the system ii. They informed about conducting fortnightly meetings to monitor the progress and ensure that timelines are adhered to.
Chhattisgarh	The State informed about "remanding 2,341 households from the target, which has been communicated to. the Ministry. Of Ithis, •806 houséh•olds are in the forest area. They will address the of landless beneficiaries and take necessary steps
IMaharashtra	The State informed that they have sanctioned 92% of the houses, and around 2,200 beneficiaries are land!ess, causing a delay in the process.
i Karnataka	The State informed that, since the Government 01 Karnataka provides higher unit assistance for PVTG beneficiaries compared to the support under PM-JANMAN many beneficiaries under the central scheme are discontinuing construction midway, resulting in incomplete houses. To address this gap and ensure completion, -the State is in the process of securing an additional 03 crore to align the assistance with the State's norms. This js being facilitated by creating a separate budget in adherence to relevant government provisionsj to enable effective impletmentation and achievement of targets set. by the Ministry.
Tripura	The State informed that out of the target of 201036 families, only 1 7256 were found eligible, and the remaining are to be removed. ii. For a few beneficiaries} there are Aadharrelated issues thal witl be resolved shortly, and the houses will be completed by July 2025 The State was requested to send a forma) communication the Ministry regarding the remanded houses form the current target to enable the updating of the same on ii. AwaasSoft portal.
Uttar Pradesh	The State informed about remanding 1 7 ineligible beneficiaries, which has been formally communicated to the Ministry. Once updated on the AwaasSoft portal, the sanctioning will be 100%. The State also ensured that all the remaining houses will be completed within a month.
Rajasthan	The State- informed about remanding 1 i500• ii. •ineligible beneficiaries

Gujarat	ii.	2857 landless beneficiaries are yet to be provided land. The State will be able to complete the houses by the end of September, as per the timeline. The State Wii! send the proposal for .grants and the release

		of funds.
15	Jharkhand	The State informed that 6,248 families were fouÖÖÜÖéligfbie) and, thereforej requested revising the target 10 26,91 hou The State was requested to send a formal communication the Ministry regarding the remanded houses form th current target to enable the updating of the same o AwaasS.oft portal,
1 6	Andhra Pradesh	The State ensured that they would adhere to the timeli and complete the pending houses.
17	Uttarakhand	The State informed that _____ beneficiaries were ineligible and need to be removed from target.

The Secretary, Rural Development, Govt. of India requested the states to ensure compietion of thé key activities related to housing interventions under the PM JANMAN within the set deadlines.

The Meeting concluded with a vote of thanks to the chair.

C)

.List of Participants

.From MoRD:

C)

- Shri Shailesh Kumar Singh, Secretary, MoRD
- Shri Gaya Prasad, DDG, RHI MoRD
- Shri Cu. Prasad, Jpint PFMS

Shri Shakti Kant Singh, Director, RH, MoRD

RAj+,PriytSingh, Director, RHI MoRD

- Shri Aéhish Shinde, Joint Director, RH, MoRD
- Shri Ajay More, Joint Director (NIC), MoRD

Erom.States: The Additional Chief Secretary/Principal Secretary and Secretary from the following States: öf

C)

Madhya Pradesh	Ms, Deepali Rastögi, IAS, Principal Secretary, Departme Panchayat and Rural Development

C)

Odisha	Shri Girish S.N., IAS, Commissioner-Cum-gecretary, Department of Panchayati Raj and Drinking Water
	Shri N Padrnakumarj IAS, Cornmissioner, Rural Development Department
Manipur	Sri Sumant Singh, Commissioner, (RD & PR), Government of Manipur
	Shri Lokesh Kumar Singh I.A.SJ Secretary, Rural Development Department
Telangana	Shri okesh Kumar D.S% AS, ecretary, Panchayati Raj and Rurai Development Department
IT amit Nadu	Shri Gagandeep Singh Bedi, Additional Chief Secretary, RD & Panchayatj Raj Department
jChhattisgarh	Ms. Niharika arik. IAS, Principal Secretary, ept o Panchayat and Rural Development
Maharashtra	Shri Eknath Dawale, AS, Principal Secretary) Department of Rural Development
Karnataka	S ri aveen Raj Singhb Principat ecretary, ouslngt ovt o Karnataka
ITripura	Ms. Kuntai Das, Additional Secretary, Rural Development Department
Uttar Pradesh	Shri¯n. IAS, Secretary, Rural Development Department
Rajasthan	Ms Manju Rajpal, Secretary (I/C), Rural Development and Panchaytai, Govt of Rajasthan
IGujarat	Shri Pankaj Joshi, Chief Secretary, epartment o Rural Development
[J harkhand	Shri M.Sivaprasad) IFS, Managing Directorj APSHCL
lÄiSd hra IPradesh	Shri Rajababu, IAS, MD, Housing to GoAP, Housing Department
Ottat•akhand	Ms. Radhika Jha, Secretary; Department of Rural Development, Govt. of Uttarakhand

TELANGANA HOUSING CORPORATION LIMITED

H.No.3-6-184,street 110.17, Urdugaliy lane, Himayathnagar, Hyderabad-29

To

From

V,P.Gautham, IAS

Managing Director

All the District Collectors in the

State

Clr. No.3882 /TGHCL / INDIRAMMA INDLU/Monitoring/2025, Dt.16/6/2025.

Sub'. TGHCL - Indiramma Indlu - Grounding of houses Photo capture in Mobile App - Improper photo documentation by Panchayat Secretarles - Instructions - Technical checklist for AES communicated - Reg, Ref: 1. GO.Rt.no.259/ TR&B (RH&c.A1) dept

2. Ohllhe stage approval report.

It Is hereby Informed that the execution of the INDIRAMMA INDLU Housing Programme Is being closely monitored through the online portal.

The workflow begins wlth markout photo capture by the Panchayat O Secretary/Ward Officer at the respectlve site.

Upon completlon of the basement stage and capture of corresponding photos, the first Installment (basement blll payment) is processed upon approval by AE/DEE/PD/Collector and validated by Al verification. The Al system evaluates the stage completlon Indicated vls-å-vis the submitted photos.

Numerous payments have been wlthheld at the basement stage due to Al dlsapproval, causing repeated grievances from beneficiaries. Upon verification, the following Issues were observed In the uploaded photos:

Dont's

1 . Improper photos capturing only part of the basement.

2. Certlfylng stage completlon before laylng Internal pllnth beams,

3. Incomplete CRS masonry

4. Basements laid only for Single room/two rooms, not adherlng to approved plan {mlnlmum one hall/ one bedroom, one kitchen and toilet).

5, Taking photo after the Basement Is completely covered by mud/gravelt

C) making It Impossllble to vlew the basement/ plinth beams.

C) (A soft copy of Al-rejected cases Is emalled separately with this circular,)

e)

Do's

1, Panchayat Secretary/Ward Officer to capture basement stage completion as follo ws

- All Internal wafts are completed pllnth helght of 45 cm above ground walt for 2 minutes for stablllzatlon of the device to capture appropriate locatlon detalls.
- Must motivate beneffclarles to strfctly follow the approved plan of two rooms, kltchen and tollet/ with pllnth area between 400 to 600 sq.ft,
- Must capture photos from 3 angles: front/ side, and top

2. Assistant Engineer (AE):

- Vislt and guide these actlvltles Pre-excavation, post-excavation, levelllng, short column/RR masonry, plinth beam, centring, reinforcement, slab laying, plastering, flooring, plumbing, etc.
- To conduct frequent Instructions at each stage of construction.
- Must fill and attest the checklist (enclosed; to be integrated into thé online portat by CGG In due course)

3. Deputy Executive Englneer (DEE) & Project Director (PD):

- Must perform desk verificatlon and adhere to above protocols prior to approval,

C)

- Minimum Plinth beam Is laid (for short column structures)

After opening the Mobile App 'for capturtng the geo-coordinates,

- brick masonry, llntel, slab

All District Collectors are requested to Issue clear instructions to field staff to ensure accurate photo documentatlon and compilance with these guldennes so as to ensure smooth release of payments,

Sd/- 16.6.2025

Encl: Check list by the AE

MANAGING DIRECTOR

Copy to all the Project Dlrector(H) In the State for necessary action,

//Attested//

Executive Engineer

Ex tive Engineer

TELANGANA HOUSING CORPORATION LIMITED

H.NO.3-6-184, STREET NO 17, HIMAYATNAGAR HYDERABAD

MEMO

Memo

Memo No. TGHCL/986/TDHs / Mason Traininq [NAC /2024 Dated: 24.06.

(7 Sub: INDIRAMMA INDLU- Construction of Demonstration Houses-
Use affordable technologies - Completion of Demonstration houses
- Reg ,

Ref: 1) Lr .no. TGHCL/986/TDHs / Mason Training /NAC / 2024
Dated. 09.12,2024 of MD,TGHCL,Hyderabad
2) Memo No: TGHCL/986/TDHs / Mason Training /NAC / 2024 Dated.
29/03/2025 (Issued to all Project Directors, TGHCL).

Immediate attention is invited to the reference 2nd cited, wherein

o instructions were issued to adopt the most and affordable cost effective

technologies in foundation, walling, and roofing for the construction of Demonstration Houses at Mandal Headquarters.

The purpose of congtructing Demonstration Houses at Mandal Headquarters is to clearly illustrate the feasibility of building an INDIRAMMA INDLU, Two house with a separate kitchen & toilet within plinth area of 400 sq.ft. and cornplete it within unit cost of Rs, 5,00/000/-.

Four alternate technical designs, offering cost effective options in terms o of time and expenditure, have already been communicated for adoption. These houses are to be constructed departmentally, without any deviation from unit cost. The funds were already released in the month of January' 2025 to C) compiete the houses.

But, in spite of repeated requests made, none of the PDS have shown e interest in adopting cost effective technology houses. But, instead conventional method of constructions are being followed. This• resulted defeating the core objective of buiiding demonstratiön houses to showcase innovative and C) economical housing options to beneficiaries.

C)

Further, it has come to notice through various newspapers that adverse reports are being Published stating that no Techhology demonstration houses have been constructed to showcase to the sanctioned beneficiaries under INDIRAMMA INDLIJ programme. This raises concerns regarding how beneficiaries are being motivated to adopt economical and cost effective U) housing methods.

C)

The overall state level performance stands 73%, with Demonstration -houSeS ounded and (96) houses are completed as the permitted (500) houses in the state. The :t wise performance are overviewed and placed in the statement Annexure-I & Il .

In light of the above, all Project Directors are hereby directed to construct the remaining houses particularly those in not started to lintel level stages using cost effective technologies, Noncompfiance wjii be viewed seriously and appropriate disciplinary action wili be initiated against defaulting officers.

Sd/-24,06.2025
CHIEF ENGINEER

To

All the Project Directors C)
In the State of Telangana

Copy to all the District Collectors for information and n/a

// Attested // (3

Sridhar
24/6/2025
Executive Engineer

C)

GOVERNMENT OF TELANGANA
INDUSTRIES AND CONWERCE (MINES.) DEPARTMENT

Memo No.2691/M.l(f)/2025t Dated:25.06.2025

Sub:- Mines & Quarries — Regulation of Sand Mining in l, I l & Ill Order Streams implementation of Online Transit Pass System - Measures to Prevent Illegal Mining and Transportation of Sand - Regarding.

Ref:- 1. Telangana Sand Mining Policy 2014) G.O.Ms.No.38, Dated: 12.12.2014.
2. Telangana Sand Mining Rules 2015, G.O.Ms.No.3, Dated:08.01.2015.
3. Sustainable Sand Mining Management Guidelines, 2016.
4. Government Memo No.8050/M.l(1)/2018-2, Df:16.02.2Q19.

in the references cited, Government has earlier issued Sand Mining Policy vide G.O.Ms.No,38, dated 12.12.2014 and Telangana State Sand Mining Rules, 2015 (TSSMR2015) vide G.O.Ms.No.3, dated: 08.01, 2015. Further, Sustainable Sand Mining Management Guidelines, 2016 & 2020 (SSMR) were issued by the Ministry of Environment, Forest a Climate Change (MoEF&CC),

2. Sand mining from l, Il, and selected Ill order streams are permitted for o tocal/domestic needs and for government works. The District Level Sand Committee (DLSC)) under the District Collector, is authorized to identify eligible sand reaches, approve the mining plans, and ensure regulatory compliance. Local bodies or agencies nominated by the DLSC may carry out extraction of sand by issuing online Waybills.

3. Through the reference cited, the State Government has permitted Centre for Good Governance (CGG) for monitoring and maintenance of software for Mana Isuka Vahanam (sand taxi) throughout the State.

4. As per the Telangana Sand Policy 2014 and as per the Rule 3 of Telangana Sand Mining Rules, 2015, the sand extraction shall be under electronic surveillance and o electronic documentation.

C) 5. Sand is a critical minor mineral used extensively in infrastructure development. Unregulated and illegal sand mining, especially in l, Ill order streams leads to adverse environmental impacts including groundwater depletion, riverbed degradation, and ecological imbalance. Further, it also leads to substantial revenue loss to the government,

6. In recent times, several adverse news items have been reported in the print o and electronic media regarding illegal extraction and transportation of sand from . Order l, Il & Ill streams in the district.

7. To address these issues and in order to curb the illegal transportation of sand, C) it has been decided now to enhance regulatory oversight and improve transparency in sand extraction and transportation through the introduction of a digital tracking and control mechanism.

8. Sand Taxi system streamlines the entire process of sand delivery management through tractor registrations, online booking of sand and its delivery, real time monitoring and tracking of sand booking, decision making through dashboards and U grievance redressal.

279

9. Despite the availability of l, Il Ill order streams in many districts, there are only 9 districts who are actively using Sand Taxi in the state. Therefore, all the District, Collectors are hereby_ instr_ucted- and- adv.ised•--ee, use Mana --Isuka Vahana

(Såhd Taxi) for permitting the usage of sand for local use from l, I l , Ill order streams. The detailed guidelines and SOP for Mana Isuka Vahanam is attached for your reference. The District Administration, if required may coordinate with TGMDC in implementation and onboarding of Sand Taxi through Centre for Good Governance (CGG)a

N.SRIDHÅR
PRI. SECRETARY TO GOVERNMENT & SECRETARY TO GOVERNMENT
M&G)(F

All the District Collectors in the State. (w.e.) Copy. Yo:
The Director of Mines Geology, Hyderabad.
The Vice Chairman & Managing Director,

SECTION OFFICER

M/S. Telangana Mineral Development Corporation Limited, Hyderabad.(w.e.) C)
Sf/Sc,

//FORWARDED : : BY ORDER/ /

C)

(0

C)

O

Brief Overview of Mnna Isykn Vahanam (Ml_u

1. Overview:

In alignment with the e-Governance initiatives of Telangana State, Department of Mines and Geology had embarked on an arnbitiou mission of streamlining the entire process of Sand delivery management system thi'ough tractor registrations, online booking and its delivery, real time monitoring and tracking of sand booking, decision making through dashboards, grievance redressal e

The MI V system offers fully online services with automated workflows, eliminating the need for manual intervention. It enables citizens to obtain sand at the lowest possibie cost, track its delivery to their and receive alerts at every stage of the delivery process, The MI V system generates employment opportunities for tractor owners within the district and helps prevent unauthorized sancl excavation and transportation. It also enhances the efficiency of sand delivery, ensures transparency in transport operations, promotes the o responsiveness and accountability ofthe Sand Management Society, and supports the long-term sustainability of the solution.

CD

2. Key Stakeholders of the MI V application

- Department of Mines & Geology, Telangana State
- District Collectorate Offices
- Assistant Director, Mines & Geology
- Sand Management Societies — throughout the state of Telangana.
- Tractor Owners
- Customers
- Payment Gateway Agencies
- SMS Gateway Agencies
- CGG eGovernance Team & Management

CO

3. Current Status of Implementation

As on today MI V has been implemented in 13 districts and 9 districts have been actively using since 2019. Districts which are not actively used and Districts which are yet to be onboard details are included in Annexure-I of this document.

C)

w)

Stnndgrd Operating Procedure (SOP)

for Mana Isulcn Vnh,annm (MN) District Onbonrdinz

281

1.Prereguis.ites fort District Onbonr(ling

Step 1. District Onbonrding Process

District authorities are responsible for ensuring the following pferequisites are completed before onboarding MI V:

- Identify Sand Reaches

. Selection of appropriate sand reaches for sand excavation and transportation.

- Obtain Requlrcd Permissions

Necessary approvals such as environmental clearances, mining permissions, etc.

- MOU Execution

Signing of the Memorandum of Ufiderstanding (MOU) between the Centre for Good Governnnce (CGG) and the District Sand Management Society.

- Shnre District Sand Management Society Bnnlc Details to CGG

For integration of payment services into MI V application with partner banks,

- Rate Chart Preparation

Define rate per distance (Ian range in specified template) for sand excavation charges.

C)

- Villages Mapping to Sand Reaches

Assign each viiinge to its nearest reachable sand reach for optimal logistics.

- Vehicle Ikegistratiöll and define Security Deposit Amount for Registration Enable vehicle owners to register their vehictes in the M J V system by Security Depositdefined by district Managernenl Society for sand transportatiofi, step 2. 'CGG Activities:

After Step l , Concerned district officials should share Sand Reach and Rate Chart details to the CGG team, The CGG team will update the software with new district information along with sand reach and rate chart details in the Mt V software. Once MI V softWare is updated, COG team will do the following.

- Bank Account integrntion

Configure the District Sand Management Society's bank details in the system.

- District Logins CreatioiiC) Generate required user credentials for districv(evel users.

- Applicntion Demonstration & Trfiiniiig

Provide orientation and demo of MlV Web & Mobile applications to district teams.

Step 3: Application Lnunch

After Step and Step 2, and successful demo of MI V application to the respective district Collector and the district officials, tbe District Collector witl launch the MV appljcation and ensure the reachability of the MI V application to concerned district citizens through Print and Electronic Media of that district.

C)

2B

Operational Process

Users can access the application through (he Web or Mobile application,

Website URL: https://tgmiv.cgg.gov.in/home

Mobile Apps for both Android and iOS:

1.Munn Isulea Vilbnnnm Customers, Vehicle Owner and Drivers

2. MI V Officer AD-Mines, SRO nncl Police.

Key Roles and Responsibilitics

C) l, District Collector

- Sand Reach Oversight

Maintain authority over alf sand reaches in the district.

- Monitor Dnsll board & Reports

Use MIS reports and dashboards for tracking operations and performance.O

2, AD-Mines

O

- Aeach Activation Control

Enable/disable sand reaches as per availability or demand. • Vehicle Approvnl

Review and appr.o.ve veh icie registrations.C)

- IVInnuaI Booking Åilotment

Assign bookings manually during peak demand when auto-allotment slots are exhausted.

- Paythenl• to Drivers

Initiate oa ᵛment.s to drivers/üwner's post district collector ˢ s approval.

- Booldng Cancellation Refu nds

Initiate refi.lfld payment process by Ad Mines,

- Security Deposit lie-funds

Initiate the Security Deposit payments process by Åd Mines.

3. Vehicle Owner/brivec

- Vehicle Registration

Register willi vehicle •documents and security deposit as defined by the district authority.

- Dnnble/Disable Vehicle StnfusC.

(Registered vehicles Owner's login wili have option to enable/disable the status of Vehicle. I f efiablecli the Vehicle Owner/Driver will start receiving bookings and vice versa. • DooldngConfirm

Accept bookings via the mobile app post-allocation within one hour,

C)

O

4. SRO and Police

C)

- Reach-Level Control
  SRO to monitor vehicles and activities in the assigned sand reach zone.
- Vehicle Entry Validntion
  Only vehicles with valid bookings are allowed inside the sand reaches.
- Load Verifica {ion
  SRO captures vehicle photo post loading, confirms driver details, and marks vehicle as "In-Transit."
- Police
  Police can validate sand vehicle bool<ings through the app to verifr legality.

5. Customer

- Registration
  Register on Ml V platform (web/mobile) using valid identification.

- Sand Booking

  Select nearest active sand reach and place booking through app/web, followed by online payment.

- Track Status

  Monitor order status and vehicle allocation.

- Delivery Confirmation

  OTP-based delivery confirmation once sand is received from the driver.

Note: Following cost components are out of scope of work.

I. External devices like e-POS machines, etc.
II. Vehicle tracking Systenn- Device, SIM and Software Maintenance
III. Cail Centre resources or project associates or any other workforce to be deployed at the district offices to coordinate with the Sand Management Society for Web & mobile based IT Solution "Mana Isuka Vahanam".

C)

Annexure-I

-MGTISIil(a-Vnma-harn Operational and Non-O perati011fll District Information C)

1. Operntionnt Districts

The districts which are actively using the Ml V platform:

I. Jogulamba Gadwal
II. Karimhagar
III. Mahapubnagar
IV. Mancherial
V. Nagarkurnoot
VI. Nelgondä
VII. Narayanpel
VIII. Wanaparthy
IX. Suryapet (Recently launched & fully operational)

C)

2. Non-Operntiotv,ll MI V Districts

The districts are onboard-but a're not using the platform currently:C)

I. Bhadradri Kothagudem (Inactive since Jan 2025)

u. Jägtial (inactive since Jan 2025)O

Ifl. Peddapafli (inactive since Jan 2025)

IV. Muiugu (Onboarded in 2019 but never operational since launch)

3. Saud Renehes ble Districts - Scope of onboarding the MI V applicntion

I. Ädi•labad Nirma!

II.

III. Komram BheemC)

IV. Rajanna-Siricillä V. Nizemabad .

VI. Kamäreddy

VII Jayashänkar Bhupalpally

VIM. Mahabubabäd

IX. Khatnmafü C)

4. Following districts does not hnve Snnd Renchc.9 As per the euncerned AD-Mlnes update.

I. I-lanumakonda

II. Wacangal

III. Jangaon

IV. Medal(

V. gah•gareddy

VI. Siddipet .

VIL yacladri b huvdfiagiri

C)

Vilt . Vikarabad

. MedchaJ - Malkajgiri

. Rangareddy

287

Process Flow Diagrams

1. Customer Sand Booking

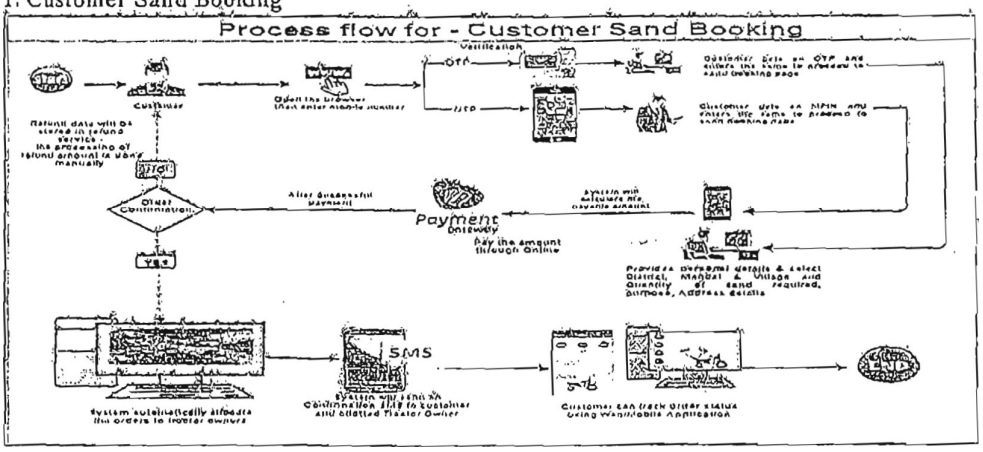

2. Sand Order Delivery to Customer

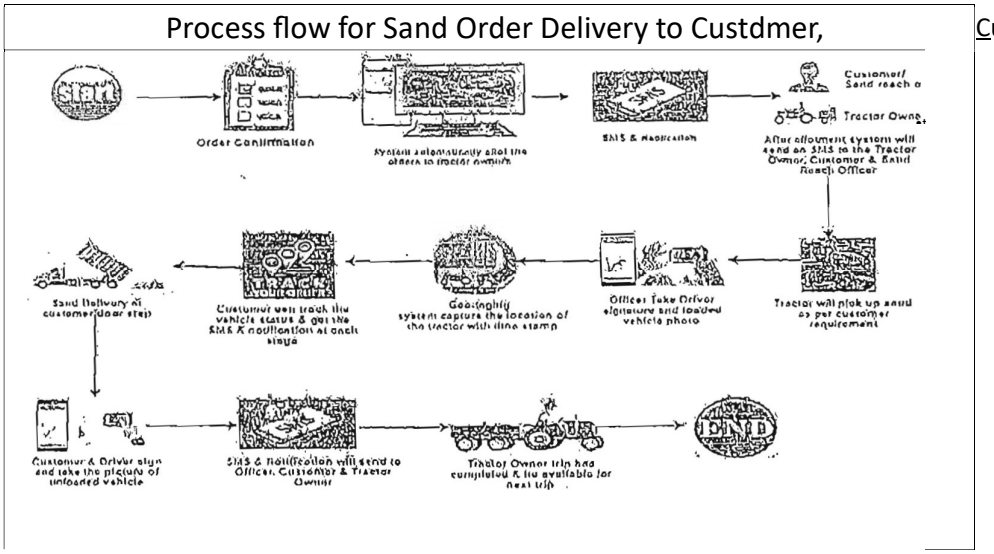

3. Tractor Owner Registration

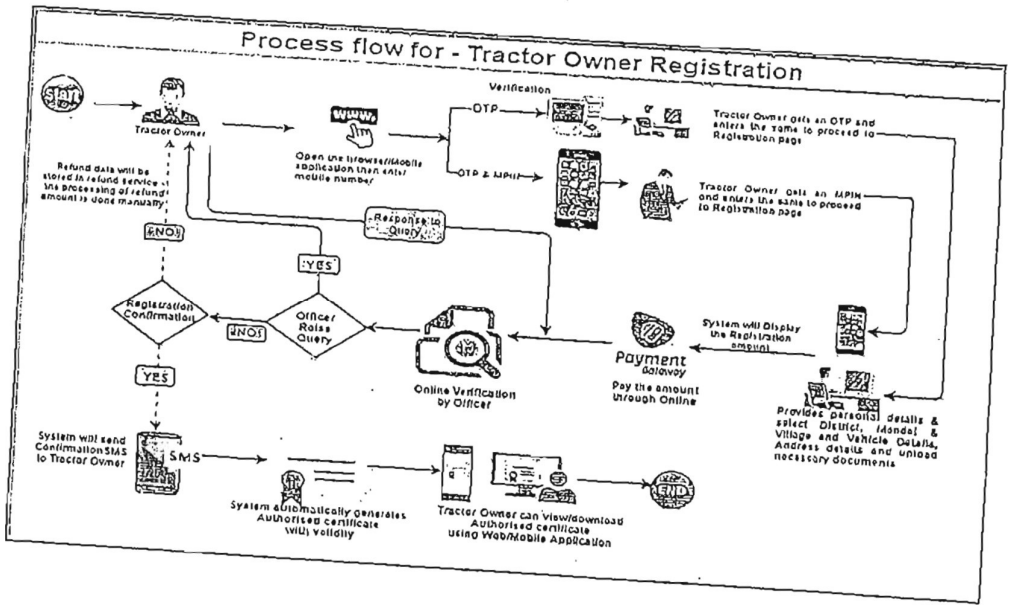

Grievance Monitoring system

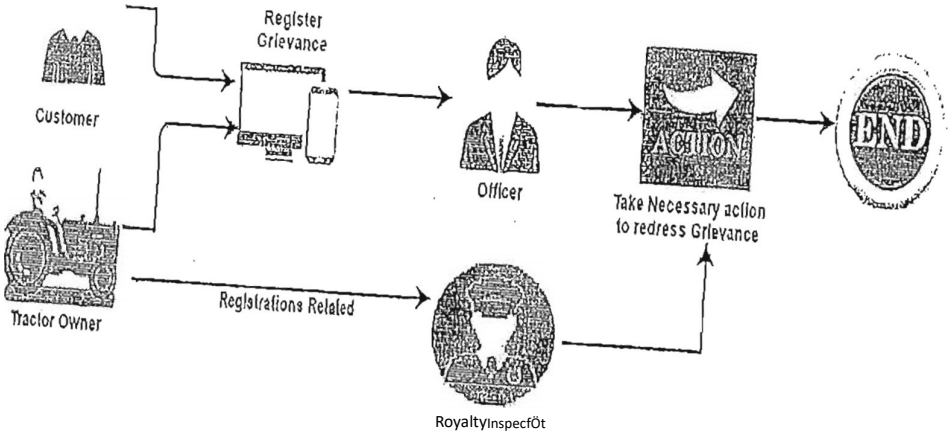

4. Grievance Monitoring System

GOVERNMENT TELANGAN/\

or:

TRANSPORT, ROADS & BUILDINGS (RH&C.A1) DEPARTMENT

L r No.4165/RH&C.A1/2025 DL%3LQQ2025.

Fronn

The Secretary to Governnnent (FAC) (I-touslnq) , Transport, Roads & Bulldinos Departmcnl', Telangana Secretariat/ Hyderabad.

To

The Managing Director,

Teianga•na Housing Corporation Limited, Hyderabad.

Sir,

Sub, TIR&B (Housing) Department-Indiramma Indiu-Relaxation for making p.ayrnent to houses of above 600 sft upto Basernent Level in Phase-I. pilot villages, subject to obtaining beneficiary consent to restrict the plinth area for further stages -- Orders Issued - Reg.

Ref.. l.G.O.Ms.No.7, T,R&B(RH&C.A1) Dept, dt:09.03.2024.

2.From the M.D., TGHCl-t Hyderabad/ cr. No.3882 /TGHCL/INDIRAMMA INDLU/Monitoring/2025, DC. 12/05/2025 and 2305.2025.

T,R&B(RH&C.A1)

***

3.G.O.Rt.No.287, Dept, dt•.30.06.2025. CD

In the circumstances stated by the Managing Director t Teiangana Housing Corporacion Limited, Hyderabad jn the reference 2 nd cited and after careful examination of the matter, Government hereby accord onetim•e relaxation Co orders issued vide G.0 3 rd cited for making payment to the c houses constructed above 600 sft upto Basement Level i.n Phase-I p!l[l]ot villages, subject to obtaining benefic.iary consent to restrict the plinth area.

C) for further stages,

2 The Managing f)irecCor, Telangana I-lousing Corporation I-irnited, Hyderabad, shall take furlhcr necessary actlor) In l•he matter.

You rs talthfll I ly

for Secretary Govern nnent(FAC.)

The PS to Hon/bJe MC Housing).

o The PS to Principaf S.ecretary to CM (I-loushlg).

The PS to Secretary to Government(FAC)(Housing).

C) Ail the District Collectors. SF/SC.

C)

C)

0

OF

ABSTRACT

T,R&B (Housing) Department - Indiramma Indlu Scheme - Restricting the maximum plinth area to 600 sft Orders - Issued.

TRANSPORT, ROADS AND BUILDINGS (RH&C.AI) DEPARTMENT G.O..Rt.No.287

D.t:aO.06no.25r

Read the fOIIoWina.:

1.G.CMs.No.7, T,R&B(RH&C.A1) Dept,dt:09.0

2. From the M.D., TGHCL/ Hyderabad, Lr.Noa3882/TGHCL/ INDIRAMMA INDLU/ Monitoring/2025, rpt, 12/05/2025 and 23.05.2025.

ORDER:

In the G.O. I Sl read above, Government commenced the new H01jgjng• Scheme "INDIRAMMA INDLU t' for constructjon of 4/50/000 houses with a financial assistance of Rs.5.00 lakhs duly following eligibility criteria vide

C) G.O,Ms.No.7/ T,R&B(RH&C.A1) Department/ dt:09.03.2024 from out of the Prajapalana applications received,

2. In the letter 2 nd read above, the M.D. / TGHCL, Hyderabad has stated that, under Indiramma Indlu Scheme Government are providing 100% o subsidy of Rs.S/00/000/- for construction of house of 400 sft. Plinth area, without adding any burden on to the beneficiary. (t) If the houses are constructed with large area, the cost of construction wilt go up an'd there shall be an additional out-of-pocket expenditure leading to debt trap and stoppage of work in midway of construction, (ii) large houses may attract complaints from general publjc/vigilance/audit as to the genuineness of the beneficiary. He has Cherefore requested the Government to issue orders restricting the maximum plinth area to 600 sft for houses under Indiramma Indiu Scheme.

3. In view of the circumstances stated above and after careful examination of the matter, Government hereby issue orders restricting the maximum plinth area to 600 sft for houses und.er Indiramma Indiu Scheme.

4. The Managing Director, Tetangana Housing Corporation Limited/ Hyderabad, shall take further necessary action in the matter.

(BY ORDER AND IN THE NAME OF THE GOVERNOR OF TECANGANA)

VP GAUTHAM

SECRETARY TO GOVERNMENT(FAC)

To

The Managing Director,

Telangana Housing Corporation Limited/ Hyderabad.

Copy to

The P.S to Hon'ble M(Hou-$ing).

C) The PS to Principal Secretary to CM (Housing).

The PS to Secretary to Government(FAC)(Housing).All the District Collectors.

SF/SC.

GOVERNMENT TELANGAN/\

C) //FORWARDED BY ORDER/ /

C)

SECTION OFFICER

GOVERNMENT TELANGAN/\

OF

TRANSPORT, ROADS & BUILDINGS (RH&C.AI) DEPARTMENT

Lr.No.4651/RH&C.A1/2025 Dt:01.07.2025

The Secretary to Governtnent (FAC) (I-lousing),
Transport, Roads & Bultdlngs Department,
Telangana Secretarlatf
Flyderabad,

To
The Managing Director,
Telangana Houslng Corporation Limited,
Hyderabad.

Sir,

Sub: T,R&B(Houslng) Department - INDIRAMMA INDLU scheme
.. Cancellation of not started houses in pilot villages (Phase -I) after a period of 45 days of sanction orders Issued Orders issued - Reg.

Ref: From the M.D., TGHCL/ Hyderabad, Lr.No.1116/TGHCL/ E&P/INDIRAMMA INDLU/2024-% Dt:02.06.2025

The attention of the Managing Director, Te(angana Housing Corporation Limited, Hyderabad is invited to the reference cited and after careful exarnination of the matter, Government hereby authorize the M.D.,
C) TGHCL, Hyderabad Co cancel the not started houses after a period of 45 days of sanction orders issued, on receiving proposals from the District Collectors along with consent letter of beneficiaries,

Yours faithfully C)

for Secretary to Government(FAC)

C)

C)

GOVERNMENT TELANGAN/\

C)

File

File No.TGHCL-ENGG/SCHE/10/2025-ENGINEERING SECTION

TELANGANA HOUSING 'CORPORATION LIMITED?

H.NO.3-6-184/ STREET NO. 17, H(MAYATNAGAR, HYDERABAD-29

To

V.P. Gautham, IAS,, ... All the District Collectors

Managing Diréctor TelaBgana State,

Lr.No.1116/TGHCL/E&P/INDIRAMMAINDLU/20241 15/07/2025

Sub> TGHCL- Indiramma Ind\u - Eligible beneficiaries who could not be sanctioned because of basement completion- report

Ref: 1. G,O. Ms. No. 7, AE verification report in portat dt.21.0

2. This Office circular •No. Circular NO.1116/TGHCL/E&P/INDIRAMMA INDLU/2024, Dt,09/03/2025,

Kind attention is invited to the subject and refs, cited.

It is noticed that, some of the families are applied for sanction of house during Prajapalana and due to 'coverage of the previous Housing o Scheme, the field functionaries are considering them as "Already benefited (7 beneficiary" and not getting sanction under INDIRAMMA INDLU. A few of these beneficiaries were constructed up to basement level only and left incomplete tili now, and they are requesting the Officiais for sanction of house. C)

It is also noticed that the Indiramma committees have referred certain cases to coilectors to sanction houses to the families who are o under previous sanctioned beneficiaries and where payments were made up to Basement Level under previous schemes,

Therefore, it is requested to send a detajied report on this matter under the following categories to take up the matter with Govt., for taking necessary action in the matter.

O 1, The eligible beneficiaries who have completed Basements without sanction.

C) 2, The eligible beneficiaries who completed basements before generation of proceedings

C) 3, The eligible beneficiaries "Already benefited under earlier schemes up to Basement level".

293

NoaTGHCL-ENGG/SCHE/10/2025-ENGINEERING SECTION

Vp Gauthann
Director Of Municipal Administration

//Attested//
15/7/2025
Executive Engineer

File

Signed by VP GAUTHAM
Date: 15-07-2025 13:04:45
Reason: Ap.pooved

PROCEEDINGS OF THE MANAGING DIRECTOR TELANGANA HOUSING CORPORATION LIMITED, H.NO.3-6-184, STREET NO 17 , HIMAYATNÅGAR ,H YD-29

Present Sri. V.P. Gautham, IAS. ,

Proceeding no. TGHCL„ENGG/SCHE/17/2024-ENGINEERING SECTIONPart(l) Dated:

Sub: Construction of Demonstration houses - Cancellation of Not-started Houses- Orders -issued - Reg

(7 1) MD, TGHCL, instructi6ns During the video Conference held on 02.07, 2025

2) Consent letters received from all the Project Directors, TGHCL.

3) Note approval of the MD, TGHCL, on dated. 14.07.2025

ORDER:

The Govt., has sanctioned 500 Demonstration Houses under the INDIRANuMA INDLU programme, aimed at showcasing innovative affordable C) and cost-effective construction technologies for potential adoption by beneficiaries. These houses are being constructed within the premises of Mandal Headquarters, in the vicinity of the MPDO offices. Project Directors have been instructed to ensure the use of affordable and cost-effective

C) technologies in the construction of these houses.

C) Out of the total 500 houses:

. 0 381 houses have been grounded, .

C) 0 56 houses are at the mark-out and excavation stage, and 0 63 houses are yet to be started.

C)

During the video conference held on 02,07.2025, the Managing Director,

C) TGHCL, instructed that all ''Not Started" Demonstration Houses be C) cancelled.

C) The Senior Technical Consultant, TGHCL, has reviewed the progress of the

C) Demonstration Houses on 08.07.2025, with all Project Directors across the state over telephone. While some Project Directors expressed readiness to C) .begin construction, others cited constraints particularly non-availability of suitable land, as the primary reason for being unable to start the houses at the "Not Started" stage. Accordingly, Project Directors were instructed to submit formal proposals for the cancellation of such houses. .

C)

CH CLERK DISPATCH

dA,fE: 18 07 2025 295

No.TGHCL-ENGG/SCHE/17/2024-ENGINEERING SECTION-Part(I)

In the reference 2 nd cited, all the Project Directors have submitted their consent for the cancellation of the "Not Started" houses. Additionally, the Project Director of Wånaparthy & Siddipet Districts has requested the sanction of additional Demonstration House.

The MD, TGHCL, in the reference 3 rd cited has ordered the cancellation of (63) Demonstration houses that have not been started.

In view of the circumstances explained above, the (63) Demonstration Houses that have not been started are hereby cancelled for the districts listed in Column No. 12. The Sanction of additional houses to Wanaparthy and Siddipet districts is indicated in Column No. 13. The net number of
Demonstration Houses district-wise is shown in Column No. i 4.

No	DistHct	No of Mandals	DHS sanction ed	Mar out en	Stage of Work				Total houses grounded (6 to 9)	Not started hour	Houses Cancelled	Additionat Sanctio	Net Hous es
					Basem i evei	Walli	of Cast	Comple					
									10		12	13	14
	TOTAL	569	500	56	63		12	144	381				44 d

File

1	Nalgonda	31	25							10	10		15
2	Z*iiiiiiä												
	Nizamaba	33	25						16				21
5	Nfrmat		16						12				12
	Peddapalt	14	13										
	Rangared	21	18										14
	edak	21							12				
	ikarabad	18	15						1 1				l i
10	ahabubn gar												
11	adadri Bhuvanagi	17	14						10				
12	adwal	12	12										10
13	Hanmakon	14	12						10				10

I 'UN-rart(l)

14	ncheda	18											13
15	Narayanp												

16	dflabad		18					15	17				
17	angaredd	27	25						22				24
	{rici(la	13	12						11				11
19	uryapet	23	20					14	19				19
20	ffabad	15	15						13				14
21	ahabuba bad	18							11				18
22	angoan	12							12				
23	Kamaredd	24	22				12		21				22
24	Kadmnaga	16	13					13	13				13
25	Khammam	21											18
26	Kothagude	22	22			o	10	11	22				22
27	edchal												
28	ulugu												
29	Nagarakur hoot	20	17						17				
30	Iddipet	26	23						23				26
31	anapart hy		11						11				
32	arangal	13											

The Project Directors are hereby instructed to ensure the timely completion of all Demonstration Houses by the end of JulY2025 without fail. It is essential that all construction works are undertaken by duly adopting affordable and cost-effective housing technologies, as recommended.

For the houses that are currently at the marking, excavation, walling stages, the Project Directors shall incorporate appropriate cost effective technologies are as follows:

Foundation Shear wall Technology, RCC short columns, isolated Stone Column, Pre cast RCC, Open foundation.

ıperstructure : 8" SC block masonry; RCC frame with 6" SC block masonry, Precast RCC, Rat Trap bond Masonry, Stabilized Mud block Masonry, Laterite / Shabad Stone masonry.

Roofing , Pre-Cast R.C.C, RC Joist & Plank, Mangalore tiled filler roofing ,Shabad Stone Roofing over rafters, Matoor Slab roofing and shear wall technology slab roofing.

File

These alternative cost effective technologies solutions shall be uniformly adopted across all eligible Demonstration Houses to showcase innovative, sustainable, and economically viable construction practices.

Strict adherence to the prescribed timelines and technical specifications is

Strict adherence to the prescribed timelines and technical specifications is mandatory, with no scope for any deviations or delays.

// BY ORDER

17/07/2025
Chief Engineer// BY ORDER/ /
CHIEF ENGINEER

To
All the Project Directors
TGHCL, in the State
Copy to all the District Collectors, in the state for information. Copy to the General Manager (Finance) for information.

Signed by M Chaitenya
(umar
Date: 17-07-202518:01:31
Reason: Approved

1

Fire No.TGHCL-ENGG/5/2025-ENGINEERING SECTION

TELA:NAGANA HOUSING COÄPRöAÄflON LIMITED HYDERABAD

From:

Sri. V.P Gautharnj IAS., The Convene?

Managing Director State Level Bankers Commlttee (SLBC) Hyderaba d. Lr no, 82075 / TGHCtÅpeNGG[5Y2025- Engu Section 20.0.2025

sir,

Sub: Fadllltatlon Of Instltutlonal. Credlt support for INDIRAMMA INDLU Benefi cl arles Ih• Ally-lmetit with PMAY-G Guidelines.

and Rural: 'Déve10ph±ntdbJeGtlves - Request - Reg.

Ref: Lr. No. TGRO.HYD/CPD/411118/A6/2025-26, dated 1306.2025 frordthe DGM, 'NÅBÅÄD!, Hyderabad

C)

C)

I invlte your attention to the letter reference clted , The State (3 Level Bankers' Committee (SLBC). plays a vltal role in advancing financial Inclusion, strengthening Self'Help Groups (SHGs), and ensuring the

C) effective Implementätton of government sponsored schemes that empower rural communities,

C)

C) guldét:ines As specifically per th e Para 112, hantr;l it is clearly Awaas stated:Yolana - Gramin (PMAY-G)

'"A wJlllng benefielery,ls to be faclllltated to avall Instltutlonal finance up tb Rs.70,000/-," wlth the facl/ltatlon process to be actively monitored by the SLBC, DLBC, and BLBC.

File

. The InstitutlønS [lke 'NABARb. are also play a key role in supporting rautal development by :

a. guidance and developmental s, and

C) b, rural Infrastructure projects Ptö:vldihg sUppott to[t] rural financial lnStIWtlohs, financlng projects through schemes (Eke the Rural Infrastructure 6evelopment Fund (RIDF).

In pursuance of these guldellnes, the Government of Telangana has. launched the flagship INDIRAMMA INDLU programme, wfth the aim of constructing 20 läkh [i]h0USéS for the shelterless poor and the most

vulnerable sections of sociéty. Under this Initiative, more than 2.60 lakh

C)

houses have already been sanctioned nearly all villages In the state and thise houses ere dovetalled WIth PMAYÄG to access central fundlrig and promote integrated implementation, Each uttlt Is provided with an assistance of As. 5.00 lakhs, and the plinth area of the houses ranges from a mlnlmum of 400 sq. ft. to a maximum of 600 sq, ft. C)

The Department of Housing Is releaslng financial assistance to beneficiaries In four stages based on the progress construction faea, C) Basement Level (BL), Roof Level (RL), Roof Casting and Completion. However, It is observed that m_any beneficlarles are faclng difficulties in procuring construction materlals and managing Jnltlal costs; as the Initial O

•installhent of Rs 1,001 takh Is released only after completion of the basement level (BL). This requirement necessitates the benefitlary to moblllze inltlal funds from their own resources, whtch has proved to be a C) significant challenge for many underprivileged families.

C)

C)

Further , many of the sanctioned beneficiaries belong to SC/ST, slngle women. and landless poor households, making it extremely diffcult for

C)

them to mobilize Inltlal funds from informal sources.

O

In light of the above, 4t is requested that the SLBC may c° nsider initlating

C) the following measures to facilitate and enhance institutional credit suppåft, as a le.fiu}ng advance for the INDIRAMMA INDLU programme, as part of the Rural Housing,

D

Issue dlrectlons to all member banks to extend Instltutlonal credit, as a C) lending advance of Rs,1.00 takh to eligible and wrllling beneffclarles as part of rural houslng to support Initial constwctlon ta ᶜtivltles.

2. Ensure this facilltatlon Is aligned with Para 12 of-the PMAY•G Gujde]lnes, and th'at Implementation Is appropriately monltored through SLBC, DLBC, C) and BLBC mechanlsms.

3. Recognlze such lend]ng under priority sector, rural houslng financq to C) faclllate, smoother credit flow and regulatoty compliance*

4,dnstruet DLBCs and BLBGs to coordlnate closely with (eld level Housing Department officials to Identlfy and support ellglbleᵛ beneftlarlgso

5. Explore collaboration wlth NABARD to facilitate credit enhancement and

).TGHCL-ENGG/5/2025-ENGINEERING SECTION

financial support for the Indiramma Indlu rural housing prdqnmme.

in Hfls It Is ilSd suggested that bitib may sddpt a; simplified app81Stl affd détUmefitadöh #tbeess for such loans, possibly ugtng a ekisång vetitcaMOfi data available with the Hous(nq Department. Fufther, a district level coordination mehanl.gm ihVOMh9 eot!eetorsj MPDOs and hbuslhg to mot'lftor eredtt officials may also be instituted f8éfIftation and C) promptly chilleqeg gnd issues . address any implementation cl

Tempta ståte HoUSifi' corporation provide 86y further ihföfiüätion or hold tonsuft&tions for Smooth facilitation of er€dft to the beneficiaries of INDIÄAMMA INDLU programme,

C)

An early action In the, matter is hlghly appreciated.

C)

Yours faithfully [redacted]

C)

Copy to the DGM, NABARD for information and necessary action.

NABÄÄDfor ihformatfon C)

Copy submitted to the Principal Finance secretary, .Govt of Tetangana.

C)

Attested

Superintending Engineer

by VP GAUTHAM
20.07002b 01:04

File No.TGHCL-ENGG/612025-ENGlNEERlNG SECTION

TELANGANA HOUSING CORPORATION LIMITED, H.NO.3-6-184, STREET NO 17 HIMAYATNAGAR HYDERABAD-29

From:
Sri. V.P. Gautham, IAS.,
Managing Director

To
All the PDs(Housing)
in the State of Telangana

Lr no: 828231/ TGHCL-ENGG/6/2025-ENGlNEERlNG SECTION

2fIDYu&2b

Sir,

Sub: Rural Mason Training (RMT) programme under RSETI frame work- Mobilization of willing Ruraf youth for Mason Training - Reg:

Ref: Review of RMT under RSETI through Video Conference held on 17.07.2025 by Joint Secretary (Skills) and Deputy Director Generat (Ruraf Housing), Ministry of Rural Development, Gol

O

Kind attention is invited to the subject and reference cited above, where in the Ministry of Rural Development (MoRD), Government of India, has undertaken a review of the Rural Mason Training (RMT) programme through Rural Self Employment Training Institutes (RSETI) framework, with a focus on state wise mobilization, beneficiary identification, training calendar, and fund flow arrangements from tate O Rural Livelihood Mission (SRLM) to sponsoring banks.

Under the RSET! framework, the Rural Mason Training (RMT) programme is C) being implemented with the following objectives:

- To equip unskilled or semi-skilled rural youth (preferably from the C) local area) with standardized masonry skills aligned with the National Skills Qualification Framework (NSQF).
- Build a skilled workforce to assist PMAY-G (Indiramma Indlu) beneficiaries in constructing safe, durable, and quality houses, while simultaneously empowering trained youth to undertake skilled wage employment or self-employment in the construction sector.

recognized certificates, thereby improving their access to employment opportunities within and outside the local area,

- The training will be conducted both fully on-campus and at designated training sites.
- Free boarding, lodging, and training materials are provided by RSETIs, with full support from MoRD, ensuring a barrier free training environment for all selected participants.

The Ministry of Rural Development (MoRD), Government of India, has directed all States to mobilize a minimum of 240 willing rural youth per district for the upcoming Rural Mason Training (RMT) batches scheduled to commence in the month of September/October 2025.

In light of the above, all District Collectors are hereby requested to:

a. Recognize and explore the strategic importance of the Rural Mason Training (RMT) programme in achieving the goals of rural employment generation and effective housing delivery under PMAY-G (INDIRAMMA INDLU).
b. Ensure to give wide publicity and local mobilization through field functionaries and convergence with line departments.
c. Furnish the list of at least 240 per district eligible and willing rural youth participants for Mason training to this office within 15 days, to facilitate coordination with RSETIs and finalize the training in batches.

This matter should be treated as "URGENT".

- Priority is to be given to youth from PMAY-G beneficiary households and other socio economically disadvantaged or vulnerable sections of society.
- The training duration spans 30 to 45 days and combines classroom instruction with on site practical exposure.
- Upon successful completion, participants receive nationally

Copy to the Director, SRLM, Telangana C)
copy to the CEO, SERP, Telangana
Copy to the AGM, Lead bank, SLBC, Telangana.
Copy to all District Collectors in the state.

C)

C)

Signed by vp GAUTHAM

)ate: 21-07-2025 00..05..3 4

Reason: Approved

O

O

Yours faithfully

21/07/2025 Director

Of Municipal Administration

TELANGANA HOUSING CORPORATION LIMITED, Hi NO.3-6-1 u, STREET Nö 1? HIMÅYÅTNÅGAR, HYDERABAD-29 From:

Sri.v.P, Gauthatfii PAS., All the Project Directors

Managing Dlrect:or tGHCL,

Lr no. 82836B / TGHCL-ENGG/7/2025- ENGINEERING SECTION

Sir,

Sub: TGHCL • Tilb•al Welfare Department - IJ riMzation of

Construction Units Concrete Mixing))S Reg. ((brEk Mikdngj Centerfngi and

)Sähå€töhéd by VAICOR in ITDÅ Areas -

Ref: Lr no. TRICOR / A3 / CTW/Ex Officio, MD, / 249 12022 Jated.21.06.2025 of

Mb) ***** tRtcÖk, Hyd,

Please find •ehelöSéd O topy„öf the reference cited,

Tetunganä SthédU1éd Tribes Cooperative Finance Corporation Ltd,

RICOR), Tribal Welfare Department (TWD), has sanctioned construction related units Viz. Brick Milking, Centering, and Concrete Mixfng Units

O established in ITDA areas. The details are as foltows:

O

No	ITDÅ	dfCönStrUCtion• MSMÉ urdts .			
		Bdc•k UhftS	ee'titeffrrg Uhf€	'Cdh&ete mixing unfu	Ydtat
	Bhadrachalam	4		6	11
2	Eturnagaram	6	6		18
3	tnær		4	6	10
		10	11	18	39

The district, Mandal and Village, wise details of the sanctioned units are annexed herewith.

C) In view of the •above, all Project Directors are hereby directed to utilize the C) services of these construction units set up in,.lTDÅ •areas-, as detailed •in the annexure. Further, Project Directors shall sensitdSe the sanctioned C) beneficiaries re'ga.rdln:g the utdl$ty of these uni and ensure o the {r engagement for proCurement of materials, centerin', and mix services for att% ongofhø dohStÄTdtton activities under the INDIRÅ}'WÅ •INDLU prognammea'hd report eompldance.

Yours faithfully

Encl* As •abgye

• G .bikECTOR copy to the CTW / MD, for informationa

C) Copy to the Project: of' ITDÅ> Bhadæhä'lam, Eturnagaram, Utnoor and Han-naut tortnformationand neceSSaö,[1] aet'lön C)

gned by VP GAUTHAM
: 21-07-2025 00:01:21
eason: Approved

// Attested //

Superintending Engineer (Schemes)

.30

0

TWD - TRICOR - ST MSME Scheme - List of construction related MSME units sanctioned in ITDA Areas

(Rs.In Lakhs)

ITDA	District	Mandal	Village	Name of the JLG	No. of Members	Name of the President & Contact number	Name of the Unit	Project Cost	Subsidy (60%)	Inst. Finance (30%)	JLG Contribution (10%)	Remarks
	Bhadradri kothegudem	Dummugudem	Lachigudem	Sri Sharanya	10	Sonde Arjun & 8919534246	Concrete Mixing unit	12.00	7.20	3.60	1.20	Grounded
	Mahaboobabad	Bayyaram	Ungogiri	Sri Anjaneya	8	V.Yamodha & 9676216110 / 9502865969	Brick Making unit	25.00	15.00	7.50	2.50	Grounded
	Bhadradri kothegudem	Mulakalapally	Pothagangaram	Sadhika	2	Erpa Karuna & 6309806420	Brick Making unit	25.00	15.00	7.50	2.50	Grounded
	Bhadradri kothegudem	Aswapuram	Palmulapalli	Komaram Bheem	4	Podduri Rama Krishna & 95025 27967	Centring Unit	18.00	10.80	5.40	1.80	Grounded
	Bhadradri kothegudem	Yellandu	Dhaniyalapadu	SS Centring	5	Sanapa Suguna & 6300928881 / 9704834790	Centring Unit	18.00	10.80	5.40	1.80	Grounded
Bhadrachalam	Bhadradri kothegudem	Cherla	Sothyanarayanapuram	Sravanthi	5	Ch. Narasimha Swamy & 9381063116	Centring Unit	25.00	15.00	7.50	2.50	Grounded
	Bhadradri kothegudem	Allapalli	Allapalli	Sri Dhanalaxmi	8	Vasam Srikanth & 8897629403	Brick Making unit	25.00	15.00	7.50	2.50	Grounded
	Mahabubabad	Garla	Narasimhagudem	Sammakka Saralka	4	M. Priyanka & 8790025958	Brick Making unit	25.00	15.00	7.50	2.50	Grounding under process
	Bhadradri kothegudem	Yellandu	Yellandu	Suroppa	4	Payam Radhamma & 9550923231	Brick Making unit	25.00	15.00	7.50	2.50	Grounding under process
	Bhadradri kothegudem	Dummugudem	Maralgudem	Durgadevani	5	Aplaka Veeraju & 6300702240 / 9849321360	Centring Unit	25.00	15.00	7.50	2.50	Grounding under process
	Bhadradri kothegudem	Dummagudem	Anjibaka	Muthyalamma	5	Uppa Kamala & 9182633724	Brick making unit	33.00	19.80	9.90	3.30	Grounding under process
			Sub Total		60			254.00	152.40	76.20	25.40	
	Mahabubabad	Kothagudu	Doravarivempalli	Telangana	9	Vijayakumar & 8332893830	Centring Unit	18.00	10.80	5.40	1.80	Grounded
	Mahabubabad	Kothagudu	Pogulapalli	Sanya	6	Suresh & 6302143740	Concrete Mixing unit (Ajax self loader)	37.50	22.50	11.25	3.75	Grounded
	Mahabubabad	Maripeda	Maripeda	Paramesha	10	Raju & 8074393028	Brick Making unit	33.00	19.80	9.90	3.30	Grounded
	Mahabubabad	Narasimhulapeta	Gokubodaktthanda	Harikamal	5	Nehru Naik & 9963123317	Centring Unit	39.50	23.70	11.85	3.95	Grounded
	Mahabubabad	Gudur	Mocharla	Sri Sri Sri Sammakka Saralamma	8	Mukarji & 9440189105	Brick Making unit	40.00	24.00	12.00	4.00	Under Process of Grounding
	Mahabubabad	Gangaram	Dubbagudem	Sri Musalamma	10	Shekar & 8500997397	Centring Unit	39.50	23.70	11.85	3.95	Grounded
	Mahabubabad	Gangaram	Punugondla	Pogiddaraju	10	Sampathi & 9494185539 4	Concrete Mixing unit	20.00	12.00	6.00	2.00	Under Process of Grounding
	Mulugu	Eturnagaram	AK Ghanpur	Kanakadurga	6	Raju & 7816048389	Brick Making unit	26.00	15.60	7.80	2.60	Grounded
umagaram	Mulugu	Govindaraopeta	Eppalagadda	Sammakka Saralamma	10	Surender & 9441660965	Concrete Mixing unit (Manhuat)	12.00	7.20	3.60	1.20	Grounded
	Mulugu	Venkatapur	Mallalahpalli	Ganapathi	10	Ganesh & 9963348191	Brick Making unit	33.00	19.80	9.90	3.30	Grounded
	Mulugu	Govindaraopeta	Moddulapalli	Sammakka Saralamma	8	Vijaya & 9502477847	Centring Unit	39.50	23.70	11.85	3.95	Grounded
	Mulugu	SS Tadvai	Ulagala	Sri Saralka	10	Vijay & 7801055084	Concrete Mixing unit	20.00	12.00	6.00	2.00	Under Process of Grounding
	Mulugu	SS Tadvai	Kodishala	Sri Sammakka	10	Venkanna & 9391401524	Centring Unit	39.50	23.70	11.85	3.95	Grounded
	Warangal	Khanapur	Mangalavaripeta	Gunjeedu Musalamma	10	Narasaiah & 9000139032	Centring Unit	25.00	15.00	7.50	2.50	Grounded
	Warangal	Khanapur	Mangalavaripeta	Sri Sammakka Saralka	5	Srinu & 9493993150	Brick Making unit	40.00	24.00	12.00	4.00	Under Process of Grounding
	JS Bhupalpally	Palimela	Modedu	Komarambheem	10	Suguna & 7382099353	Brick Making Unit	20.00	12.00	6.00	2.00	Under Process of Grounding
	JS Bhupalpally	Mahadevpur	Surarom	Laxmidevara	10	Suresh & 9133127582	Concrete Mixing unit	40.00	24.00	12.00	4.00	Under Process of Grounding
	JS Bhupalpally	Regonda	Chenchupalli	Surya	10	Bhagya & 9550607757	Concrete Mixing unit	40.00	24.00	12.00	4.00	Under Process of Grounding
			Sub Total		157			542.50	325.50	162.75	54.25	

JLG No.	ITDA	District	Mandal	Village	Name of the JLG	No. of Members	Name of the President & Contact number	Name of the Unit	Project Cost	Subsidy (60%)	Inst. Finance (30%)	JLG Contribution (10%)	Remarks
30	Utnoor	Adilabad	Narnoor	Bheempur	Sri Venkateshwara JLG	6	Jadhav Ramesh & 9951006808	Concrete Mixing unit	40.00	24.00	12.00	4.00	Grounded
31		Adilabad	Danthanpally	Utnoor	AMR Brick Making Unit	4	Pusam Daryavathi & 9908887740	Brick Making unit	20.00	12.00	6.00	2.00	Grounded
32		Adilabad	Maruthigudda, Utnoor(GP)	Utnoor	Sri Ganesh Brick Making Unit	4	Kodapa Sumalatha & 9908516179	Brick Making unit	40.00	24.00	12.00	4.00	grounding Under Process
33		KB Asifabad	Kumarambheem Asifabad	KB Asifabad	Shiva Shankar JLG	6	Vedma Bodu & 9346719782	Concrete Mixing unit	40.00	24.00	12.00	4.00	Grounded
34		KB Asifabad	Bheem Devara JLG	KB Asifabad	Bheem Devara JLG	9	Affram Srikanth & 6301492142	Brick Making unit	33.65	20.19	10.10	3.37	Grounded
35		KB Asifabad	Thyani	Dantanpalli	Brick (Concrete Block) Making Unit - Thyani KB Asifabad	6	Affram Mahadev & 8522076073	Brick Making unit	20.00	12.00	6.00	2.00	Grounded
36		Mancherial	Jaranam, Mancherial.	Indanpally, Jaranam, Mancherial.	Jai Sriram JLG	5	Rajeshwar Rao & 9963548061	Brick Making unit	33.65	20.19	10.10	3.37	Grounded
37		Mancherial	Dandepally	Dandepally	Chinnaiah Peddaiah Concrete mixer	4	Thota Ramadevi & 8790536510	Concrete Mixing unit (Ajax self loader).	40.00	24.00	12.00	4.00	Grounded
38		Nirmal	Gummena	Gummena, Pembi, Nirmal.	Brick Making unit, Gummena Shetpally	9	Affram Shesherao & 7075030528	Brick Making unit	20.00	12.00	6.00	2.00	grounding Under Process
39		Nirmal	Dilawarpur,Nirmal.	Dilawarpur,Nirmal	Sri Venkateshwara Concrete Mixing Unit	5	Thota Ramakanth & 8464854873	Concrete Mixing unit (Ajax self loader)	40.00	24.00	12.00	4.00	Grounded
			Sub Total			[illegible]			327.00	[illegible]	[illegible]	[illegible]	
			Grand Total			2753			1145.50	[illegible]	[illegible]	[illegible]	

CTW/Ex-Officio Managing Director
TG. S.T.C.F.C. Ltd., (TG TRICOR)
HYDERABAD

File No.TGHCL-ENGG/MATE/4/2024-ENGlNEERlNG SECTION

TELANGANA HOUSING CORPORATION LTD., .
H.NO.3-6-184, STREET NO.17, HIMAYATNAGAR, HYDERABAP„29

F rom
V. P. Gautham, I,A.S.,
Managing Director,

To
The District Collector,
All Districts

RC. No. T/0 Lr. RC. No.2304/TGHCL/E&P/INDIRAMMA INDLU/SAND/2024, 24/07/2025

Sir,

Sub . TGHCL INDIRAMMA INDLU - supply of sand to INDIRAMMA iNDLiJ Housing Programme - Regarding.

Ref, 1. T/0 Cr. RC. No.2304/TGHCL/E&P/lNDtRAMMA INDLV/SAND/2024, dt.22-12-2024.
2. Memo. No:. 1839/M1(1)/2025, Dt.01.05.2025 of the Industries And Commerce (Mines.l) Department.
3. Memo. No, 2691/M1(1)/2025, Dt.25.06.2025 C) of the fndustries And Commerce (Mines.) Department.

(3

C) Vide reference ref, 3 rd cited, the Prl. Secretary to Go.vernment & Secretary to Govt (M&G) has issued guidejines to all the District Collectors, to mandatorily onboard to Sand Taxi app.

C) It is notjced that sand is. being. supplied at exorbitant prices by local transporters. Artificial shortages are being created by imposing hurdles for
transport of sand across assembly constituencies and across districts, C)

For an tndjramma indlu berfeficiary of one mandal, indent is being

C) issued by the AE(H)/MPDO of that mandal whereas sand token ts to be issued by tahsildar ofthe sand-bearing mandal It is very difficult for the C) beneficiary to shuttle across mandals and coordinate with different offices

to get sand.

DISPATCH CLERK

C) DATE: 26 07 2025

rnelYO. I tor-lUL-tNGGlMATE14/2024-ENGlNEERlNG SECTION

To resolve this problem, it is being proposed to integrate sand taxi

C)

with Indiramma indlu app to generate automatic indent at the time of grounding. This witl also prevent misuse of sand tol<ens. However, mining department has indicated that many districts have hot yet onboarded to sand taxi app.

C)

Therefore, it is requested to take necessary action to use Sand Taxi for supply of Sand for construction of houses under "INDIRAMMA 'NDLU 'I oh Zero seignorage basis, to resolve inter-rnandal, inter-constituency and inter-district sand issue

Éhci: ref 3 rd cited.

Vp Gautham

#ApprovedByDesignation#

○

O

// Attested //
Executive Engineer

CD

C)

C)

C)

ned by VP GAUTHAM •e: 24-07-2025 15:44:16ason: Approved O

TELANGANA HOUSING CORPORATION LIMITED, HYDERABAD

H,No.3-6-184. Street No. 17, Urdugally, Himayathnagar, Hyderabad-29.

CIRCULAR

Circular No.1116/TGHCL/E&P/1NDIRAMMA INDLU/2024, Dt. 26.07.2025

Sub: INDIRAMMA INDLU- Clearing pendency at each stage of construction - Instructions to Expedite - Reg

Ref: 1. G.O.Ms,No.7, TR&B (RH&C.AI) Dept. / dt: 09.03.2024

2. G.O.Rt.No.259, TR&B Dept., dt: 03.06.2025

3 Progress Report on Stage-wise Pendency as on 26107.2025

The analysis of the stage-wise pendency report indicates substantial

C) bottlenecks in clearance at Basement, Wailing, and Roof stages, particularly at AE and DEE levels in several districts. Timely movement between stages is essential to enable the next tranche of payments and maintain construction pace.

- High Pendency Districts (Top 5 by Total Pending):

1. Na}gonda – 1454 cases
2 Rangareddy – 1104 cases
3. Mahabubabad – 1052 cases
4. Waranga} – 793 cases
5. Nagarkurnool – 730 cases

C)

- Basement Level Backlogs:
  - AE-level pendency is highest in Rangareddy (782) and Nalgonda (523),
  - DEE and PD pendency is also a concern in districts like Warangal, Mahabubabad/ and Nagarkurnool.

C)

Accordingly, the following •instructions are issued to ali Project Directors (Housing):

1. Daily Monitoring of AES and DEEs:
   Conduct mandal-wise reviews and instruct AEs/DEEs with high pendency . to clear files within 48 urs,
2. Escalation Matrix:
   Ca.ses pending for more than 5 days at any level must be auto-escalated to PD login and reviewed for appropriate>intervention.
3. Zero Pendency Mandal Drive:
   Launch a special campaign in each district to achieve "Zero Pendency" by 31st July 2025.
4. Check AE-wise Outliers:
   Identify AES with over 50 pendencies and issue notices through DEEs.
5. Finish Stage Focus:
   Districts nearing roof cast should prioritize completion and disbursal at finishing stage to demonstrate tangible progress. C)
6. Daily Progress Review:
   All PDS Shali review stage-wise pendency clearance status by 6 PM every day .

On-Ground Support:

Facilitate support to AEs/DEEs struggling with work overload in mandais with rapid progress, by rationalising staff based on houses progress.

Non-compliance and consistent pendency wili be viewed seriously and reflected in the performance review of field functionaries. PDS are requested to act proactively and clear pendencies well before the end of the month.

C)

Sd/- 26.07.2025
MANAGING DIRECTOR

To:
All the Project Directors (Housing), Telangana
Copy to: Al) the District Collectors for information and follow up

//Attested//
Chief Engineer

CD

O

GOVERNMENT OF TELANGANA ABSTRACT

T (R&B (Housing) Department Indiramma 5ncl\u Sc.hcrne - Sanction of 500additional houses to the STS in Agency areas of Sirpur AC Sanction Accorded - Orders - Issued

TRANSPORT, ROADS & BUILDINGS (RH&C.AI) DEPARTMENT

G.O.Rt.No.359 Dt:31.07.2025.

Reaql the follo-Ei-n-g:

(7 1. G.O.Rt.No.252, (Housing) Department, dc: 28.05.2025.
2. From the M.D., TSHCC, Hyderabad, & No. 1 1 16/E&P/ Indiramma Ind)u/2023, Dated 26.07.2025.

ORDER:

In the circumstances reported by the Managing Director, Telanganö Housing Corporation Limited, Hyderabad in his letter 2 nd read above, and after careful examination of the matter, Government hereby accord sanction for 500 additional houses under Indiramma Indiu Scheme to the STS In Agency areas in Sirpur-T Constituency, duly adjusting from the left over C)PVT G houses in the Komuram Bheem Asifabad Distrlct wlthin the Stale

Reserve Quota allocated to the district In the G.O l ' read above.

C) 2 . The Managing Director, Telangano Hous\nc:) Corporation Limited, Hyderabad shall tal<e further nec.essary action In the nnatter.

(BY ORDER AND IN THE NAME OF HE GOVERNOR or: TELANGANA)

VP GAUTHAM

SECRETARY TO GOVERNMENT(FAC)

C)

To

The Managing Director,

Telangana Housing Corporation Limited, Hyderabad Copy to

The District Collector, Komuram Bheem Asifabad & P.O.,

CD ITDA, Utnoor

The PS to Hon'ble M (Housing).

The PS to Secretary to Government.

//FORWARDED BY ORDER //

C) S€CTION OFF CER

TELANGANA STATE HOUSING CORPORATION LIMITED

H.No. 3Æ-184, Street No. 17, Himayatnagar, Hyderabad — 500029

CIRCULAR No.1116 GHCL INDIRAMMA INDLU 2025 Date: 26.07.2025.

Sub: Indiramma Indlu — Urgent completion of Awaas App Data Entry by 28th July 2025 — Instructions Issued — Regarding,

Ref: 1. G.O.Ms.N0,7, TR&B (RH&C.AI) Department, Dt: 09.032024
2, Govt. Memo No.6375/RH&C.A1/2024, Dt: 12812.2024
3. Minutes of the VC by Minister (Housing) and CS on 22/07/25

It has come to the notice of the undersigned that several districts are lagging in completing the data entry of verified beneficiaries into the Awaas App, which is essential for C leveraging central assistance under PMAY-G. The deadline for completion of data entry is 28th July 2025, as per Government of India guidelines.

The Chief Secretary to Government has expressed serious concern over the delay and

O instructed that the same be rectified immediately, failing which Te!angana's eligibility for central funds could be jeopardized. C)

In view of the above, the following instructions are issued:

1. All District Collectors shatl ensure that 100% of eligible and verified Indiramma Indiu beneficiaries are uploaded into the Awaas App by 28.07.2025 without fail.
2. MPDOs/MCs shall be directed to dep00y additional teams and coordinate with field functionaries to accelerate the entry process.
3. District Collectors shall.review mandal-wise status twice daily and intervene wherever required.
4. A daily progress report in the prescribed format shall be submitted to TGHCL Headquarters by 7:00 PM on 26th, 27th, and 28th July 2025.

Timely and complete data entry into the Awaas App is critical to secure our share of PMAY-G sanctions and to fulfii the housing guarantee given to eligible citizens. NonC) compliance wilt be viewed seriously.

C) Sd/-26.7.2025
Managing Director

Enclosure: Awaas survey status- district wise report
Copy to All District Collectors in the State
Copy to the Commissioner, GHMC / All PDs(Housing) / Ali MCs & MPDOs

C) //Attested//

Chief Engineer
26/7/25

C)

Scanned with OKEN Scanne

PMAY-G SURVEY STATUS REPORT AS ON 25-07-2025

	Distrtct	Total No Mandats	f Total No of GPs	No. of GPs survayed	Housog sanctloned under Indlrammo	No of boncflcforløg gurveyed	% gurveyed
	TOTAL	569	12810	7741	262582	111760	42.50
1	Rangareddy	21	526	267	12434	2620	21.11
2	Jagitia(	20	385	242	9611	2161	22.48
3	Vikarabad	20	594	247	9662	2220	22.98
4	Warangal	11	317	189	5211	1641	31,49
5	'jayashankar Bhupalapally	12	248	53	3407	1145	33.61
6	Sangareddy	26	631	483	12221	4199	34.36
7	Nirma(	18	400	122	7712	2824	36.62
8	Narayanpet	13	272	183	4825	1793	37.16
9	Adilabad	20	473	379	11511	4313	37.47
10	Bhadradri Kothagudem	22	471	401	13107	4924	37.57
11	Karimnagar	15	318	243	7358	2827	38.42
12	Yadadri Bhuvanagiri	17	427	277	7940	3069	38.65
13	Mahabubnagar	16	423	378	8232	3241	39.37
14	Mancherial	16	306	53	8217	3302	40.18
15	Jangoan	12	280		5109	2067	40.46
16	Nalgonda	33	868	620	16422	6806	41,44
17	Medak	21	492	259	8294	3446	41,55
18	Suryapet	23	486	169	6653	2780	41.79
19	Jogulamba Gadwal	13	255	255	5638	2427	43.05
20	Nizamabad	31	545	485	14299	6221	43.51
21	Rajanna Sjrcilta	12	260	156	6560	3076	46.89
22	Kumurarn Bheem Asifabad	15	335	258	5727	2727	47.62
23	Siddipet	26	508	437	11249	5437	48.33
24	Nagarkurnool	20	460	300	8371	4406	52.63
25	Wanaparthy	15	268	222	4 897	2668	54.48
26	Medchal	3	33	28	592	331	55,91
27	Hanumakonda	12	210	135	4902	2743	55.96
28	Khammam	20	571	379	13013	7507	57.69
29	Peddapafli	13	263	168	5547	3256	58.70

30	Mahabubabad	18	482	133	8442	5149	60.99
31	Mulugu	10	171	164	4611	2957	64,13
32	Kamåreddy	25	532	56	10808	7471	69.12

Scanned With OKEN Scan

FiJe No TGHCL-ADMN/GENC/8/2025-ADMINISTRATION SECTION

TELANGANA HOUSING CORPORA TION LIMITED

H.No.3-6-209, Urdugally, Street No. 1 7, Himayathnagar, HYDERABAD-500029

General Manager(Admn), TGHCL,
Hyderabad.

Rc,N0.A1/S08116/GcnL/202$. Dated: 2706/2025

CIR C ULA R

Sub:	TGHCL, Hyd - Certain general instruction issued for following Office procedures/rules while conununicating instructions to the District Collectors with the approval/notice f the MD., TGHCL - Reg,
Ref:-	1) This Office Circular Non 1/808176/Gen1/2025, dt:15.5.2025.)lnstructions of the MD., TGHCL, dt:22.6.2025.

(7

Through the reference 1 ft cited, circular instructions have been issued to all Staff of TGHCL, Head Office not to communicate any letter/inscruccions/inforlmation to the District Collectors without approval/nolice Ofche Managing Director, TGHCL,

It is regretted to note that, despite of clear instructions, the Head Office Staff have cornmunicated letcers/orders/information directly to the District Collectors without notice/ approval of the Managing Director, TGHCL, As such, the Managing Director, TGHCL has viewed very seriously and directed to issue Office Order/Circular on the following:-

C)

1	ny Draft approved and e-Signed on e-Office shall be downloaded as such and attested, so that any changes carried out on the draft before approval are not missed Enclosexample.
	ny communication directly addressed Co Collectors shall only with the express approval J' Che Managing Director only.

C)

Therefore, all Wings Heads of TGIICL, Senior Officers and Staff are hereby informed co follow the above instructions strictly. Any deviations will be viewed seriously.

e The example/model of draft lecter placed in e-Office/approved by the MD with corrections/ cornmunica ted to the concerned are enclosed herewith for reference.

Encl:(As above)

B MAMATHA, GGENERAL MANAGER (ADMN) TGHCL, ADMINISTRA TION SECTION, 0/0 7'GHCL

General Manager(Admn),

T'GHCL, Ilyderabad.

To

All Staffof TGHCL, Head Office.

Copy to all Senior Officers of TGHCL, Head Office for information and necessary action. ....Copy (Q st

File:

;igned by B Mamatha,
)ate: 27-06-2025 16:36:26
?eason: Approved

Draft letter Submitted to MD.

TELANGANA HOUSING CORPORATION LIMITED

H. No. 3-6-1 84, Urdugalfy, Street No. 1 7, Himayathnagar, HYDERABAD-500029,

V.i .uautham I.A.S.
/v\anapinq Director

Thc Commissioner,
Panchayalh Raj &
Rural Developrnenl Dept!.
HYDERABAD.

Da ted• #ApproveDate#

Rc.. / 803020/2025.

Sub • TCHCCI Hyd Estt Shortall of Non Techic.al Staff in the cadre of Asst.Manager(Supdt)/Sr.Assistant Request for providing Staff of PR Deptt on deputation basis for a period of (1) Year under rS ternns Conditions Reg.

Ref: 1)Representation of President, Telangana Mandal Panchayat Officers Assoc iation C) (EOPR&RD) Centrzl Unit, Hyderabad, 6.2025.

i invite kind attention to the subjec.t and refereflces (iled.

It is to subnnit that, vide reference the President. Telangana Mandal Panchayal Officer Association(EOPR&RD).Central l)tnit, Hyderabad have represented ac)d stated Chat cor ˈua !f') Mandat Pa;nchayal Officers were appointed during the yea! 201 9 t(.) and I hey haydeted 4 to 6 years setvice. Duc 10 PR Department have notified (% 26) pc:sts . MPDO to IGPSC for recruitment through Group-li services as such, there al e nearly (50) dt•e getting effected with reversion to their feeder category i . e . , Panchayal Secretary/ Sr. Assistant after

C) jendering to 6 years services. Further stated that, they are wilting to work in -rGHCl.. cn deputation basis to

work in any post which is equivalent t.o the post or MPD And requoqt f or

C) consent letter to the Cornrnissloner, PR & RD Depart

C) in this, regard i! is to submit that. as on the date. the following No.of oosts are vac

C) . IGHCL Iri the of Manager/Åssistant Manager/ Sr . Asqistant.

Scale Pay of the

St No.	Cadre/ Post	POSI	No.o(Posts Sanctioned	No.of o.or working	No .01 Vacancies

C)6

C)

		In RPS, 2020			
1	2	3			
1	Manager	Rs.51320-127310/-	1 5	1 3	2
2	Assistant Manager	Rs.42300-115270/-			
3	Sr.Assistant	Rs.32810-96890/-	58	10	
			85	6	79

In view of the above it is requested to spare the services of MPOs on deputatiori basis ' Inder F.S Tevms Conditions for a Deriod of (i f year so. as to utilize ther services in r GHCI against post of Assistant Manager cadre In PD{H) Offices various Districts and in Head Office.

Yours faithfully , HApprovedBYIJ

Encl: (copy of reference)

Managing Director.

TGHCL, Hyderabac.

0

0

File No. 7 GHCL-ADMN/DPTS/5/2025-ADMINISTRA TION SECTION

(2) Draft approved MOM&Office.

TELANGANA HOUSING CORPORATION LIMITED

H.No.3-6-184,Urdugally, Street No. 17, Himayathnagar, HYDERABAD.

500029

.[o

V P Gai-'tnarn ! S.
Managung t)treclot•

The Corn nmss(oner.
Pa !ocnavathrag RuralDevelopment
ment.HYDERABAD

Rc.No.A1/803020/2025

Dated 09/06/2023.

Sub TGHCL, Hyd - Estt - Shortfall of Assl Manager(Supdt)/ Sr.As of Non - Techntcai Staff in the cadre Assl Sr.Asslst•anC Request for provid Staff o! PR Deptt.. on deputation oasis foc a cf (l) Year under FS & Conditions Reg.

C))Rerjresentalion of President, Te\angana Mandal Par.choynt Officer CentralUnit Hyderabad, dt 9 6.2025

I invite kind attention to the subject a...rote re n c. cit e 'o

Vide reference c:ted I-he President, •I eianqana Ma Panchaya: O ... ration(E OPR&R i.)) (-enl rai n It I-dyaerabac have reoresented that Mandal Panchayat Officers were apooint•ed du the year > 0 ¹J 9 ' a 202) and they have c.onnplel.ed a to 6 years servi('-c Due Co PR C)eoarlnnep.t notified 26) posts of MPC) ᶜI G: P SC- fo recruit s such. are nearly (30) MPOs ace get lung ei(ec-teo 1 everslor (eeciec cotegory ! -e Patnchayat Secretary/ Sr.As;sislanl years services u {"tin I-hat. they c)' e will: ng work depulöi.lon r,asts to work a posi which IS equtvaien! [c Ine post

••equesl (or ',ssulng coru;enl letter co line PR (S (RD Depart

C) As on date, the following vacancies are available in TGHCL under Non Technical category in the cadre of Assistant Manager

C)

Sl. No.	Cadre/Post	Scale of Pay of the Post In RPS, 2020	No.of Posts Sanctioned	No.of Working	No.of Vacancies
1	2	3	4	5	6
	Assistant Manager	Rs.42300-115270/	58	10	48

C)

C)

C)

C)

With respect to the above representation, TGHCL expresses consent to take MPOs in the available vacancies in Assistant Manager cadre, in PD(RD) offices in various districts and in head office, on deputation basis, with Foreign service terms and conditions

Correction mD Sir.

323

Yours faithfully
VP GAUTHAM, MANAGING DIRECTOR-TGHCL, MANAGING DIRECTOR O/O TGHCL
Managing Director
Manag•o

tile No. I GHCL-ADMN/DP S/5/2025-ADMINISTRA ! ION sec I ION

Draft approved
office.

TGHCL, Hyderabad

Copy to Telangana MPO's association.
Copy subnmtted to Secretary to govt., Housing
to Secretary to govt., PR&RD

Copy Sl.lbmtl•tea

honed. by VP GAUTHAM
Date: 09-06-2025 19:36:17keeson. Approveo

After approval - Communicated by attestation -

TELANGANA HOUSING CORPORATION LIMITED

H,No. 3-6-1 84 , Urdugallyj Street No. i 7, Himayathrtagar. HYDERABAD-500029

V C: .GauEhä\lTh i A S
Managing Director.

The Commissioner,
Panchayathraj & Rural Development
Department. HYDERABAD.

Rc.No.A1/ I 803020:'2025. Dated.9 ... 6.2025.

Sub TC.JHCL, Hyd rs,tt Shortfall of Non-Technical Staff in the cadre of Ass?. Manager(Supdt)/Sr Assistant Request for oroviding Staff of PR Deptt. deputation basis for a period of (1) Year undet FS Terms & Conditions - Reg.

Ref Representat ion President, Telangana Mandal Panc.. hayat Officers Association (EOPR&RD) Cenu a(IJnit., Hyderabad, 2025.

C)

I invite kinc'! attention to t.he subject and references c.ited.

CD Vide reference cited. Presidenl. Telangana Mandal Panchayat Officers Assocnalion C) (EOPR&RD). unit , Hyderabad have represented and stated chat, certain Mandal

Panchayal Of tic.ers were appointed during the year 2019 1-0 202 1 and they have completed (o 6 years service Due to PR Departnnent have notified (1 26) posts of MPOs to TGPrecrui t.rnent I h iTh_jgh services as such- (here are ftearly. (50) t'v\POs ace get tin e.' ef f cc•'. n with reversion la their fe€poer categor i ! i e. , Panchayat Secretary/ Sl Assistanl after rendev ing 4 to 6 vices. FUI so leci t hat they ace will) Ing to vvock FGHC,I on dep c basis to work any {s cautvalent ID line POSI.c:. MPÖ and request for Issuing c.onqe: lecr.er 1.0 lhe C.orvuni.ssioner PR d RD Departtnenl.

As on dale, (lie lowing •vacancies are available in T CJHCI unäer Non-Te

C) categofN In the c ad: Q of Assistant Manag

Sl. No.	Cadre/Post	Scale of Pay of the Post in RPS, 2020	No.of Posts Sanctioned	No.of Working	No.of Vacancies
1	2	3	4	5	6
1	Assistant Manager	Rs.42300-115270/-	58	10	48

With respect to the above representation. TGHCL expresses consenl to take MPOs the available vacancies in Assistant .,qanager cadre, in PD(H) Offices in valious Districts and In i-fead C) 4 Office, on deputation basis, with Foreign Service Terms and Conditions.

Office, on deputat

C)You f s (ai lh f utty,

Sci/ • C)

Manaoino DirectoTGHCL. Hyderasutjrrii,tceci to the Secretary to Government, Housing Deparltnent. Copy suV$iXteci to the Secretary to Government, PR&RD Department.

Copy submitted to
Copy submitted to
Copy to Telangana

MPO's Association.

'l/\cte.sted"

22 g , C.) enel

Marlfi$(Admn).

TGHCLI Hyderabad.

0

C)