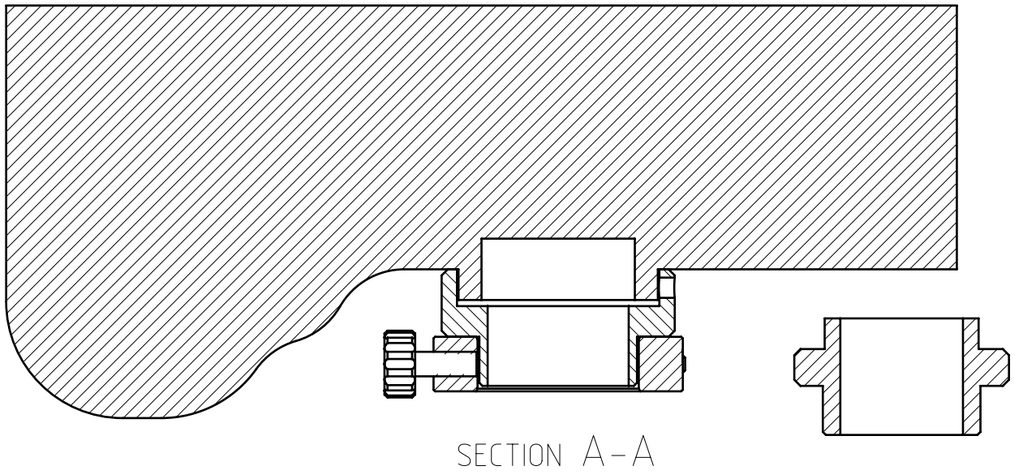

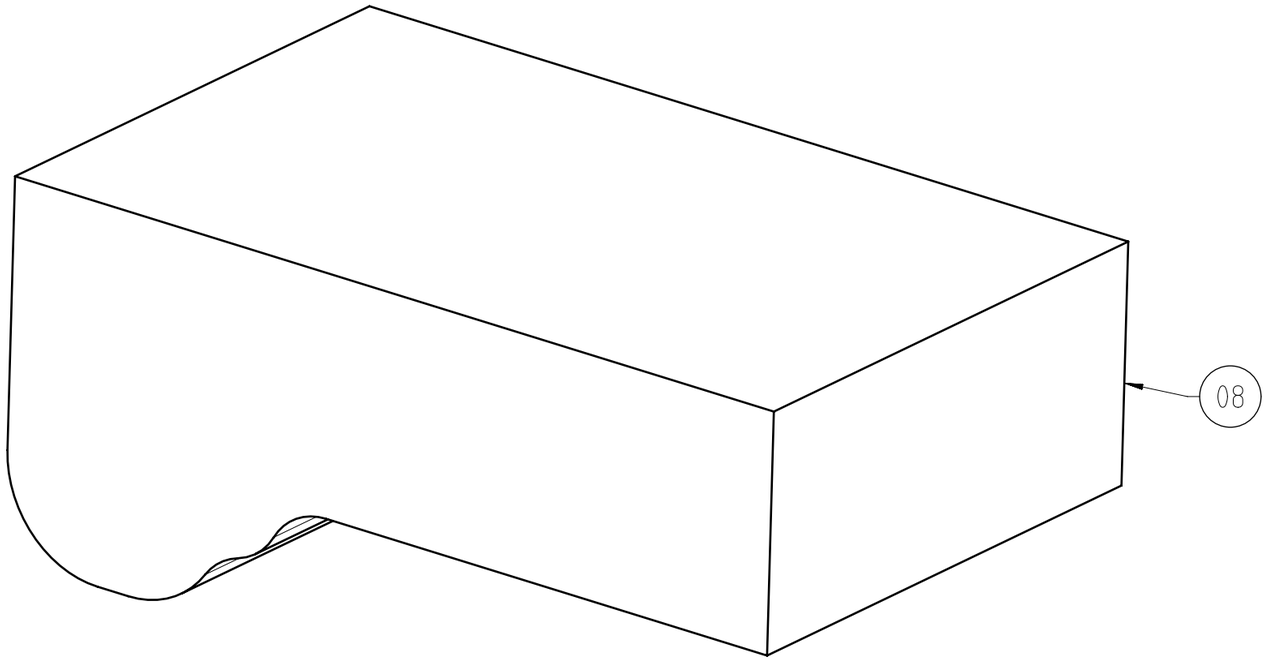

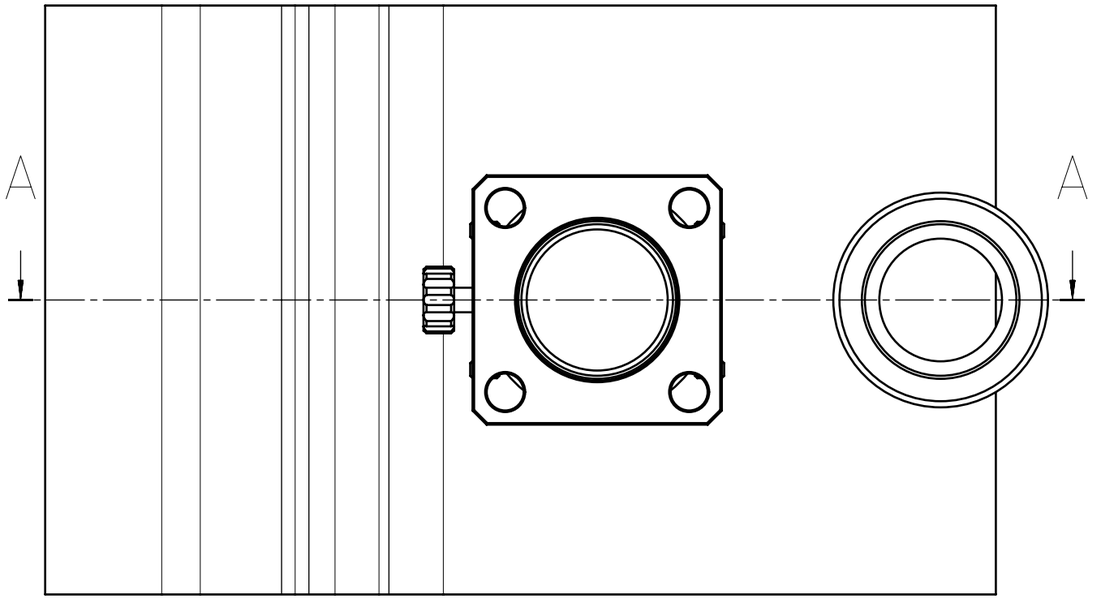

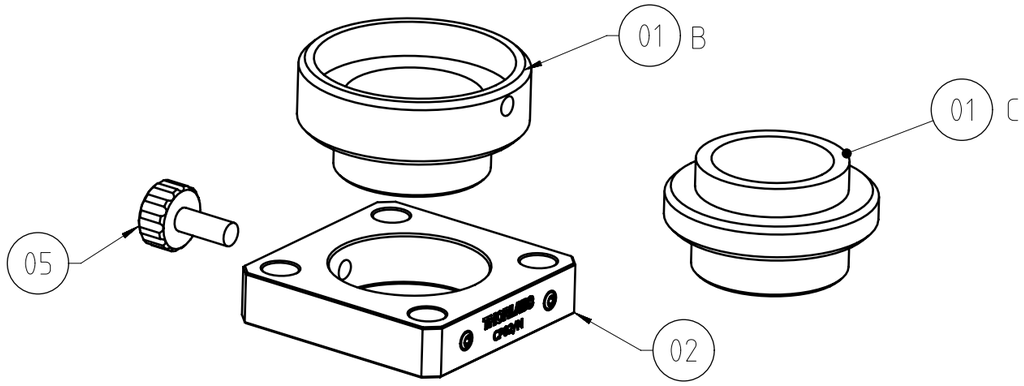

Item	Qty	Partname	Material	Partnumber/Remarks
08	1	Camera Chronos 2-1HD	-	-
07	1	Camera Teledyne Moment	-	-
05	1	sterschroef	RVS	-
02	1	Cage plate CP02-M	-	Thorlabs
01	2	cameraholder	PLA	3D Print

Physics of Cellular Interactions

00 Varia-Rotating camera mount

	Date	Name
DRN	20-09-2021	I. Cerjak
PRD	01-01-1970	I. Cerjak

scale: 1:1

0 XX X

Dim.in mm

General tolerances unless otherwise specified ISO-2768-fH-E

Geometrical tolerances unless otherwise specified ISO-8015-E

Surface roughness of machined surfaces unless otherwise specified 3,2 Ra (maximum standard) 1,6 Ra (fitting typical)

AMOLF

Size A3

Partnumber: CELIN-00-06-00B

Number of sheets: 1 of 1

This drawing may not be used for commercial purposes without written authorisation