REVISIONS				
ZONE	REV.	DESCRIPTION	DATE	APPROVED
A2, B1, B2	A	UPDATED PRECISION OF DIMS DIA .500 AND DIA 2.750, WAS TO TWO DECIMAL PLACES. MADE 1.41 DIM REF.	4/24/2022	MAVB

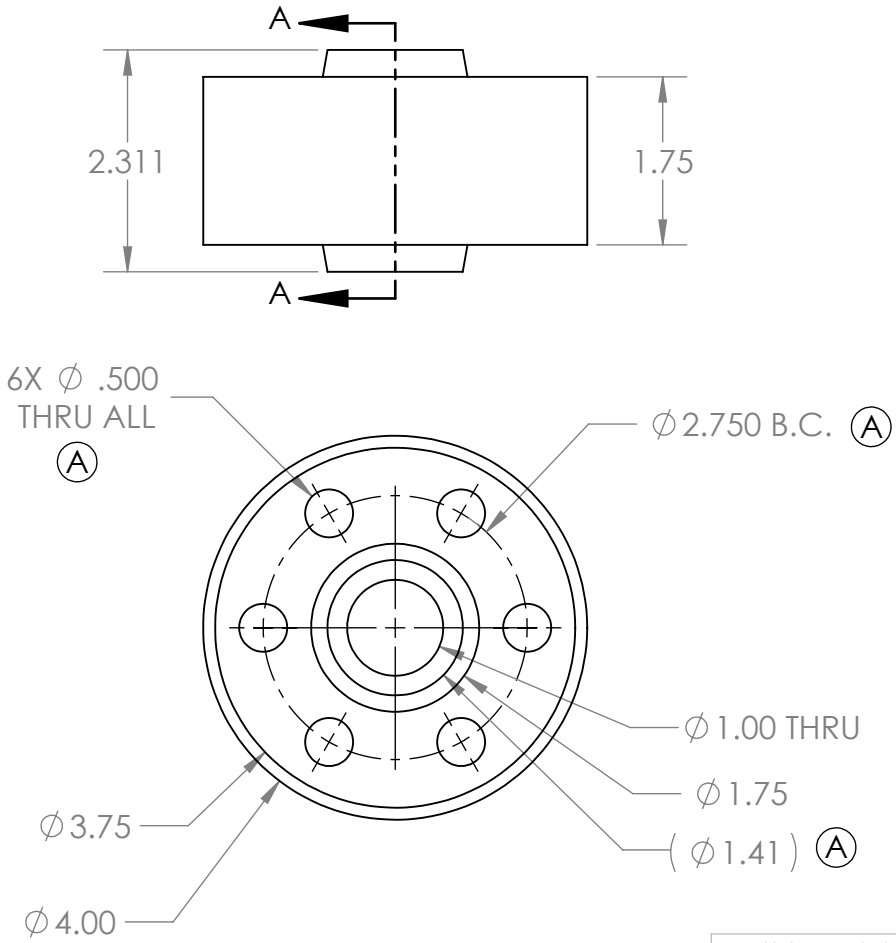

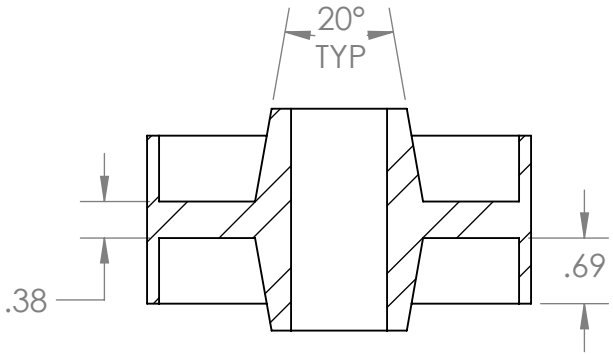

SECTION A-A

UNLESS OTHERWISE SPECIFIED:		NAME	DATE
DIMENSIONS ARE IN INCHES TOLERANCES: FRACTIONAL ±1/16 ANGULAR: MACH ±.5 BEND ±1 TWO PLACE DECIMAL ±.03 THREE PLACE DECIMAL ±.010	DRAWN	AG	4/24/22
	CHECKED		
	ENG APPR.		
	MFG APPR.		
INTERPRET GEOMETRIC TOLERANCING PER: ANSI Y14.5	Q.A.		
MATERIAL Plain Carbon Steel	COMMENTS:		
FINISH NONE			
DO NOT SCALE DRAWING			

CHAFFEY COLLEGE

TITLE:

WHEEL

SIZE	DWG. NO.	REV
A	DRFT21-21C	A

SCALE: 1:2 | WEIGHT: 2.366 | SHEET 1 OF 1

PROPRIETARY AND CONFIDENTIAL

THE INFORMATION CONTAINED IN THIS DRAWING IS THE SOLE PROPERTY OF CHAFFE COLLEGE. ANY REPRODUCTION IN PART OR AS A WHOLE WITHOUT THE WRITTEN PERMISSION OF CHAFFEY COLLEGE IS PROHIBITED.

NEXT ASSY	USED ON
APPLICATION	

SOLIDWORKS Educational Product. For Instructional Use Only.