LF-FSD075YF

Non-isolated NFC Programmable DALI-2+DT8 Dimmable LED Driver

Product family features

— DALI&PUSH dimmable

— Dims to off without afterglow

— Supports 2 sets of light fixtures connected in series

— Standby power consumption≤0.3W

— Suitable for Class I light fixtures

— 5 years guarantee

— Lifetime up to 100,000h

Product family benefits

— Advanced functions: EL, CorridorDIM, CLO

— DALI-2 part ext. 251, 252 and 253

— Output current and parameters adjustable via DALI programmer or NFC

— 21mm height, 0° /45° push terminals optional, can achieve automation

— According to Zhaga Book13, 24, 25

— Multiple modes available: 1 channel DT8, 1 channel DT6, 2 channels DT6

— Surge level: PUSH: 1kV; L-N: 2kV; L/N-PE: 4kV

Typical applications

— For linear light and tri-proof light

— For office, commercial and decorative lighting

Product parameters

— Output current 125-900mA

— Output power 30-75W

— Input voltage 198–264Vac

— Output voltage 54-240Vdc

— Efficiency 93%

Electrical data

Input data

Rated input voltage	220 ... 240V
AC voltage range	198 ... 264V
Mains frequency	0/50/60Hz
Input voltage DC	176 ... 280V
Power factor	≥0.97
Efficiency in max. power	≥93%
THD	<10%
Input current	0.45A Max @AC input 0.14-0.37A @DC input
Inrush current	40A[1)]
Loading number on circuit breaker 10 A (B)	13
Loading number on circuit breaker 10 A (C)	22
Loading number on circuit breaker 16 A (B)	35
Loading number on circuit breaker 16 A (C)	35
Protective conductor current	<3.5mA
Stand-by power consumption	≤0.3W

Output data

Nominal output voltage	54... 240V
Nominal output current	125...900mA
Default output current	125mA
Current setting	NFC/Lifud programmer
Maximum output power	75W
Nominal output power	30 ... 75W
Output ripple current (100 Hz)	±3.3 %
Flicker	According to IEEE Std 1789-2015
CIE SVM	≤0.4
IEC-Pst	≤1
Output current tolerance	±5%
Temperature tolerance	±10%
AC start-up time	<1.2S
DC start-up time	<0.8S
AC/DC switch time	<0.8S

Safety

Withstanding voltage	I/P-PE, O/P-PE, I/P-DA1/DA2, O/P-DA1/DA2, DA1/DA2-PE: 1.5kV&5mA&60S
Surge capability (L-N)	2kV
Surge capability (L/N-PE)	4kV
PUSH[2)]	1kV
Insulation resistance	I/P-PE, O/P-PE, I/P-DA1/DA2, O/P-DA1/DA2, DA1/DA2-PE: >100MΩ@500VDC

Lifetime	Up to 100,000 hours[3)]
Guarantee	5 years[4)]

1) t =250μs
2) The surge test wiring at the PUSH terminal is connected in parallel with L-N
3) For details, please refer to the service life table
4) 5 years@Tc≤80℃

Characteristic diagrams

Operating Window

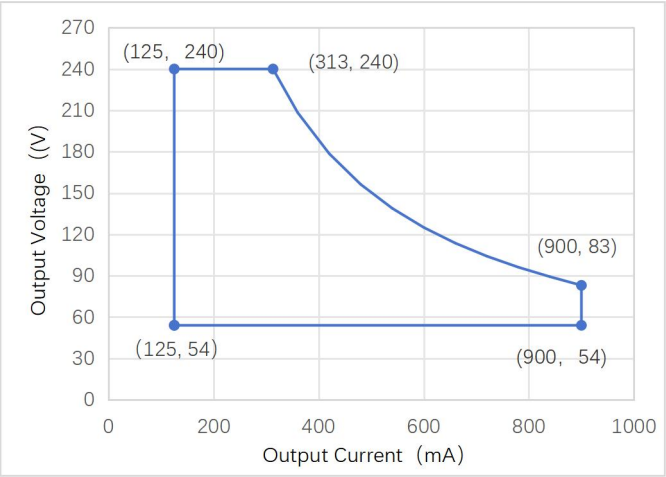

Typical Efficiency vs Load

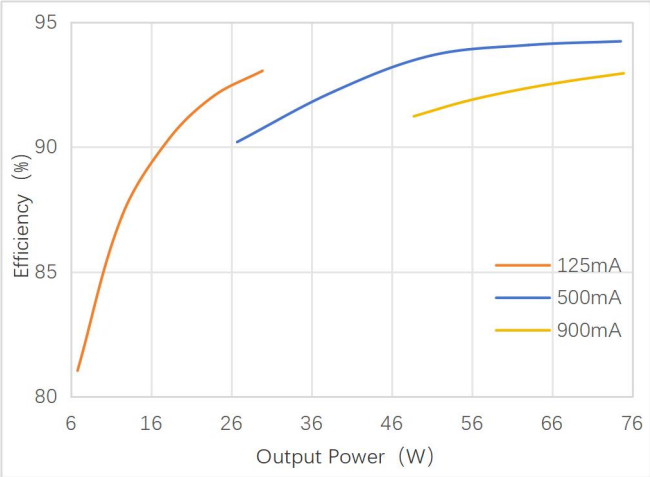

Typical Power Factor vs Load

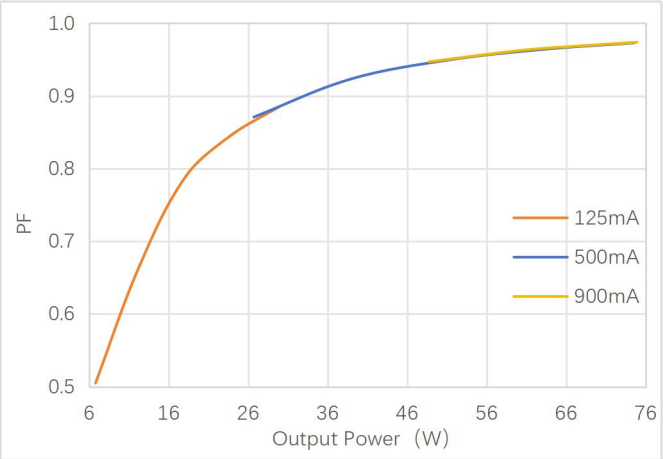

Typical THD vs Load

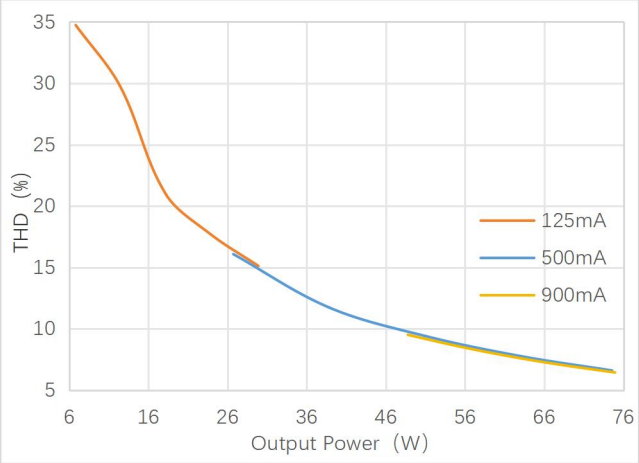

Lifespan

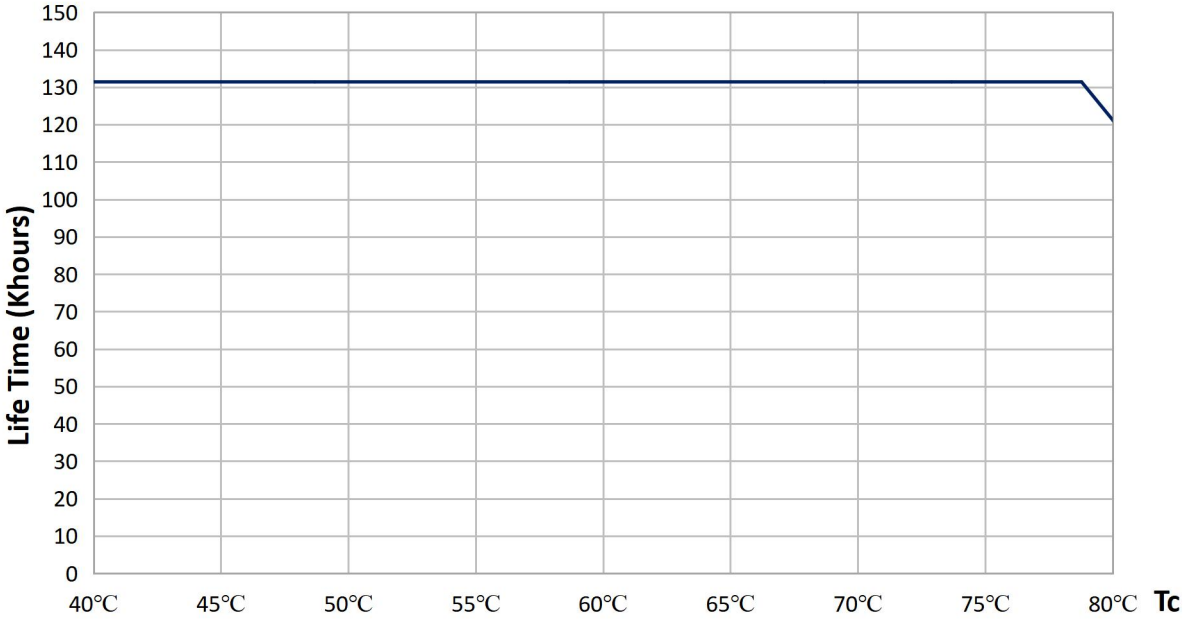

Service life

Model	Iout	Pout	Ta	50°C	60°C
LF-FSD075YF	900mA	75W	Tc	70°C	80°C
			Lifetime	>100,000h	>50,000h

Note: The design life of the LED driver is as described above under reference conditions. The failure probability is less than 10%.

The relationship between Tc and Ta also depends on the design of the luminaire.

Dimensions

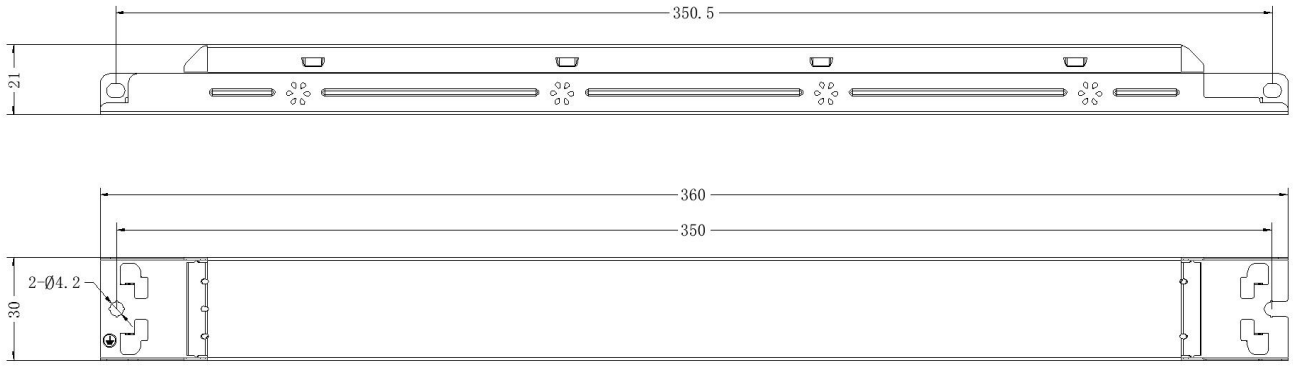

Mounting hole spacing, length	350±0.2mm
Product weight	270g
Cable cross-section, input side	0.5 ... 1.5 mm²
Cable cross-section, output side	0.5 ... 1.5 mm²

Wire preparation length, input side	7 ... 8mm
Wire preparation length, output side	7 ... 8mm
Length	360±0.2mm
Width	30±0.2mm
Height	21±0.2mm

Colors & materials

Casing material	Color coated sheet
Casing color	White

Temperature & operating conditions

Ambient temperature range	-30℃ - +60℃
Maximum temperature at tc test point	80℃
Temperature range at storage	-30℃ - +80℃ (6 months in Class I environment)
Humidity range at storage	20-75%RH (no condensation)
Humidity during operation	20-95%RH (no condensation)
Atmospheric pressure	86-106KPa
RoHS	RoHS 2.0 (EU) 2015/863

Tc test point

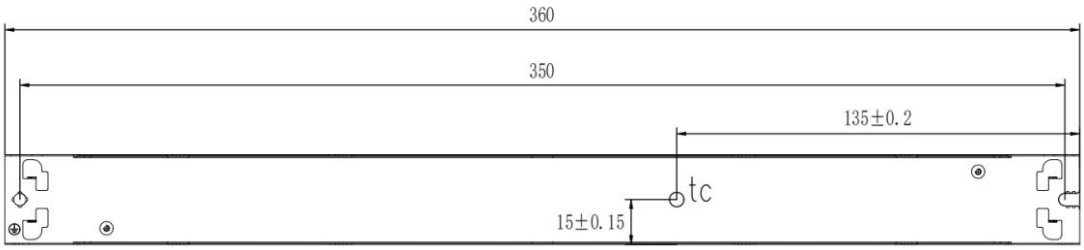

Tc point is at the top of LED driver

Product terminal

Input		Output	
AC-L (Grey)	AC live wire input	**CH2+ WW+ (Red)**	Warm white positive terminal output of LED driver
AC-N (Grey)	AC neutral wire input	**CH2- WW- (Black)**	Warm white negative terminal output of LED driver
/	/	**CH1+ CW+ (Red)**	Cool white positive terminal output of LED driver
⏚ **(Grey)**	Earth wire input	**CH1- CW- (Black)**	Cool white negative terminal output of LED driver

DA1 PUSH (Green)	DALI1/PUSH dimming input	/	/
DA2 PUSH (Green)	DALI2/PUSH dimming input	/	/

Wiring diagrams of output terminal

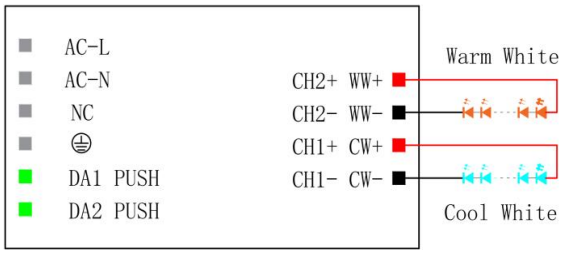

Wiring diagram of dual-color light fixture

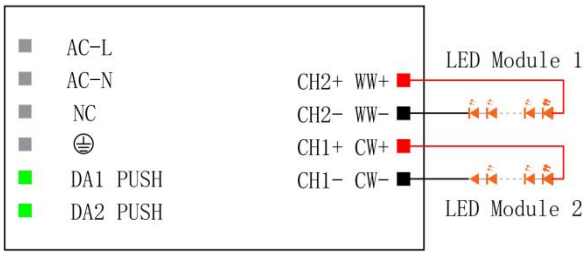

Wiring diagram of single color light fixture

Protective characteristics schematic diagrams

Schematic diagram of input undervoltage protection

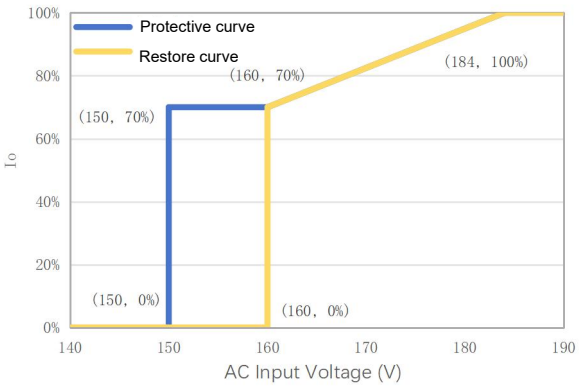

Schematic diagram of input overvoltage protection

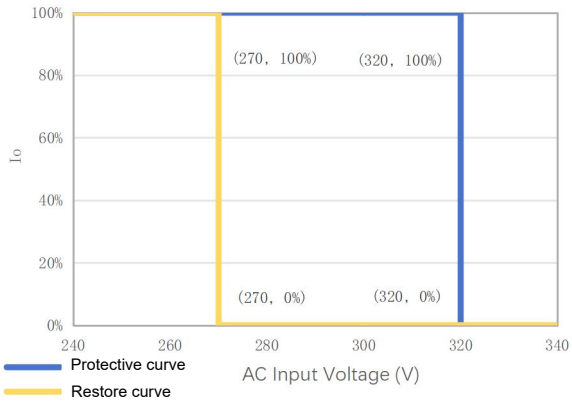

Protective characteristics

Protective type		Min.	Typ.	Max.	Introduction
Input undervoltage protection	Protective voltage	145Vac	150Vac	155Vac	When the input voltage is lower than the protective voltage, the light will be off.
	Restore voltage	156Vac	160Vac	165Vac	When the input voltage is higher than the restore voltage, the light can be automatically turned on.
Input overvoltage	Protective voltage	310Vac	320Vac	330Vac	When the input voltage is higher than the protective voltage, the light will be off.

protection	Restore voltage	261Vac	270Vac	278Vac	When the input voltage is lower than the restore voltage, the light can be automatically turned on.

Note: By default, only the input undervoltage and input overvoltage states are reported, and the light will not be turned off. It will enter the power-off protection mode only after the software settings are activated.

Capabilities

Dimmable	DALI/PUSH dimmable
Dimming range	1 ... 100%
Tunable white	PUSH
CCT adjustment range	2700K ... 6500K
Overload protection	Yes
Short circuit protection	Hiccup mode (self-recovery)
No-load protection	<250V (Hiccup time 90±10s, self-recovery)
Suitable for fixtures with prot. class	I
Programming interface	DALI/NFC
Control interface	DALI/PUSH
Number of channels	2 channels
EL	Yes
CLO	Yes
DALI Part 251 252 253	Yes

Dimming function instructions

- **DALI dimming function**

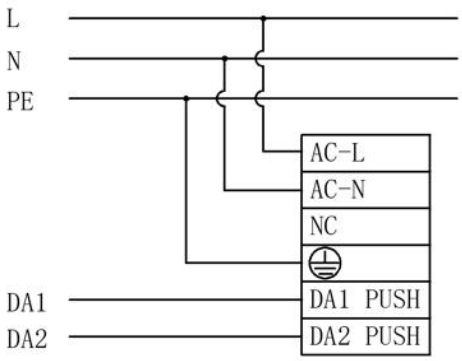

Wiring diagram of DALI dimming

① Default setting brightness is 100%.

② Connect DALI signal to DA1 PUSH and DA2 PUSH.

③ DALI protocol includes Max.16 scene groups.

④ Maximum number of LED drivers connected in parallel in DALI dimming mode: 64 pcs.

⑤ Current at minimum dimming of DALI dimming: 11mA.

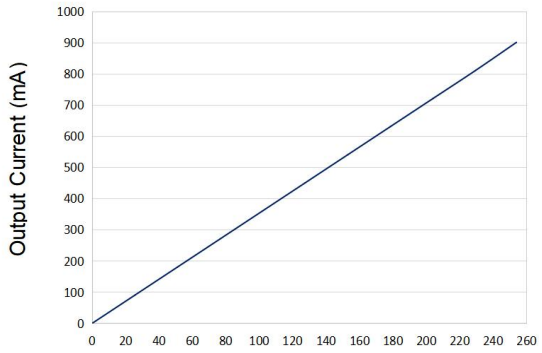

Linear dimming

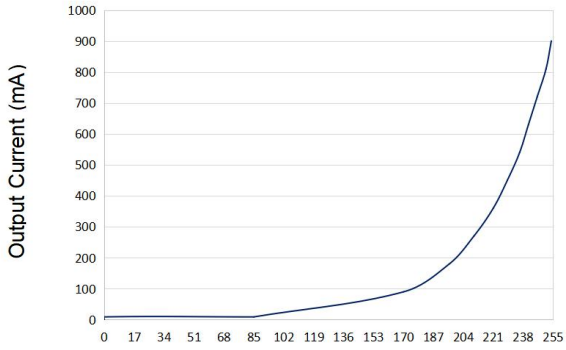

Logarithmic dimming

Note: The DALI and PUSH dimming functions cannot be used simultaneously; otherwise, the DALI dimmer will be damaged.

• PUSH dimming function

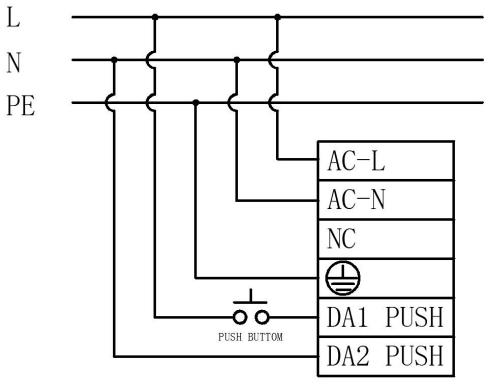

Wiring diagram of PUSH dimming

Switch from DALI mode to PUSH mode: short press PUSH switch to enable PUSH dimming function.

① Connect PUSH switch between AC-L and DA1 PUSH in series and connect DA2 PUSH to AC-N.

② Make sure that AC-L and AC-N are NOT directly connected to DA1 PUSH and DA2 PUSH terminals.

③ Make sure that PUSH switch is off before the AC is powered on; operate PUSH after the AC is powered on.

④ Make sure the PUSH switch is off before disconnecting the AC.

⑤ If you have any questions about the wiring and operation, please confirm with Lifud FAE.

⑥ Wrong wiring or operation may cause damage to the driver.

Operation	Duration	Function
Instant Push	0.1-0.5S	LED light on/off
(Dimming mode) Long Push	0.6-9S	LED light dims up/down
Reset Push	>9S	Long press PUSH for more than 9s to reset the brightness to 50%. Wait for 5s, then short press PUSH to turn off the light. At last, long press PUSH again to turn on the light and synchronize the dimming direction

① The PUSH operation won't cause any variations on LED driver if it's less than 0.1S.

② Current at minimum dimming of PUSH dimming: 11mA.

③ Entering the PUSH mode for the first time: the output status is dimming mode by default (100% brightness and 2-channel output

with 50% each for warm and cool white).

④ Long pressing the PUSH switch for the first time: the CCT is unchanged while the brightness decreases.

⑤ The PUSH dimming mode has the memory function in case of any power failure. When the LED driver is powered on again, the light will return to the previous state before power failure.

⑥ The present dimming direction of PUSH dimming is opposite to the former one.

⑦ In automatic mode, long press for more than 3 minutes to enter the corridor dimming function.

• PUSH CCT adjustment function

Operation	Duration	Function
Instant Push	0.1-0.5S	LED light on/off
Double Push	0.1-0.2S	CCT adjustment mode/dimming mode
(CCT adjustment mode) Long Push	0.6-9S	LED CCT becomes cooler/warmer
Reset Push	＞9S	Reset to 50% each for warm and cool white

① The PUSH operation won't cause any variations on LED driver if it's less than 0.1S.

② CCT adjustment function is only supported in DT8 mode.

③ The PUSH dimming mode has the memory function in case of any power failure. When the LED driver is powered on again, the light will return to the previous state before power failure.

④ The present dimming direction of PUSH dimming is opposite to the former one.

⑤ In automatic mode, long press for more than 3 minutes to enter the corridor dimming function.

• Corridor dimming function

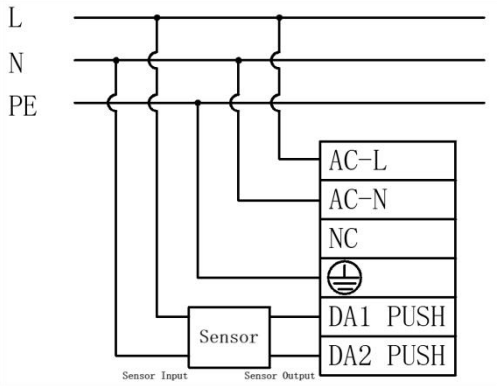

Wiring diagram of corridor dimming

Operations for entering corridor lighting mode

Approach 1: use Lifud programmer to enable the driver's corridor lighting mode and set parameters.

Approach 2: keep pressing PUSH for 3+ mins so as to switch to the corridor lighting mode.

Approach 3: keep the effective sensing signal for 3+ mins (set the sensor's hold time to 3+ mins) to enable the corridor lighting mode.

Remarks:

1. In the automatic detection mode, the driver can be switched from PUSH mode to corridor lighting mode by approach 2 and 3, and its brightness will dim up to 50%; long press for 3 mins and then it dims down first and then dims up, which means the driver has entered the

corridor lighting mode.

2. After activating the corridor dimming mode, PUSH DIM is turned off.

3. In the case of AC input and any level of brightness in the corridor lighting mode, switching to DC and then returning to AC will restart the corridor lighting mode.

Operations for exiting corridor lighting mode

Approach 1: use Lifud programmer to choose other modes and exit corridor lighting mode.

Approach 2: connect the driver to the DALI master to send DALI command, and the driver will return to the DALI dimming mode.

Approach 3: connect the driver to the PUSH switch and continuously press the switch 10 times within 10 secs, and the driver will return to the PUSH dimming mode.

Remark:

1. The 3-sec or above single press or release will cause the press number to be counted as 0.

2. The approach 2 and 3 CANNOT be used if the corridor lighting mode of driver is set via Lifud programmer.

Working process of corridor dimming mode

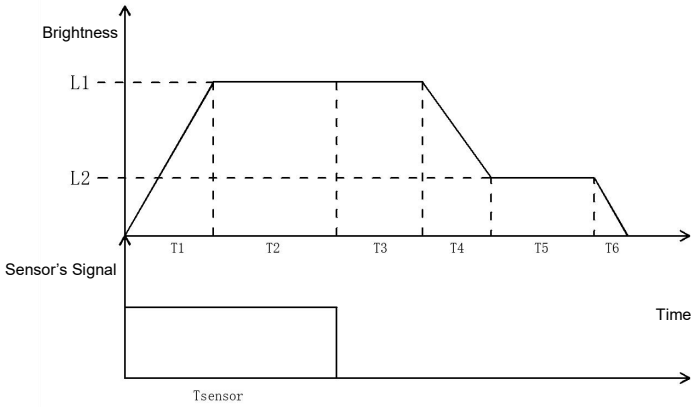

Symbol	Name	Default value	Available setting scope
T1	Fade-in time of sensing	1s	0-100s
T2	Holding time of sensing	Depends on sensor	Depends on sensor
T3	Waiting time of sensing	180s	0-59999s, 60000s (infinite)
T4	Fade-out time of sensing	5s	0-100s
T5	Unattended time	60000s (infinite)	0-59999s, 60000s (infinite)
T6	Fade-out off time	5s	0-100s
L1	Sensing brightness	100%	0-100%
L2	Unattended brightness	10%	0-100%

Emergency function instruction

The default output current is 15% Io max in the case of DC emergency input.

Emergency input voltage: 176-280Vdc. The DC voltage remains constant.

Note:

1. The emergency output current can be set via Lifud programmer and programming software (or FEIG NFC reader).

2. It can be set from 0 to 100%. (When the input is less than 185VDC, the output is derated. At 160VDC, it drops to about 70% of the peak value)

3. If the emergency mode is off, input current is DC and the working mode is the same as that when the input is AC.

4. In the case of mains input, the brightness is random when using PUSH dimming. When the driver enters the emergency lighting mode and then reconnects AC, the light brightness will remain the one set via PUSH switch when mains is connected.

5. In the case of mains input, the brightness is random when using DALI dimming. When the driver enters the emergency lighting mode and then reconnects AC, the light brightness will return to the brightness when DALI is powered on.

6. After enabling the overvoltage and undervoltage protection function: In undervoltage protection, the power will be off when it is <165Vdc and restart when it is >175Vdc; in overvoltage protection, the power will be off when it is >286Vdc and restart when it is <276Vdc. (Deviation: ±5V)

Programmer tools and software

Product	Name	Brand	Model	Software
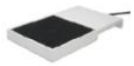	NFC desktop programmer	FEIG	ID CPR30+	Lifud SmartSet
	NFC handheld programmer	FEIG	ID ISC.PRH101-USB	Lifud SmartSet
	NFC batch programmer	FEIG	ID ISC.LRM1002-E ID ISC.ANT300/300-A	Lifud SmartSet
	Lifud programmer	LIFUD	LF-SCS080C	Lifud SmartSet
	NFC App	LIFUD	-	Lifud NFC

Read/write and parameter configuration

Programming project	Default settings	Parameters settings	Read/Write
Production information	-	No	Read
Output current	125mA (default)	Yes	Read/Write
Operating mode	Automatic detection	Yes	Read/Write
Output mode	1 channel DT8	Yes	Read/Write
EL	15% (default)	Yes	Read/Write
CLO	Inactivated	Yes	Read/Write
DALI Part 251	Activated	Yes	Read/Write
DALI Part 252	Activated	Can only be reset	Read/Write
DALI Part 253	Activated	Can only be reset	Read/Write

Function instructions

①NFC programmer

PC Software NFC Reader LED Driver

Note: When using the NFC reader, the driver is not allowed to operate while powered on. The driver must be powered off and completely discharged before it can read and write normally.

②Lifud programmer

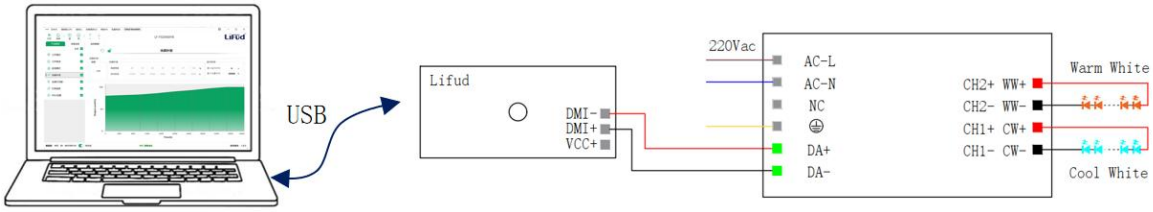

PC Software Lifud Programmer LED Driver

Note: When using the Lifud programmer, the driver must be powered on for normal reading and writing.

③NFC APP

NFC Software Interface APP Download QR Code

Note: When using the NFC APP for parameter settings, the driver is not allowed to operate while powered on. The driver must be powered off and completely discharged before it can read and write normally.

Certificates & standards

Approval marks	ENEC, CE, CB, EL, RCM, DALI-2
Standards	EN 61347-2-13; EN 61347-1; EN 62384; EN 62493; EN 55015; EN 61547; EN 61000-3-2; EN 61000-3-3; IEC61347-1; IEC61347-2-13; EN IEC 61347-2-13 Annex J; AS 61347.2.13 & AS/NZS 61347.1NZS 61347.1 DALI-2 certified (Part 101, 102, 207, 209, 251, 252, 253)
Type of protection	IP20

Logistical data

Product	Packaging unit (Pieces/Unit)	Dimensions (L*W*H)	Volume	Gross weight
LF-FSD075YF	40	385mm*285mm*210mm	23.04dm³	11.74kg±5%

Test equipment & condition

Test equipment	AC power source: CHROMA6530, digital power meter: CHROMA66202, oscilloscope: Tektronix DPO3014, DC electronic load: M9712B, LED board, constant temperature and humidity chamber, lightning surge generator: Everfine EMS61000-5B, rapid group pulse generator: Everfine EMS61000-4A, spectroanalyzer: KH3935, hi-pot tester: EEC SE7440, flicker tester (flicker-free coefficient test): Everfine LFA-3000, etc.
Compatibility of DALI dimming	Yuanhao Master, Simon Master, Philips Master DDBC120-DALI, OSRAM Master, Helvar Master 905 Router, Tridonic Master and HDL MC64-DALI431 Master

If there are no special remarks, the above parameters are tested at the ambient temperature of 25℃, humidity of 50%, maximum output load and input voltage of 230Vac/50Hz.

Additional information

1. It is recommended that user install the over voltage protection, under voltage protection and surge protection devices in the power supply circuits of light fixtures to ensure electricity safety.

2. The LED driver used in combination with the end device is one of the accessories of the whole light fixture, and the EMC of the whole light fixture is not only susceptible to the driver itself, but to the LED light fixture and the whole light fixture's wiring. Thus, the manufacturer of LED light fixture should re-confirm the EMC of the whole light fixture before the whole light fixture is finished.

3. The number of LED drivers that can be connected to a circuit breaker and the inrush current are tested under the same conditions.

4. The PC cover, casing and end cap for assembling the LED driver in the light fixture must meet the fire rating of UL94-V0 or above.

5. DC input is only for emergency.

6. In no-load condition, it is recommended that user not directly connect the LED driver to the light fixture in case that the light fixture is damaged.

7. It is well-advised that the withstanding voltage of LEDs and aluminum substrates be >3kVac.

8. When the load power of the product is <75W, it will output at the set constant current; when the load power is >75W, it will output at a constant power of 75W±2W.

9. The default current of LED driver is 125mA and it can be set by Lifud programmer and programming software(or FEIG NFC reader).

10. When using other DALI masters, please test their compatibilities with Lifud LED driver in advance.

11. If the parasitic capacitance between LEDs and the PCBA is too large, and the light fixture is grounded, there will be a slight flicker at the moment of power on.

12. ① 1 channel DT8: The LED driver has dimming and tunable white functions and can be connected to dimmable and CCT adjustable light fixtures. The LED driver occupies 1 DALI address.

② 2 channels DT6: The LED driver has dimming function and can be connected to single color dimming light fixtures. The LED driver occupies 2 DALI addresses, with 1 address controlling 1 light fixture. The brightness of each light fixture can be independently adjusted, or the brightness of the two light fixtures can be adjusted synchronously.

③ 1 channel DT6: The LED driver has dimming function and can be connected to single color dimming light fixtures. The LED driver occupies 1 address. Whether it is connected to one light fixture or two light fixtures, the brightness of the light fixtures can only be adjusted synchronously.

13. Lifud Technology Co., Ltd. reserves the right to interpret any content of this specification.

Transportation & storage

Suitable transportation means: vehicles, boats and aeroplanes.

In transit, it is necessary to prepare awnings for rain or sun protection. Moreover, please keep civilized loading and unloading to prevent the vibration or impact on LED driver as much as possible.

The storage of LED driver shall conform to the standard of Class I environment.

1. When using the products which have been stored for more than 6 months, please re-test their electrical parameters firstly by powering on. Do not use them unless they are tested to be qualified.

2. When using the products which have been stored for 6 to 12 months, please run them on power for more than 2 hours firstly.

3. When using the products which have been stored for more than 12 months, please conduct an actual assessment of quality risks firstly. Direct use is not recommended.

Cautions

Please use Lifud LED driver according to its parameters in the specification, otherwise the LED driver may malfunction.

Using any incompatible light fixtures or those that have not been certified may cause fire, explosion or other risks.

Man-made damage is beyond the scope of Lifud warranty service.

Disclaimer

Subject to change without notice. Errors and omissions excepted. Always make sure to use the most recent release.