LT-858-CC
DMX/RDM CC DECODER

FC CE RoHS 5-year warranty

LT-858-CC with the standard RDM remote device management protocol, supports DMX512 signal bi-directional communication, achieves remote management of reading and writing DMX address (DMX master controller must recognize the RDM protocol). Realize 0-100% dimming or different lighting effects; work with DIM, CT, RGB,RGBW LED lamps.

1. Product Parameters

LT-858-CC

Input Signal:	DMX512, RDM	DMX512 Socket:	RJ45
Input Voltage:	12~48Vdc	Dimming Range:	0~100%
Output Voltage:	3-42Vdc	Working Temp.:	-30℃~65℃
Current Load:	(300mA-1050mA)×4CH	Dimensions(L×W×H):	L175×W42×H33(mm)
Output Power:	(0~44.1W)×4CH Max. 176.4W	Package Size(L×W×H):	L183×W48×H41(mm)
		Weight (G.W.):	310g

2. Product Size

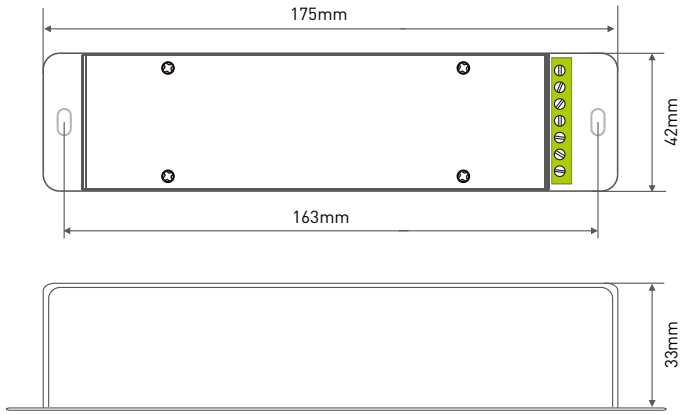

3. Main component description

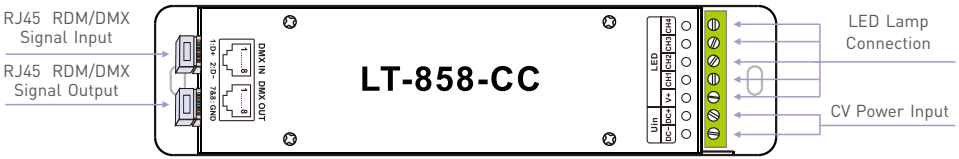

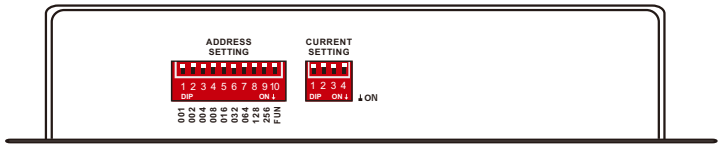

4. Operating instructions for current and address settings

4.1 LED Current Selection

Please set the current value when the power is off.

LT-858-CC	DIP Switch									ON
	Output Current	300mA	350mA	400mA	450mA	500mA	550mA	600mA	650mA	
	Output Voltage	3-42V	3-42V	3-42V	3-42V	3-42V	3-42V	3-42V	3-42V	
	Output Power	0.9-12.6W	1.05-14.7W	1.2-16.8W	1.35-18.9W	1.5-21W	1.65-23.1W	1.8-25.2W	1.95-27.3W	
	DIP Switch									
	Output Current	700mA	750mA	800mA	850mA	900mA	950mA	1000mA	1050mA	
	Output Voltage	3-42V	3-42V	3-42V	3-42V	3-42V	3-42V	3-42V	3-42V	
	Output Power	2.1-29.4W	2.25-31.5W	2.4-33.6W	2.55-35.7W	2.7-37.8W	2.85-39.9W	3-42W	3.15-44.1W	

4.2 Mode settings

RDM Mode: The dip switch 1-10 are OFF.

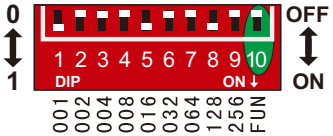

DMX Mode: FUN=OFF (the 10th dip switch=OFF)

Setting DMX addresses with dip switch 1-9

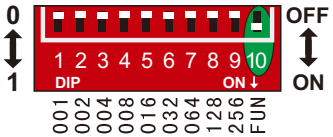

Self-testing Mode: FUN=ON (the 10th dip switch=ON)

4.3 Operating instructions for DMX512 address settings

FUN=OFF (the 10th dip switch=OFF) **DMX Mode**

DMX address value = the total value of (1-9), to get the place value when in "on" position, otherwise will be 0.

E.g.1: Set Initial Address To 32.

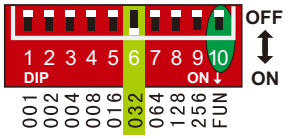

E.g.2: Set Initial Address To 37.

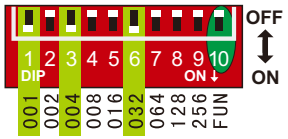

001+004+032=37

E.g.3: Set Initial Address To 178.

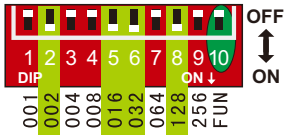

002+016+032+128=178

4.4 Self-testing function description

FUN=ON (the 10th dip switch=ON) **Self-testing Mode**

Dip Switch	1-9=OFF	1=ON	2=ON	3=ON	4=ON	5=ON	6=ON	7=ON	8=ON	9=ON
Self-testing Function	Static Black	Static Red	Static Green	Static Blue	Static Yellow	Static Purple	Static Cyan	Static White	7 Color Jumping	7 Color Gradient

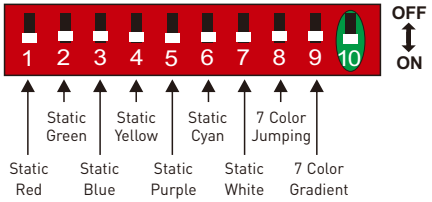

For changing effects (Dip Switch 8/9=ON):
DIP switch 1-7 is used to realize 7 speed levels.
(7=ON, the fastest speed level)

[Attn] When several dip switches are ON, subjected to the highest switch value.
As the figure above shows, the effect will be 7 color gradient at 7 speed level.

4.5 DMX Dimming Instructions

Each LT-858-CC DMX decoder occupied 4 DMX addresses when connecting the DMX console.

e.g., the defaulted initial address is 1, please find their corresponding relationships in the form.

DMX Console	DMX Decoder output channel
CH1 0-255	CH1 PWM 0-100% (LED R)
CH2 0-255	CH2 PWM 0-100% (LED G)
CH3 0-255	CH3 PWM 0-100% (LED B)
CH4 0-255	CH4 PWM 0-100% (LED W/Y)

5. Wiring Diagram

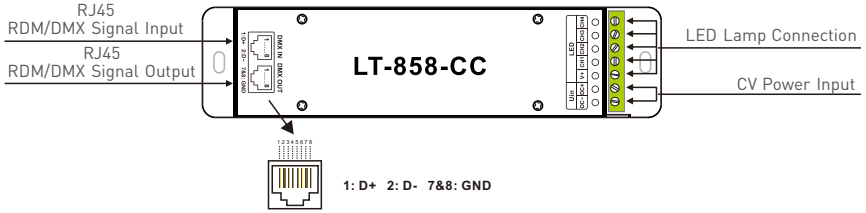

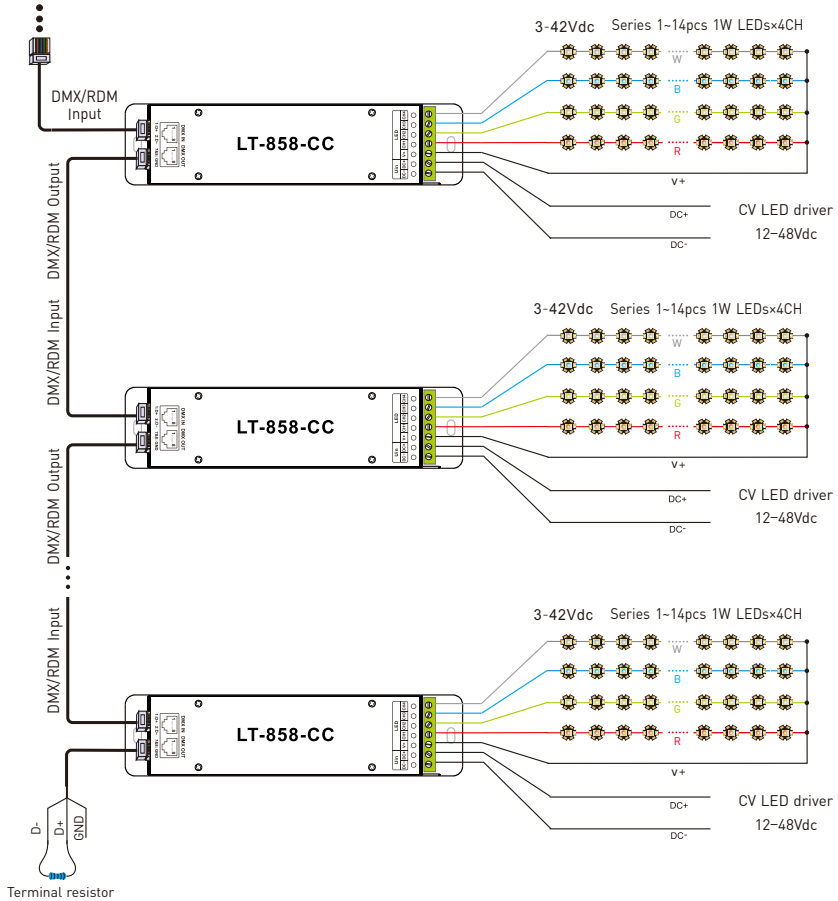

* If the recoil effect occurs because of longer signal line or bad line quality, please try to connect 0.25W 90-120Ω terminal resistor at the end of each line.
* An amplifier is needed when more than 32 decoders are connected, signal amplification should not be more than 5 times continuously.

6. Attentions

6.1 Products shall be installed by qualified professionals.

6.2 LTECH products are non-waterproof (special models excepted). Please avoid the sun and rain. When installed outdoors, please ensure it is mounted in a water proof enclosure.

6.3 Good heat dissipation will extend the working life of products. Please ensure good ventilation.

6.4 Please check if the working voltage used complies with the parameter requirements of products.

6.5 The diameter of wire used must be able to load the light fixtures you connect and ensure the firm wiring.

6.6 Before you power on products, please make sure all the wiring is correct in case of incorrect connection that causes damage to light fixtures.

6.7 If a fault occurs, please do not attempt to fix products by yourself. If you have any question, please contact your suppliers.

* This manual is subject to changes without further notice. Product functions depend on the goods. Please feel free to contact our official distributors if you have any question.

7. Warranty Agreement

- Warranty periods from the date of delivery : 5 years.
- Free repair or replacement services for quality problems are provided within warranty periods.

7.1 Warranty exclusions below:

- Beyond warranty periods.
- Any artificial damage caused by high voltage, overload, or improper operations.
- Products with severe physical damage.
- Damage caused by natural disasters and force majeure.
- Warranty labels and barcodes have been damaged.
- No any contract signed by LTECH.

7.2 Repair or replacement provided is the only remedy for customers. LTECH is not liable for any incidental or consequential damage unless it is within the law.

7.3 LTECH has the right to amend or adjust the terms of this warranty, and release in written form shall prevail.

Update Log

Version	Updated Time	Update Content	Updated by
A1	2018.03	Updated the silk screen picture.	Huang Yunting
A2	2021.03.30	Deleted ISO9001 certification icon; modified the warranty agreement and attentions; modified the output voltage and output power; added the DIP switch current setting sheet; description was modified on P1 and main component description was added on P2.	Xu Shujun