T +44 (0) 1942 671122 E sales@plusopto.co.uk W www.plusopto.co.uk
B13 Derwent Court William Way Moss Industrial Estate Leigh Lancashire WN7 3PT

SUPER BRIGHT ROUND TYPE LED LAMPS

Lead-Free Parts

PRELIMINARY

This is just a preliminary design
to let you evaluate the concept

LHIR3833-T50/A-PF

DATA SHEET

DOC. NO : QW0905-LHIR3833-T50/A-PF

REV. : A

DATE : 23-Mar.-2026

Package Dimensions

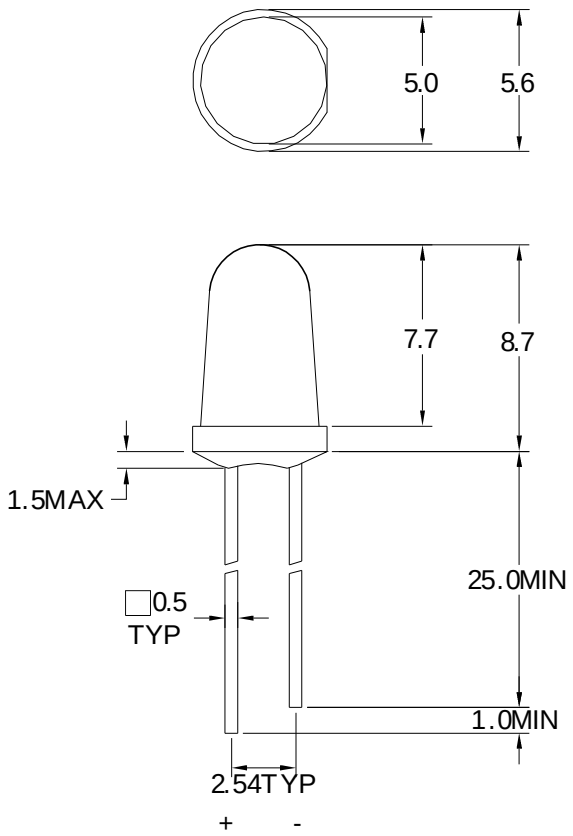

Note : 1. All dimension are in millimeter tolerance is ±0.25mm unless otherwise noted.
2. Specifications are subject to change without notice.

Directivity Radiation

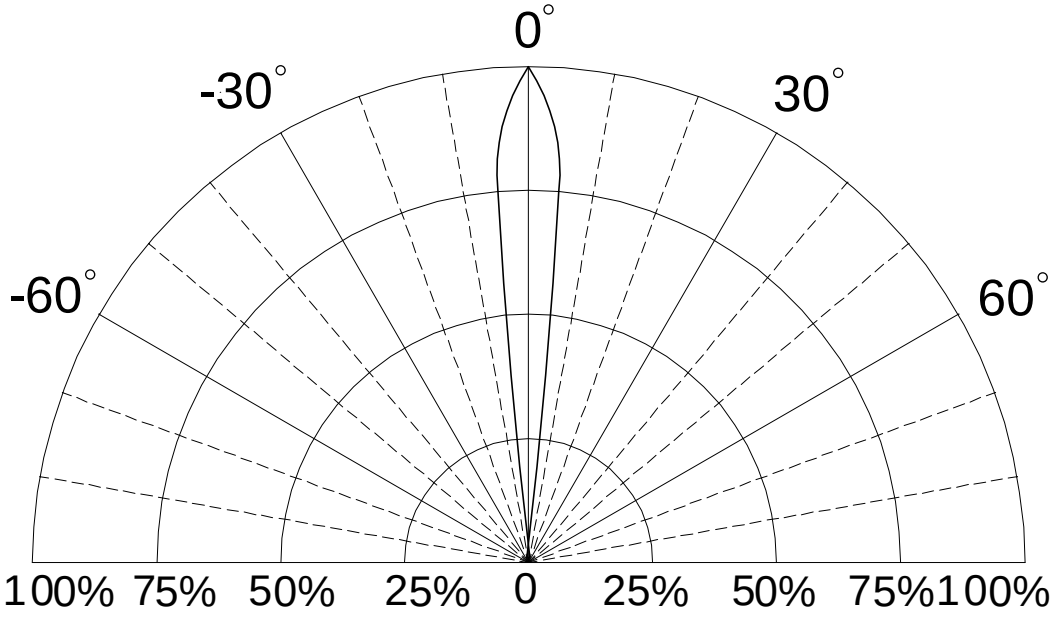

Absolute Maximum Ratings at Ta=25 ℃

Parameter	Symbol	Ratings	UNIT
		HIR	
Forward Current	I_F	100	mA
Peak Forward Current (300PPS,10 μs Pulse)	I_{FP}	800	mA
Power Dissipation	PD	100	mW
Reverse Voltage	Vr	5	V
Electrostatic Discharge	ESD	2000	V
Operating Temperature	T_{opr}	-40 ~ +85	℃
Storage Temperature	Tstg	-40 ~ +85	℃

* Static Electricity or power surge will damage the LED. Use of a conductive wrist band or anti-electrosatic glove is recommended when handing these LED. All devices, equipment and machinery must be properly grounded.

Electrical Optical Characteristics (Aa=25℃)

PARAMETER	SYMBOL	Min.	Typ.	Max.	UNIT	TEST CONDITION
Radiant Intensity	Le	105	220		mW/sr	IF=50mA
Peak Emission Wavelength	λ peak		850		nm	IF=50mA
Spectral Line Half Width	△λ		45		nm	IF=50mA
Forward Voltage	VF		1.5	2.0	V	IF=50mA
Reverse Current	IR			10	μA	VR=5V
Viewing Angle	2θ1/2		10		deg	

Note：1.The forward voltage data did not including±0.1V testing tolerance.
2. The wave length data did not including ± 1nm testing tolerance.
3.The luminous intensity data did not including ±15% testing tolerance.
4.The products should be stored at -5℃～30°C and 20%～75%RH after being shipped from the factory and the storage life limits are 12 months.

Typical Electro-Optical Characteristics Curve

HIR CHIP

Fig.1 Forward Current vs. Rorward Voltage

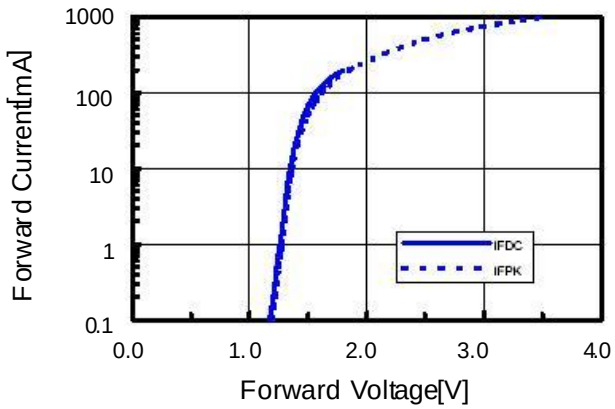

Fig.2 Relative Radiant Power vs. Wavelength

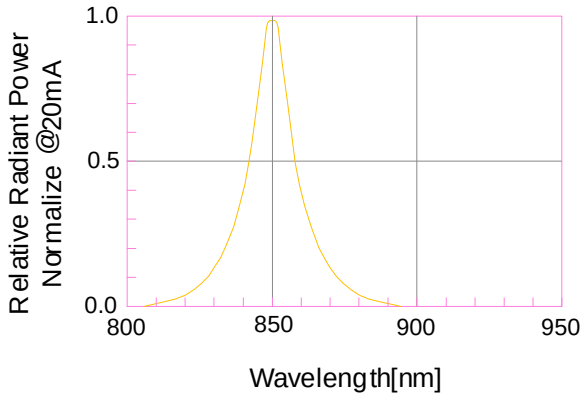

Fig.3 Relative Radiant Power
vs. Forward DC Current

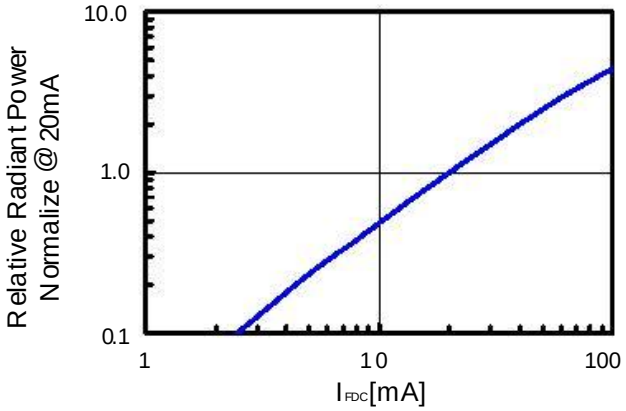

Fig.4 Relative Radiant Power
vs. Forward Peak Current

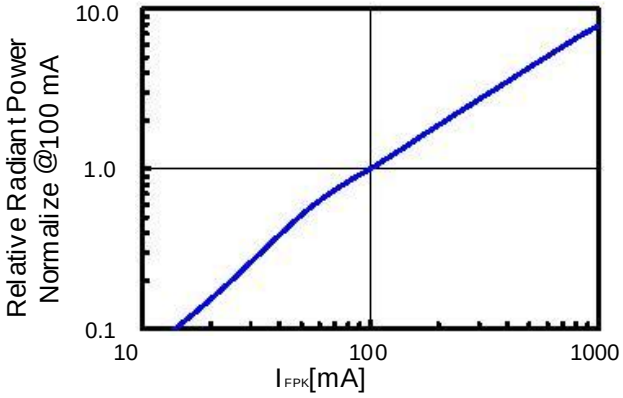

Fig.5 Forward DC Voltage vs. Temperature

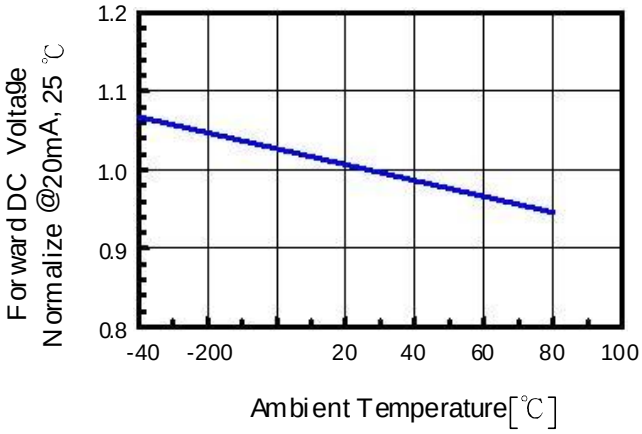

Fig.6 Relative Radiant Power vs. Temperature

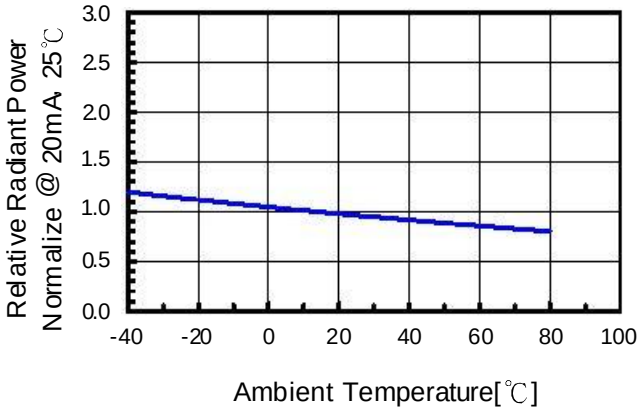

Storage time:

1. The operation of Temperatures and RH are : 5℃~35℃,RH<60%.

2. Once the package is opened, the products should be used within a week. Otherwise, they should be kept in a damp proof box with descanting agent. Considering the tape life, we suggest our customers to use our products within a year(from production date).

3. If opened more than one week in an atmosphere 5℃ ~ 35℃,RH<60%, they should be treated at 60℃±5 ℃ for 15hrs.

Drive Method:

LED is a current operated device, and therefore, require some kind of current limiting incorporated into the driver circuit. This current limiting typically takes the form of a current limiting resistor placed in series with the LED.
Consider worst case voltage variations than could occur across the current limiting resistor. The forwrd current should not be allowed to change by more than 40% of its desired value.

Circuit model A

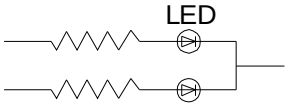

Circuit model B

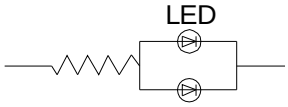

(A) Recommended circuit.
(B) The difference of brightness between LED could be found due to the VF-IF characteristics of LED.

Cleaning:

Use alcohol-based cleaning solvents such as isopropyl alcohol to clean the LED.

ESD(Electrostatic Discharge):

Static Electricity or power surge will damage the LED. Use of a conductive wrist band or anti-electrosatic glove is recommended when handing these LED. All devices, equipment and machinery must be properly grounded.

Mounting:

1. If the leads are subjected to stress during soldering a printed circuit board, illumination failure may result immediately or later during use. For this reason, make sure that the intervals between the installation holes in the board are equal to the intervals between the leads (after forming if done) so that no stress is applied to the lead.

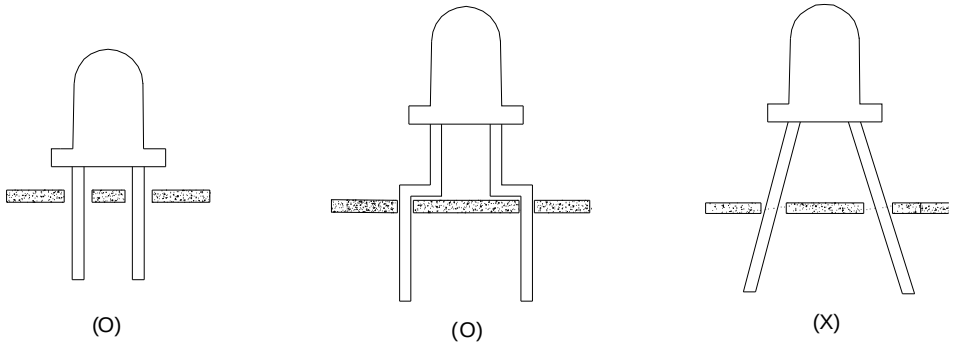

2. The LED lamps are designed for high-density mounting and have a structure which can alleviate mechanical stress due to clinching . Nevertheless , take care to avoid the occurrence of residual mechanical stress due to clinching .

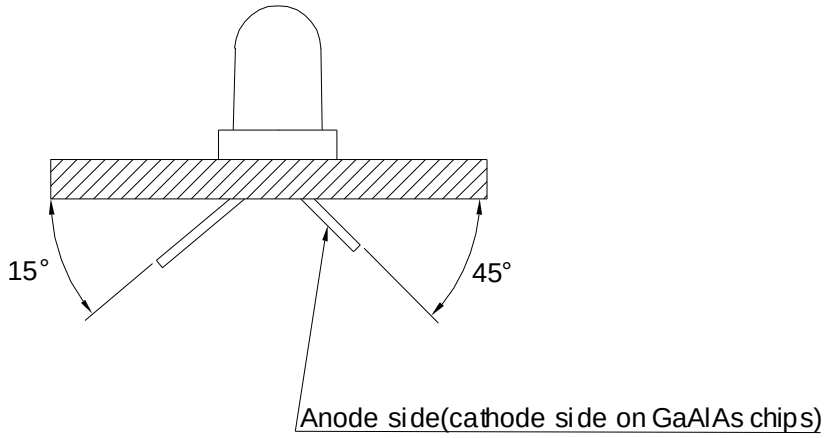

Soldering Condition(Pb-Free)

1.Iron:

Soldering Iron:30W Max
Temperature 350°C Max
Soldering Time:3 Seconds Max(One Time)
Distance:2mm Min(From solder joint to body)

2.Wave Soldering Profile

Dip Soldering
Preheat: 120°C Max
Preheat time: 60seconds Max
Ramp-up
2°C/sec(max)
Ramp-Down:-5°C/sec(max)
Solder Bath:260°C Max
Dipping Time:3 seconds Max
Distance:2mm Min(From solder joint to body)

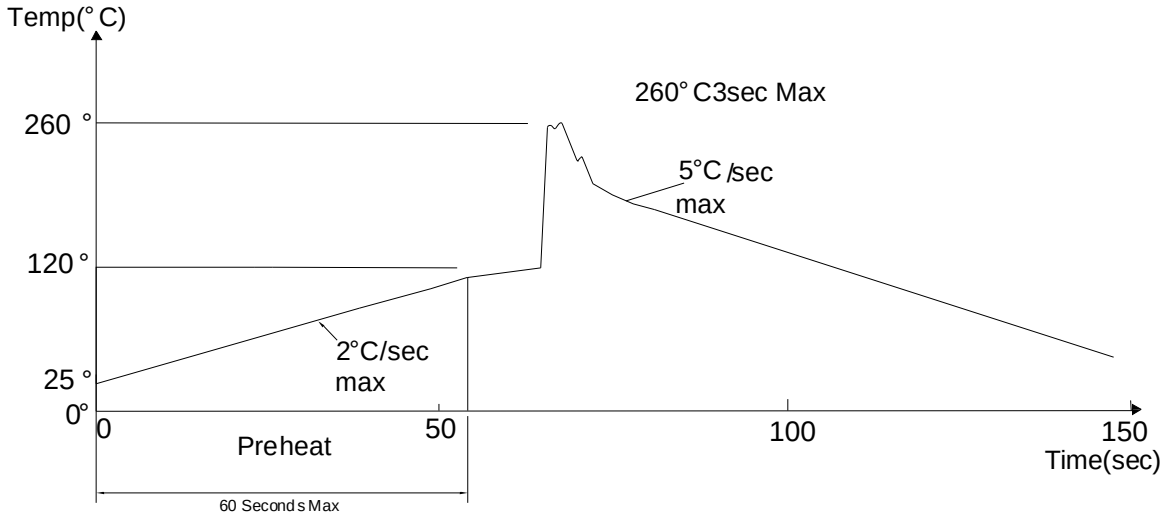

Reliability Test

Test Item	Test condition	Description	Reference Standard
Operating Life Test	1.Under Room Temperature 2.If=20mA 3.t=1000 hrs（-24hrs，+72hrs）	This test is conducted for the purpose of determining the resistance of a part in eletrical and themal stressed.	MIL-STD-750:1026 MIL-STD-883:1005 JIS C 7021:B-1
High Temperature Storange Test	1.Ta=105℃±5℃ 2t=1000 hrs（-24hrs，+72hrs）	The purpose of this test is the resistance of the device which is laid under condition of high temperature for hours.	MIL-STD-883:1008 JIS C 7021:B-10
Low Temperature Storange Test	1.Ta=-40℃±5℃ 2.t=1000 hrs（-24hrs，+72hrs）	The purpose of this test is the resistance of the device which is laid under condition of low temperature for hours.	JIS C 7021:B-12
High Temperature High Humidity Test	1.Ta=65℃±5℃ 2.RH=90%～95% 3.t=240hrs±2hrs	The purpose of this test is the resistance of the device under tropical for hours	MIL-STD-202:103B JIS C 7021：B-11
Thermal Shock Test	1.Ta=105℃±5℃&-40℃±5℃ （10min）（10min） 2.Total 10 cycles	The purpose of this test is resistance of the device to sudden extreme changes in high and low temperature.	MIL-STD-202:107D MIL-STD-750:1051 MIL-STD-883:1011
Solder Resistance Test	1.T.Sol=260℃±5℃ 2.Dwell time=10±1sec.	This test intened to determine the themal characteristic trssitance of the device to sudden exposures at extrene changes in temperature when soldering the lead wire.	MIL-STD-202:210A MIL-STD-750:2031 JIS C 7021:A-1
Solderability Test	1.T.Sol=245℃±5℃ 2.Dwell time=5±1sec.	This test intened to see soldering well performed or not	MIL-STD-202:208D MIL-STD-750:2026 MIL-STD-883:2003 JIS C 7021:A-2