LF-BCD040C-1050-54

Programmable DALI-2 Dimmable LED Driver

Product family features

— DALI&PUSH dimmable

— Dimming range 1-100%

— Wide output voltage range: 2.5-54V

— Wide output current range:300-1050mA

— Efficiency up to 90%

— Low THD≤10%

— Suitable for Class I/II light fixtures

— 5 years guarantee

— Lifetime up to 100,000h

Product family benefits

— Advanced functions: EL, CorridorDIM, CLO

— DALI-2 part ext. 251, 252 and 253

— Parameters adjustable via DALI programmer

— 21.8mm ultra-thin

— 4-bit 16-shift current adjustable via DIP switch

— Surge level: PUSH: 1kV; L-N: 2kV

Typical applications

— For down light and panel light

— For office, residential and commercial lighting

Product parameters

— Output current 300-1050mA

— Output power 16.2-40W

— Input voltage 198–264Vac

— Output voltage 2.5-54Vdc

— Efficiency 90%

Electrical data

Input data

Rated input voltage	220 ... 240V
AC voltage range	198 ... 264V
Mains frequency	0/50/60Hz
Input voltage DC	220 ... 240V
DC voltage range	176 ... 280V
Power factor	≥0.95
Efficiency	≥90%[1)]
THD	≤10%
Input current	0.25A Max @AC230V input 0.077-0.206A @DC input
Inrush current	31A[2)]
Loading number on circuit breaker 10 A (B)	25
Loading number on circuit breaker 10 A (C)	42
Loading number on circuit breaker 16 A (B)	41
Loading number on circuit breaker 16 A (C)	68
Protective conductor current	≤0.7mA
Stand-by power consumption	≤0.5W

Output data

Nominal output voltage	2.5... 54V
Nominal output current	300...1050mA
Default output current	300mA
Current setting	DIP switch
Maximum output power	40W
Nominal output power	16.2 ... 40W
Current tolerance	±5%[3)]
Output ripple current (100 Hz)	±3.3 %
Flicker	According to IEEE Std 1789-2015
CIE SVM	≤0.4
IEC-Pst	≤1
Temperature tolerance	±5%
AC start-up time	<1S
DC start-up time	<0.8S
AC/DC switch time	<0.8S

Safety

Withstanding voltage	I/P-O/P: 3.75kV&5mA&60S; I/P-DA1/DA2, O/P-DA1/DA2: 1.5kV&5mA&60S
Surge capability (L-N)	2kV
PUSH[4)]	1kV
Insulation resistance	I/P-O/P, I/P-DA1/DA2, O/P-DA1/DA2: >100MΩ@500VDC
Lifetime	Up to 100,000 hours[5)]

Guarantee	5 years[6)]

1) Measured under load conditions of 750mA&53V, 800mA&50V
2) t =160μs
3) For loads below 9V in current ranges of 500mA or lower, it is ±7%
4) The surge test wiring at the PUSH terminal is connected in parallel with L-N
5) For details, please refer to the service life table
6) 5 years@Tc≤85℃

Characteristic diagrams

Operating Window

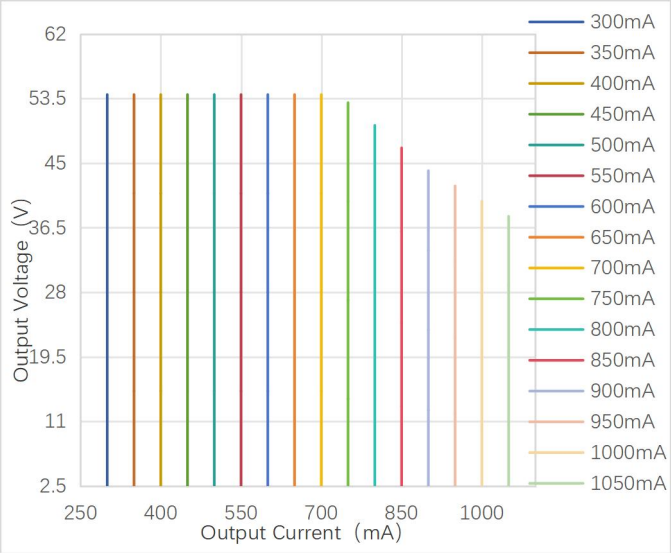

Typical Efficiency vs Load

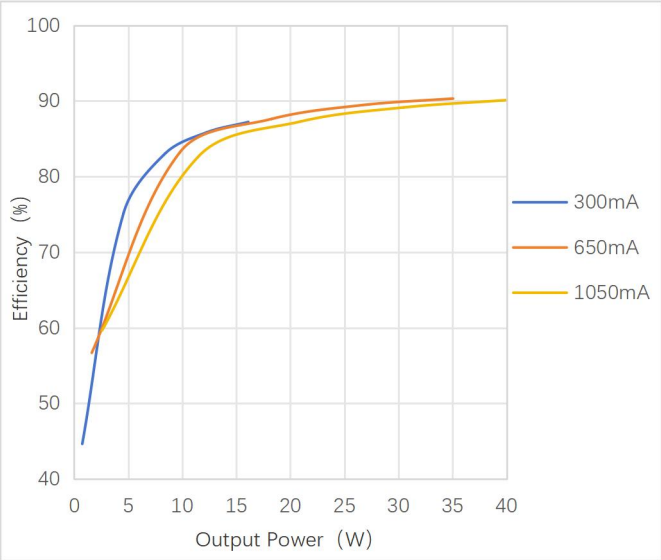

Typical Power Factor vs Load

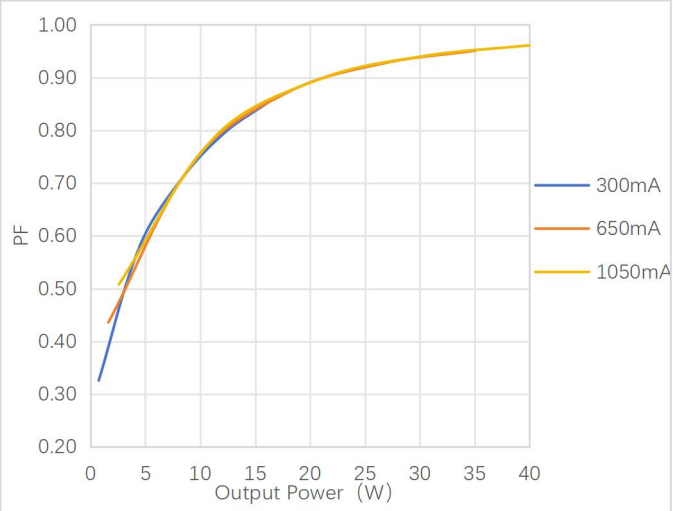

Typical THD vs Load

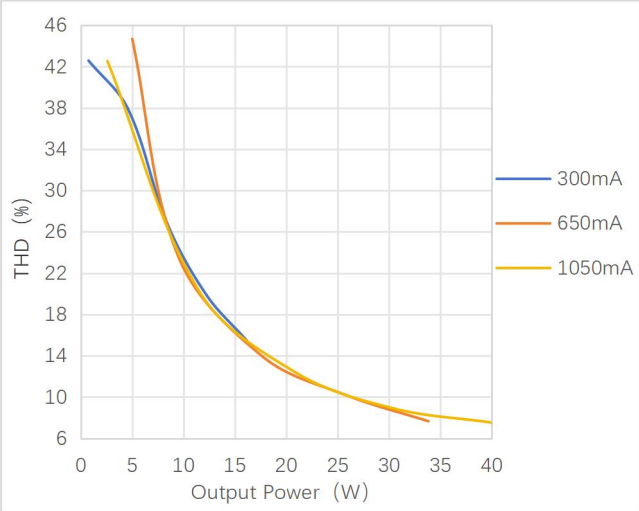

Lifespan

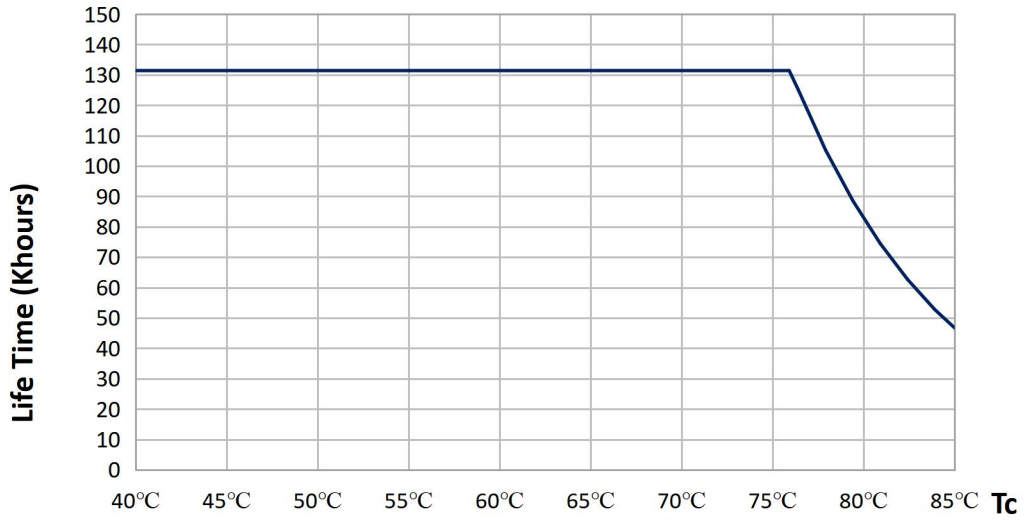

Service life

Model	Iout	Pout	Ta	35°C	45°C
LF-BCD040C-1050-54	1050mA	40W	Tc	72°C	82°C
			Lifetime	>100,000h	>50,000h

Note: The design life of the LED driver is as described above under reference conditions. The failure probability is less than 10%.

The relationship between Tc and Ta also depends on the design of the luminaire.

Dimensions

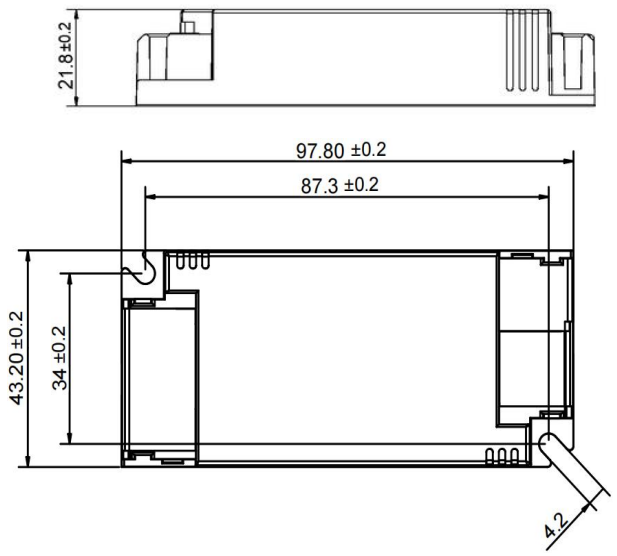

(without end cap)

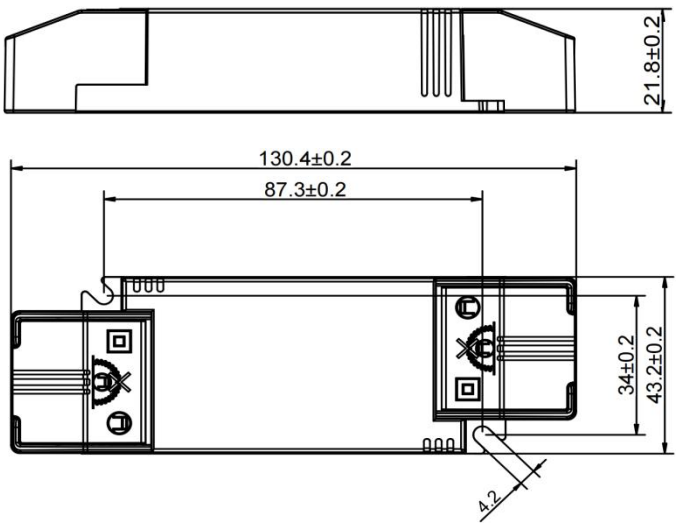

(with small end cap)

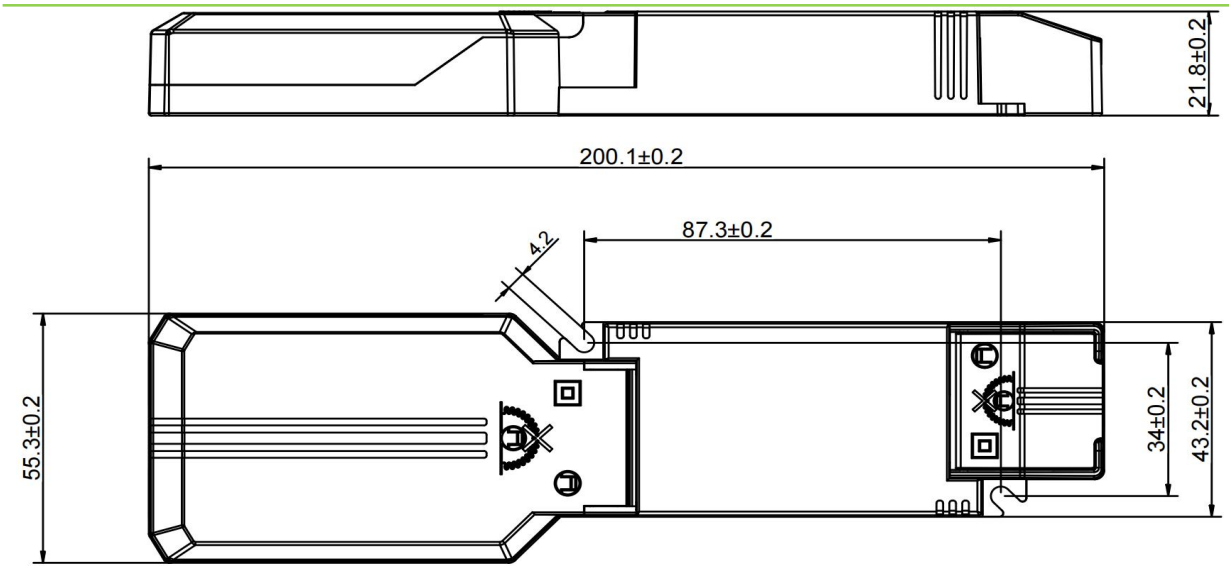

(with large end cap)

Mounting hole spacing, length	87.3*34mm
Diameter of positioning hole	4.2mm
Product weight	99g
Cable cross-section, input side	0.75 ... 1.5 mm²
Cable cross-section, output side	0.5 ... 1.0 mm²
Cable outside diameter, input side	3 ... 7 mm (small end cap) 3 ... 10mm (large end cap)
Cable outside diameter, output side	3 ... 7 mm (small end cap)
Wire preparation length, input side	7 ... 8mm
Wire preparation length, output side	7 ... 8mm
Length	97.8±0.2mm
Width	43.2±0.2mm
Height	21.8±0.2mm

Colors & materials

Casing material	PC
Casing color	White

Accessory

Large end cap	Type E large end cap (P/N: 5.1.08000000003)
Small end cap	Type D small end cap (P/N: 5.1.08000000004)

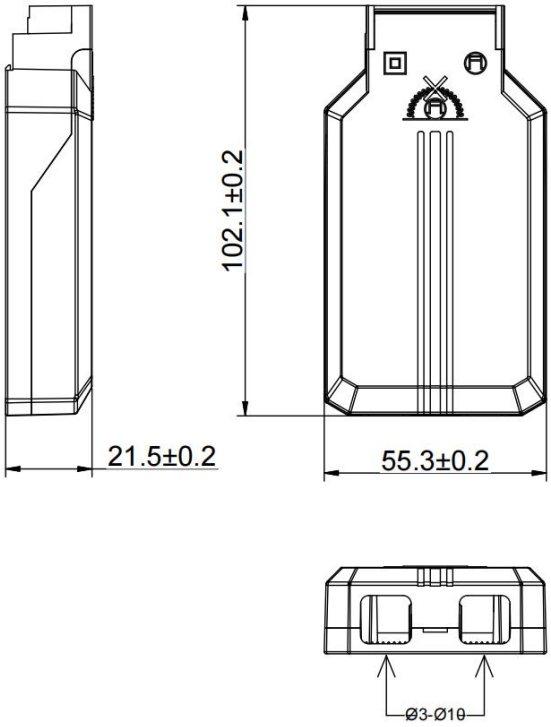

(large end cap)

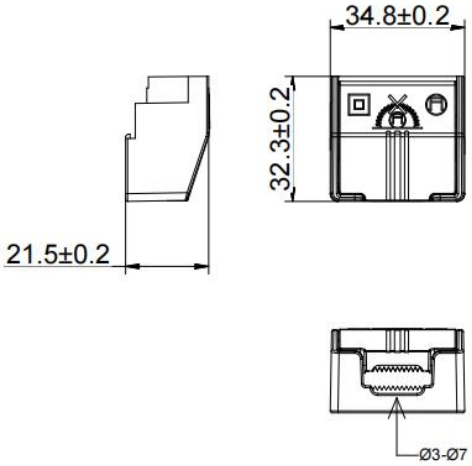

(small end cap)

Temperature & operating conditions

Ambient temperature range	-30℃ - +45℃
Maximum temperature at tc test point	85℃
Temperature range at storage	-30℃ - +80℃ (6 months in Class I environment)
Humidity range at storage	20-75%RH (no condensation)
Humidity during operation	20-95%RH (no condensation)
Atmospheric pressure	80-106KPa
RoHS	RoHS 2.0 (EU) 2015/863

Tc test point

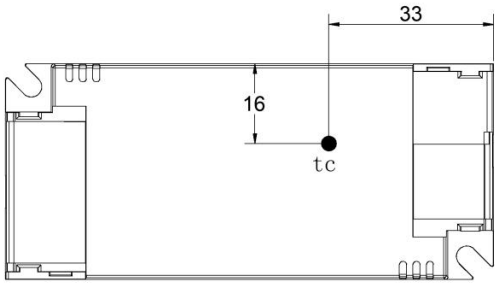

Tc point is at the top of LED driver

Product terminal

Input		Output	
AC-N	AC neutral wire input	**LED+**	Positive terminal output of LED driver
AC-L	AC live wire input	**LED1-**	Negative terminal output of LED driver(>5V)
DA2 PUSH	DALI/PUSH dimming input	**LED2-**	Negative terminal output of LED driver(≤5V)
DA1 PUSH	DALI/PUSH dimming input		

Wiring diagrams of output terminal

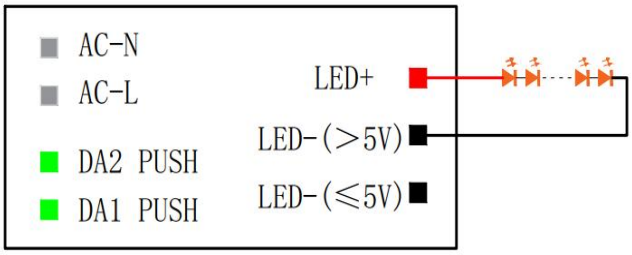

Wiring diagram for luminaire operating voltage > 5V

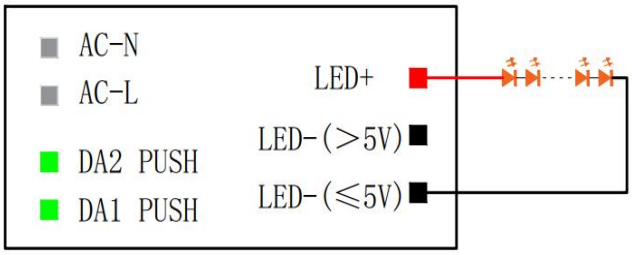

Wiring diagram for luminaire operating voltage ≤5V

DIP switch definition

Vo DC	I rated (CC)	1	2	3	4
2.5-38V	1050mA	-	-	-	-
2.5-40V	1000mA	-	-	-	ON
2.5-42V	950mA	-	-	ON	-
2.5-44V	900mA	-	-	ON	ON
2.5-47V	850mA	-	ON	-	-
2.5-50V	800mA	-	ON	-	ON
2.5-53V	750mA	-	ON	ON	-
2.5-54V	700mA	-	ON	ON	ON
2.5-54V	650mA	ON	-	-	-
2.5-54V	600mA	ON	-	-	ON
2.5-54V	550mA	ON	-	ON	-
2.5-54V	500mA	ON	-	ON	ON
2.5-54V	450mA	ON	ON	-	-

2.5-54V	400mA	ON	ON	-	ON
2.5-54V	350mA	ON	ON	ON	-
2.5-54V	*300mA	ON	ON	ON	ON

Note: "-": OFF, *: default current. When adjusting the output current via the DIP switch, please disconnect input AC first so as to use the DIP switch without the input AC connected.

Protective characteristics schematic diagrams

Schematic diagram of input undervoltage protection

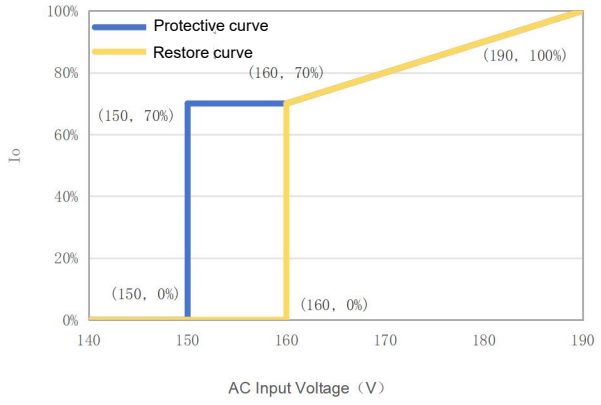

Schematic diagram of input overvoltage protection

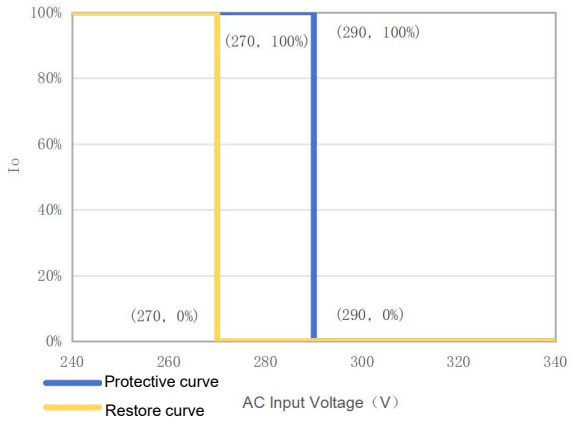

Protective characteristics

Protective type		Min.	Typ.	Max.	Introduction
Input undervoltage protection	Protective voltage	145Vac	150Vac	155Vac	When the input voltage is lower than the protective voltage, the light will be off.
	Restore voltage	156Vac	160Vac	165Vac	When the input voltage is higher than the restore voltage, the light can be automatically turned on.
Input overvoltage protection	Protective voltage	280Vac	290Vac	300Vac	When the input voltage is higher than the protective voltage, the light will be off.
	Restore voltage	261Vac	270Vac	278Vac	When the input voltage is lower than the restore voltage, the light can be automatically turned on.

Note: By default, only the input undervoltage and input overvoltage states are reported, and the light will not be turned off. It will enter the power-off protection mode only after the software settings are activated.

Capabilities

Dimmable	DALI/PUSH dimmable
Dimming range	1 ... 100%
Overload protection	Yes
Short circuit protection	Hiccup mode (self-recovery)
No-load protection	<59V[1)]

Suitable for fixtures with prot. class	I/II
Programming interface	DALI
Control interface	DALI
Number of channels	1 channel
CorridorDIM	Yes
EL	Yes
CLO	Yes
DALI Part 251 252 253	Yes

Note: 1) The output turns off after approximately 1.5s after no-load operation. To restore the output, connect the load properly, then power off it for 2s and restart the input.

Dimming function instructions

- **DALI dimming function**

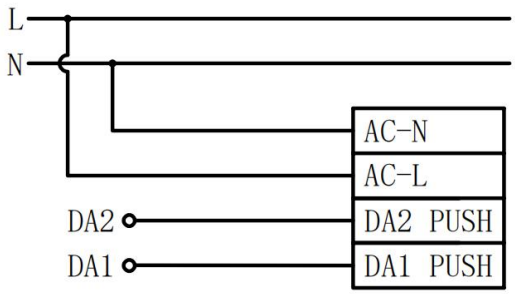

Wiring diagram of DALI dimming

① Default setting brightness is 100%.

② Connect DALI signal to DA1 PUSH and DA2 PUSH.

③ DALI protocol includes Max.16 scene groups.

④ Maximum number of LED drivers connected in parallel in DALI dimming mode: 64 pcs.

⑤ Minimum dimming depth of DALI dimming: 1%. (Iout max&38V)

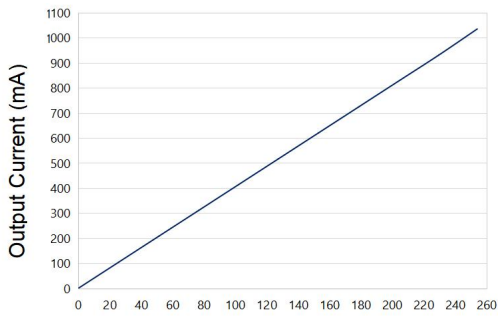

Linear dimming

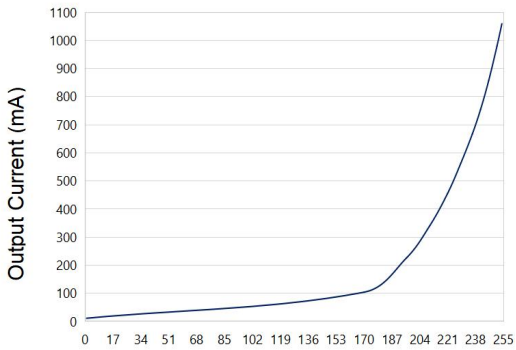

Logarithmic dimming

Note: The DALI and PUSH dimming functions cannot be used simultaneously; otherwise, the DALI dimmer will be damaged.

Between DALI dimming and LV power supply: Basic insulation

• PUSH dimming function

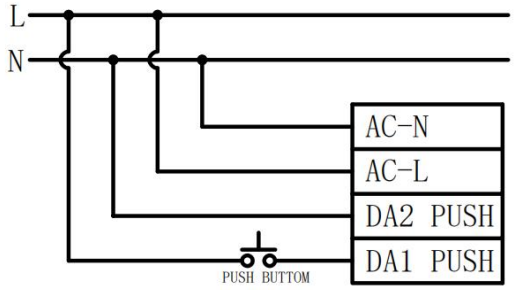

Wiring diagram of PUSH dimming

Switch from DALI mode to PUSH mode: short press PUSH switch to enable PUSH dimming function.

① Connect PUSH switch between AC-L and DA1 PUSH in series and connect DA2 PUSH to AC-N.

② Make sure that AC-L and AC-N are NOT directly connected to DA1 PUSH and DA2 PUSH terminals.

③ Make sure that PUSH switch is off before the AC is powered on; operate PUSH after the AC is powered on.

④ Make sure the PUSH switch is off before disconnecting the AC.

⑤ If you have any questions about the wiring and operation, please confirm with Lifud FAE.

⑥ Wrong wiring or operation may cause damage to the driver.

Operation	Duration	Function
Instant Push	0.1-0.5S	LED light on/off
Long Push	0.6-9S	LED light dims up/down
Reset Push	>9S	Reset the brightness of luminaire to 50%

① The PUSH operation won't cause any variations on LED driver if it's less than 0.1S.

② Minimum dimming depth of PUSH dimming: 1%. (Iout max&38V)

③ The PUSH dimming mode has the memory function in case of any power failure. When the LED driver is powered on again, the light will return to the previous state before power failure.

④ The present dimming direction of PUSH dimming is opposite to the former one.

⑤ In automatic mode, long press for more than 3 minutes to enter the corridor dimming function.

⑥ The above time allows for a deviation value of ±0.06 seconds.

• Corridor dimming function

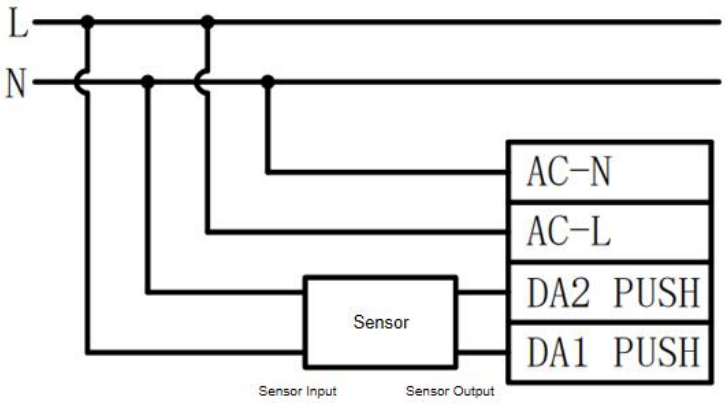

Wiring diagram of corridor dimming

Operations for entering corridor lighting mode

Approach 1: use Lifud programmer to enable the driver's corridor lighting mode and set parameters.

Approach 2: keep pressing PUSH for 3+ mins so as to switch to the corridor lighting mode.

Approach 3: keep the effective sensing signal for 3+ mins (set the sensor's hold time to 3+ mins) to enable the corridor lighting mode.

Remarks:

1. In the automatic detection mode, the driver can be switched from PUSH mode to corridor lighting mode by approach 2 and 3, and its brightness will dim up to 50%; long press for 3 mins and then it dims down first and then dims up, which means the driver has entered the corridor lighting mode.

2. After activating the corridor dimming mode, PUSH DIM is turned off.

3. In the case of AC input and any level of brightness in the corridor lighting mode, switching to DC and then returning to AC will restart the corridor lighting mode.

Operations for exiting corridor lighting mode

Approach 1: use Lifud programmer to choose other modes and exit corridor lighting mode.

Approach 2: connect the driver to the DALI master to send DALI command, and the driver will return to the DALI dimming mode.

Approach 3: connect the driver to the PUSH switch and continuously press the switch 10 times within 10 secs, and the driver will return to the PUSH dimming mode.

Remark:

1. The 3-sec or above single press or release will cause the press number to be counted as 0.

2. The approach 2 and 3 CANNOT be used if the corridor lighting mode of driver is set via Lifud programmer.

Working process of corridor dimming mode

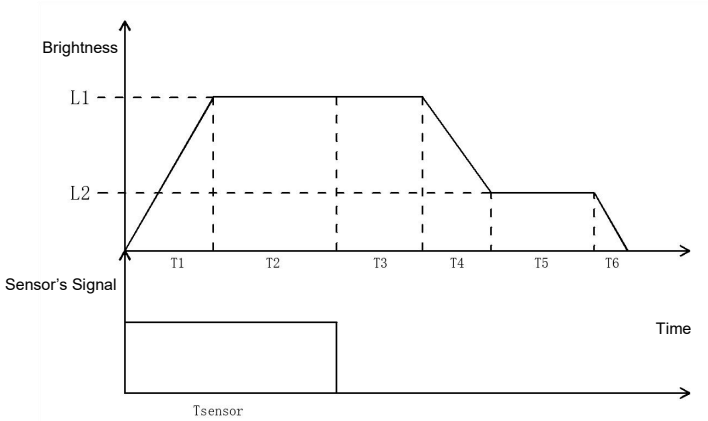

Symbol	Name	Default value	Available setting scope
T1	Fade-in time of sensing	1s	0-100s
T2	Holding time of sensing	Depends on sensor	Depends on sensor
T3	Waiting time of sensing	180s	0-59999s, 60000s (infinite)
T4	Fade-out time of sensing	5s	0-100s
T5	Unattended time	60000s (infinite)	0-59999s, 60000s (infinite)

T6	Fade-out off time	0s	0-100s
L1	Sensing brightness	100%	0-100%
L2	Unattended brightness	10%	0-100%

Emergency function instruction

The default output current is 15% Io max in the case of DC emergency input.

Emergency input voltage: 200-240Vdc. The DC voltage remains constant.

Emergency power supply current: 0.077-0.206A

Emergency output factor: EOFx: 1

Note:

1. The emergency output current can be set via Lifud programmer and programming software.

2. It can be set from 0 to 100%. When the input is less than 190VDC, the output is derated; when the input is 160VDC, it is reduced to about 70% of the peak.

3. If the emergency mode is off, input current is DC and the working mode is the same as that when the input is AC. Dimming function is normal.

4. In the case of mains input, the brightness is random when using PUSH dimming. When the driver enters the emergency lighting mode and then reconnects AC, the light brightness will remain the one set via PUSH switch when mains is connected.

5. In the case of mains input, the brightness is random when using DALI dimming. When the driver enters the emergency lighting mode and then reconnects AC, the light brightness will return to the brightness when DALI is powered on.

In the case of mains input, the brightness is random when using DALI dimming. When the driver enters the emergency lighting mode and then reconnects AC (with AC power interruption ≥3s), the light brightness will return to the brightness when DALI is powered on. Otherwise, it will maintain the previous DALI brightness level.

6. After enabling the overvoltage and undervoltage protection function: In undervoltage protection, the power will be off when it is <160Vdc and restart when it is >170Vdc; in overvoltage protection, the power will be off when it is >295Vdc and restart when it is <285Vdc. (Deviation: ±5V)

Programmer tools and software

Product	Name	Brand	Model	Software
	Lifud programmer	LIFUD	LF-SCS080C	Lifud SmartSet

Read/write and parameter configuration

Programming project	Default settings	Parameters settings	Read/Write
Production information	-	No	Read
Output current	300mA (default)	/	/
Operating mode	Automatic detection (DALI/PUSH)	Yes	Read/Write
EL	15% (default)	Yes	Read/Write
CorridorDIM	Inactivated	Yes	Read/Write

CLO	Inactivated	Yes	Read/Write
DALI Part 251	Activated	Yes	Read/Write
DALI Part 252	Activated	Yes	Read/Write
DALI Part 253	Activated	Yes	Read/Write

Function instructions

①Lifud programmer

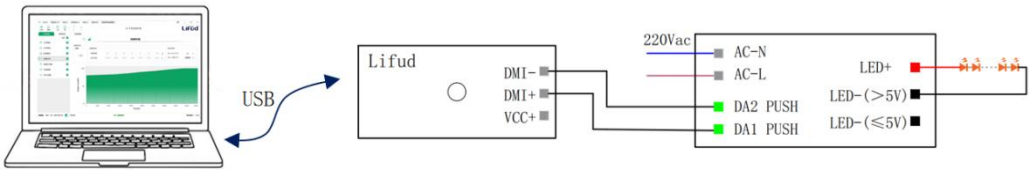

PC Software　　Lifud Programmer　　LED Driver

Certificates & standards

Approval marks	ENEC, CE, CB, EL, RCM, DALI-2, SAA
Standards	EN 61347-2-13; EN 61347-1; EN 62384; EN 62493; EN 55015; EN 61547; EN 61000-3-2; EN 61000-3-3; IEC61347-1; IEC61347-2-13; EN IEC 61347-2-13 Annex J; AS 61347.2.13 & AS/NZS 61347.1
Type of protection	IP20

Logistical data

Product	Packaging unit (Pieces/Unit)	Dimensions (L*W*H)	Volume	Gross weight
LF-BCD040C-1050-54	96	385mm*285mm*210mm	23.04dm³	10.83kg±5%

Test equipment & condition

Test equipment	AC power source: CHROMA6530, digital power meter: CHROMA66202, oscilloscope: Tektronix DPO3014, DC electronic load: M9712B, LED board, constant temperature and humidity chamber, lightning surge generator: Everfine EMS61000-5B, rapid group pulse generator: Everfine EMS61000-4A, spectroanalyzer: KH3935, hi-pot tester: EEC SE7440, flicker tester (flicker-free coefficient test): Everfine LFA-3000, etc.

If there are no special remarks, the above parameters are tested at the ambient temperature of 25℃, humidity of 50%, maximum output load (1050mA&38V) and input voltage of 230Vac/50Hz.

Additional information

1. It is recommended that user install the over voltage protection, under voltage protection and surge protection devices in the power supply circuits of light fixtures to ensure electricity safety.

2. The LED driver used in combination with the end device is one of the accessories of the whole light fixture, and the EMC of the whole light fixture is not only susceptible to the driver itself, but to the LED light fixture and the whole light fixture's wiring. Thus, the manufacturer of LED light fixture should re-confirm the EMC of the whole light fixture before the whole light fixture is finished.

3. The number of LED drivers that can be connected to a circuit breaker and the inrush current are tested under the same conditions.

4. The PC cover, casing and end cap for assembling the LED driver in the light fixture must meet the fire rating of UL94-V0 or above.

5. Lifud Technology Co., Ltd. reserves the right to interpret any content of this specification.

Transportation & storage

Suitable transportation means: vehicles, boats and aeroplanes.

In transit, it is necessary to prepare awnings for rain or sun protection. Moreover, please keep civilized loading and unloading to prevent the vibration or impact on LED driver as much as possible.

The storage of LED driver shall conform to the standard of Class I environment.

1. When using the products which have been stored for more than 6 months, please re-test their electrical parameters firstly by powering on. Do not use them unless they are tested to be qualified.

2. When using the products which have been stored for 6 to 12 months, please run them on power for more than 2 hours firstly.

3. When using the products which have been stored for more than 12 months, please conduct an actual assessment of quality risks firstly. Direct use is not recommended.

Cautions

Please use Lifud LED driver according to its parameters in the specification, otherwise the LED driver may malfunction.

Using any incompatible light fixtures or those that have not been certified may cause fire, explosion or other risks.

Man-made damage is beyond the scope of Lifud warranty service.

Disclaimer

Subject to change without notice. Errors and omissions excepted. Always make sure to use the most recent release.