LT-820-5A
16bit DMX/RDM CV DECODER

FC CE RoHS warranty 5 years ISO9001:2008

LT-820-5A is the world's first OLED display DMX decoder, with standard RDM remote device management protocol, supports DMX512 signal bi-directional communication, achieves remote management of reading and writing DMX address (DMX master controller must recognize RDM protocol). Outstanding performance with following features:

- OLED real-time display.
- 16bit / 8bit input.
- 3 dimming curve optional.
- Short circuit / Over current / Over-heat protection.
- Built-in protection circuit of resistance to lightning stroke and ESD static electricity.

1. Product Parameter:

LT-820-5A DMX/RDM CV Decoder

Input signal:	DMX512/RDM	Protection:	Short circuit/ Over current
Input voltage:	5~24Vdc		Over-heat protection
Load current:	5A × 4CH / 6A × 3CH Max. 20A	Working temp.:	-30°C~55°C
Output power:	(0...25~120W) × 4CH Max. 480W	Dimensions:	L175×W44×H30mm
Dimming range:	0~100%	Package size:	L178×W48×H33mm
		Weight (G.W.):	175g

2. Product Size:

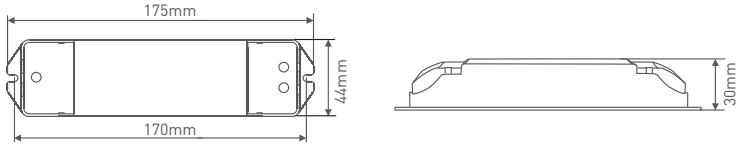

3. Main Component Description:

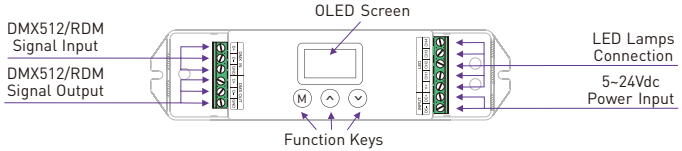

4. OLED Screen Interface Diagram:

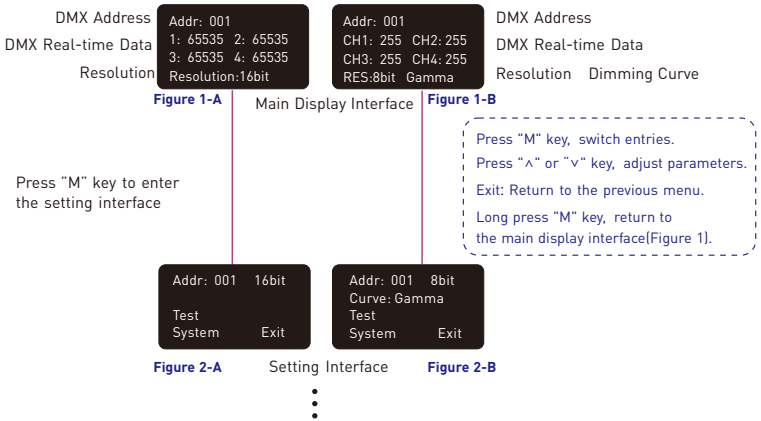

Please refer to the OLED display for detailed information.

LT-820-5A will run the test scenes only when you enter "self-testing" interface.
Screensaver enable time: undo for 2 min in the main display interface (Figure 1).

[Restore the default parameters] : In the main display interface(Figure 1), Long press "M" "∧" "∨" 3 keys simultaneously, LT-820-5A will restore the default parameters, and the screen display "Device restore default" for 2 seconds, then it will return to the main display interface (Figure 1).

5. Wiring Diagram:

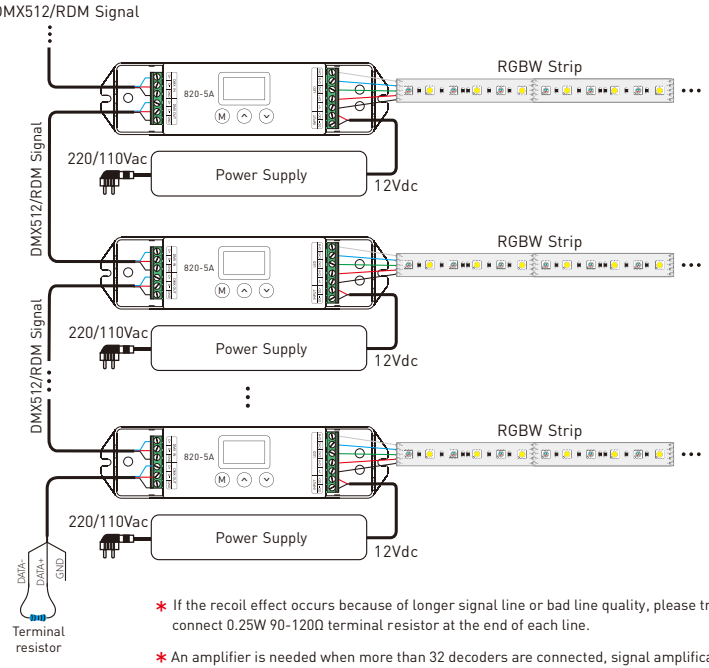

* If the recoil effect occurs because of longer signal line or bad line quality, please try to connect 0.25W 90-120Ω terminal resistor at the end of each line.

* An amplifier is needed when more than 32 decoders are connected, signal amplification should not be more than 5 times continuously.

LED Voltage Chosen:

This controller can wire to the LED lamps with a voltage ranges from 5~24Vdc if the input voltage equals output voltage, for example:

the lamp with 5V working voltage, please use 5V power supply,

the lamp with 12V working voltage, please use 12V power supply,

the lamp with 24V working voltage, please use 24V power supply.

LED Power Chosen:

This controller can load a current ranges from 0~20A,

a 5V lamp may load a power ranges from 0~100W;

a 12V lamp may load a power ranges from 0~240W;

a 24V lamp may load a power ranges from 0~480W.

The power chosen must be 20% higher than the actual load.

The principle for power chosen: the more the better.

6. System Connection Diagram:

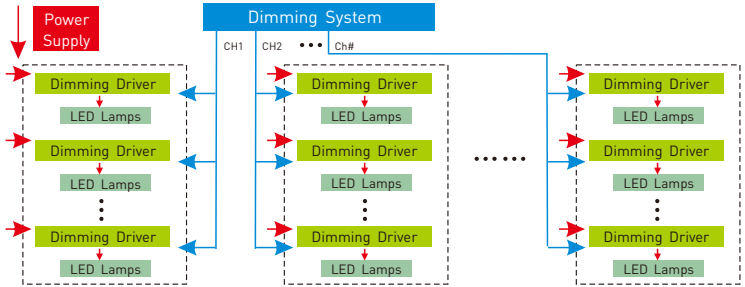

7. Attention:

7.1 The product shall be installed and serviced by the qualified person.

7.2 This product is non-waterproof, please avoid the sun and rain. When installed outdoors, please ensure it is mounted in a water proof enclosure.

7.3 Good heat dissipation will prolong the working life of the controller. Please ensure good ventilation.

7.4 Please check if the output voltage of the LED power supply used comply with the working voltage of the product.

7.5 Please ensure that adequate sized cable is used from the controller to the LED lights to carry the current. Please also ensure that the cable is secured tightly in the connector.

7.6 Ensure all wire connections and polarities are correct before applying power to avoid any damages to the LED lights.

7.7 If a fault occurs please return the product to your supplier. Do not attempt to fix this product by yourself.

8. Warranty Agreement:

8.1 We provide lifelong technical assistance with this product:

- A 5-year warranty is given from the date of purchase. The warranty is for free repair or replacement if cover manufacturing faults only.
- For faults beyond the 5-year warranty, we reserve the right to charge for time and parts.

8.2 Warranty exclusions below:

- Any man-made damages caused from improper operation, or connecting to excess voltage and overloading.
- The product appears to have excessive physical damage.
- Damage due to natural disasters and force majeure.
- Warranty label, fragile label and unique barcode label have been damaged.
- The product has been replaced by a brand new product.

8.3 Repair or replacement as provided under this warranty is the exclusive remedy to the customer. LTECH shall not be liable for any incidental or consequential damages for breach of any stipulation in this warranty.

8.4 Any amendment or adjustment to this warranty must be approved in writing by LTECH only.

★This manual only applies to this model. LTECH reserves the right to make changes without prior notice.