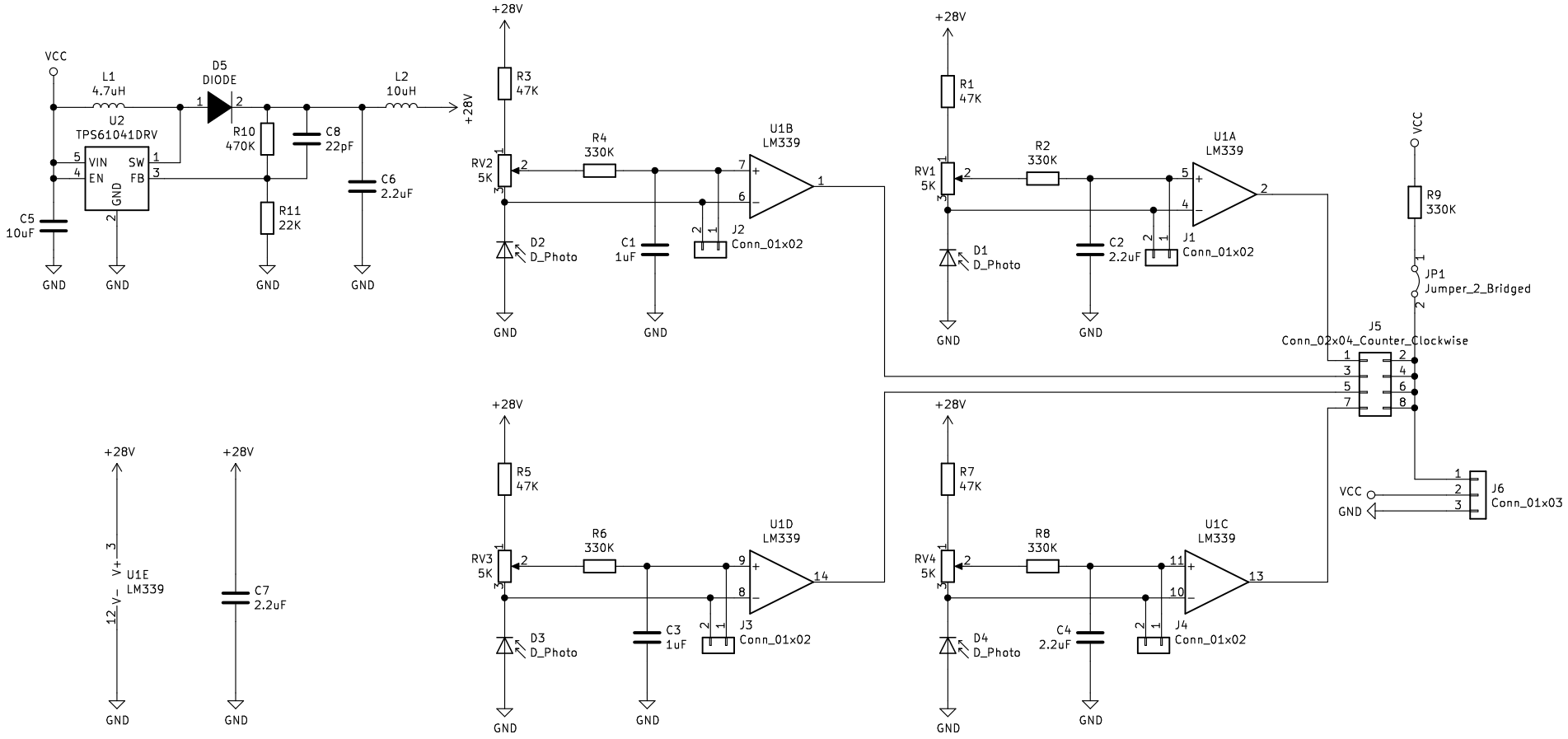

Title: LGO Light Gate Sensor	**td0g.ca**
Sheet: /	File: LightGate.sch
Date: 2020-03-19	**Rev: 3**
KiCad E.D.A. eeschema (5.1.4)-1	Id: 1/1