ITEM NO.	PART NUMBER	DESCRIPTION	QTY.
1	Side Cover	Translational Wheel SA	1
2	60355K45	EEB 3-2Z Ball Bearing	1
3	90640A129	Low-Strength Steel Nylon-Insert Locknut	12
4	Belt Gear	Belt Gear	1
5	HX-SHCS 0.25-20x1x1-C		4

REVISIONS				
ZONE	REV.	DESCRIPTION	DATE	APPROVED

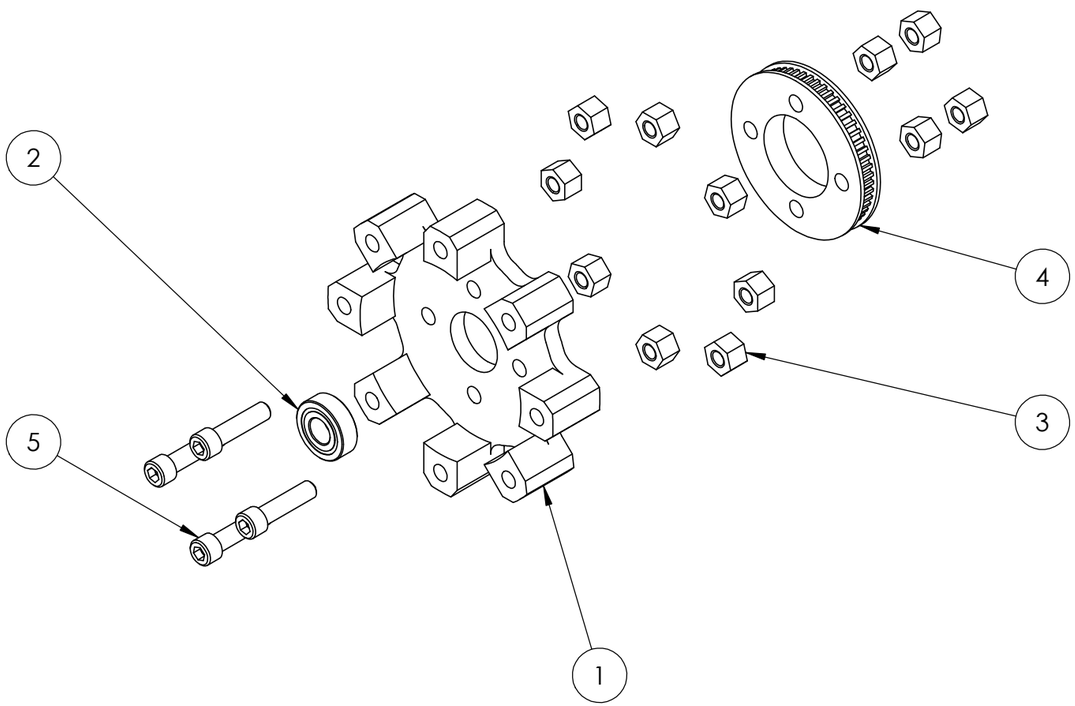

EXPLODED VIEW SCALE 1:2

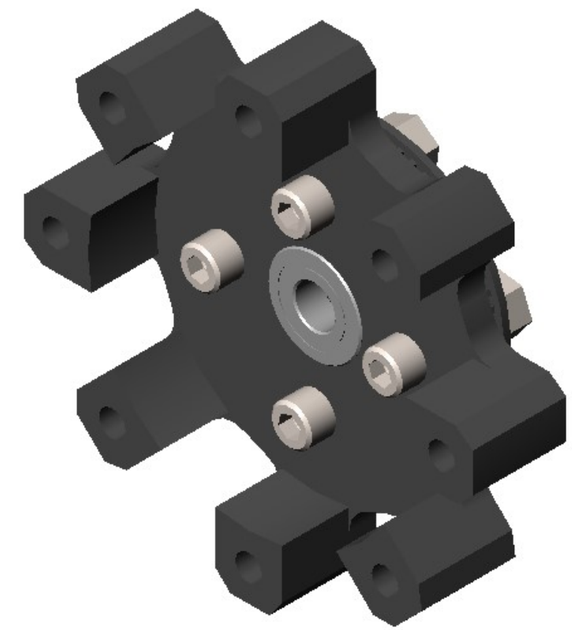

PROPRIETARY AND CONFIDENTIAL

THE INFORMATION CONTAINED IN THIS DRAWING IS THE SOLE PROPERTY OF CHAFFEY COLLEGE. ANY REPRODUCTION IN PART OR AS A WHOLE WITHOUT THE WRITTEN PERMISSION OF CHAFFEY COLLEGE IS PROHIBITED.

NEXT ASSY	USED ON
APPLICATION	

UNLESS OTHERWISE SPECIFIED:

DIMENSIONS ARE IN INCHES
TOLERANCES:
FRACTIONAL ± 1/16
ANGULAR: MACH ±.5 BEND ±1
TWO PLACE DECIMAL ±.03
THREE PLACE DECIMAL ±.010

INTERPRET GEOMETRIC TOLERANCING PER: ANSI Y14.5

MATERIAL

FINISH

DO NOT SCALE DRAWING

	NAME	DATE
DRAWN	GB	5/15/2022
CHECKED		
ENG APPR.		
MFG APPR.		
Q.A.		

COMMENTS:

CHAFFEY COLLEGE

TITLE:

BASE SA

SIZE	DWG. NO.	REV
B	SA005	-

SCALE: 1:1 WT: SHEET 1 OF 1

SOLIDWORKS Educational Product. For Instructional Use Only.