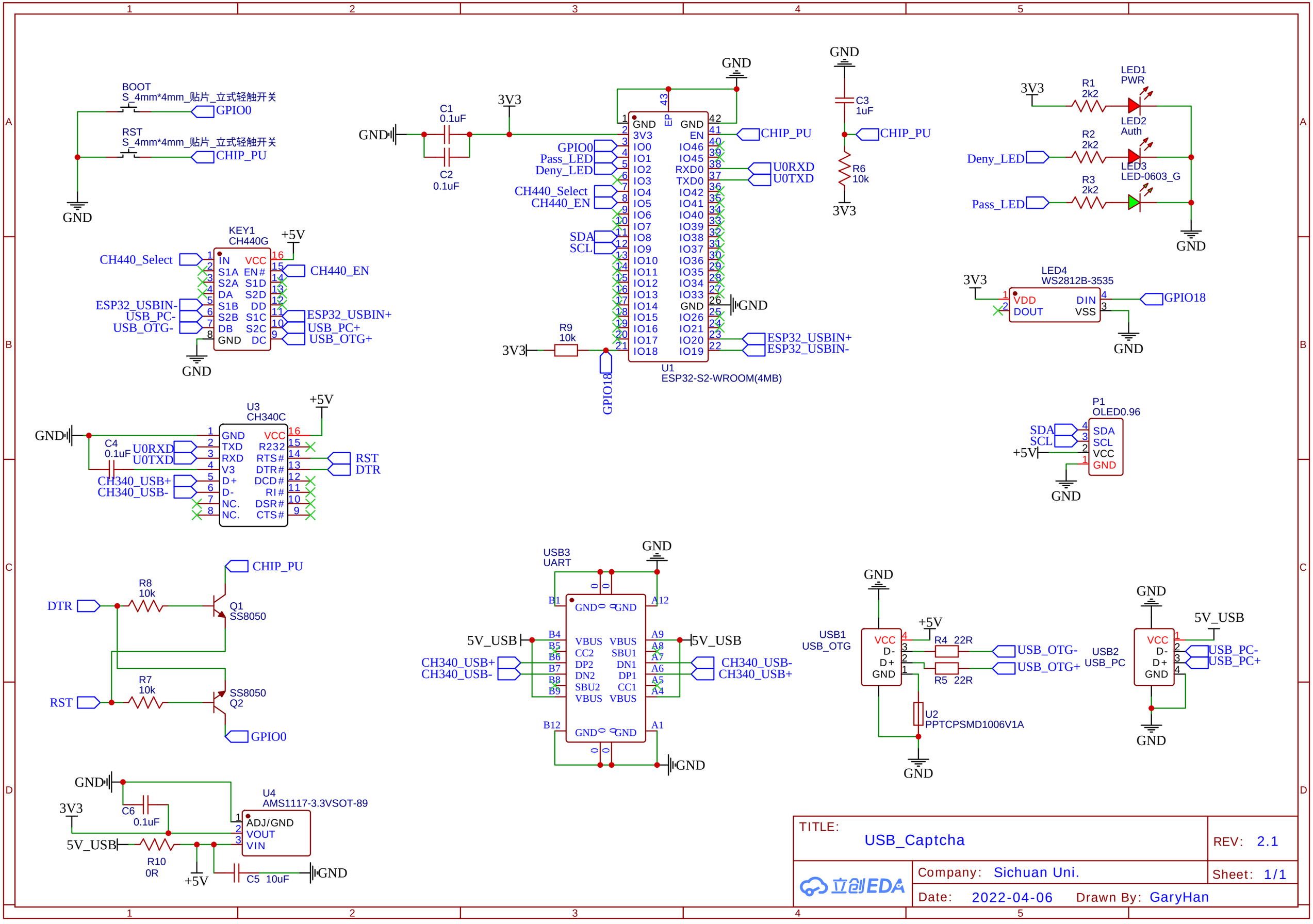
BOOT
S_4mm*4mm_贴片_立式轻触开关
GPIO0
RST
S_4mm*4mm_贴片_立式轻触开关
CHIP_PU
GND
C1
0.1uF
C2
0.1uF
3V3
U1
ESP32-S2-WROOM(4MB)
GPIO0
Pass_LED
Deny_LED
CH440_Select
CH440_EN
SDA
SCL
U0RXD
U0TXD
ESP32_USBIN+
ESP32_USBIN-
R9
10k
GPIO18
C3
1uF
R6
10k
LED1
PWR
LED2
Auth
LED3
LED-0603_G
R1
2k2
R2
2k2
R3
2k2
LED4
WS2812B-3535
VDD
DOUT
DIN
VSS
KEY1
CH440G
+5V
CH440_Select
CH440_EN
ESP32_USBIN-
USB_PC-
USB_OTG-
ESP32_USBIN+
USB_PC+
USB_OTG+
U3
CH340C
GND
TXD
RXD
V3
D+
D-
NC.
VCC
R232
RTS#
DTR#
DCD#
RI#
DSR#
CTS#
C4
0.1uF
CH340_USB+
CH340_USB-
RST
DTR
P1
OLED0.96
SDA
SCL
VCC
GND
R8
10k
R7
10k
Q1
SS8050
SS8050
Q2
USB3
UART
VBUS
CC2
DP2
DN2
SBU2
SBU1
DN1
DP1
CC1
USB1
USB_OTG
R4 22R
R5 22R
U2
PPTCPSMD1006V1A
USB2
USB_PC
5V_USB
U4
AMS1117-3.3VSOT-89
ADJ/GND
VOUT
VIN
C6
0.1uF
R10
0R
C5 10uF
TITLE:
USB_Captcha
REV: 2.1
Company: Sichuan Uni.
Sheet: 1/1
Date: 2022-04-06
Drawn By: GaryHan