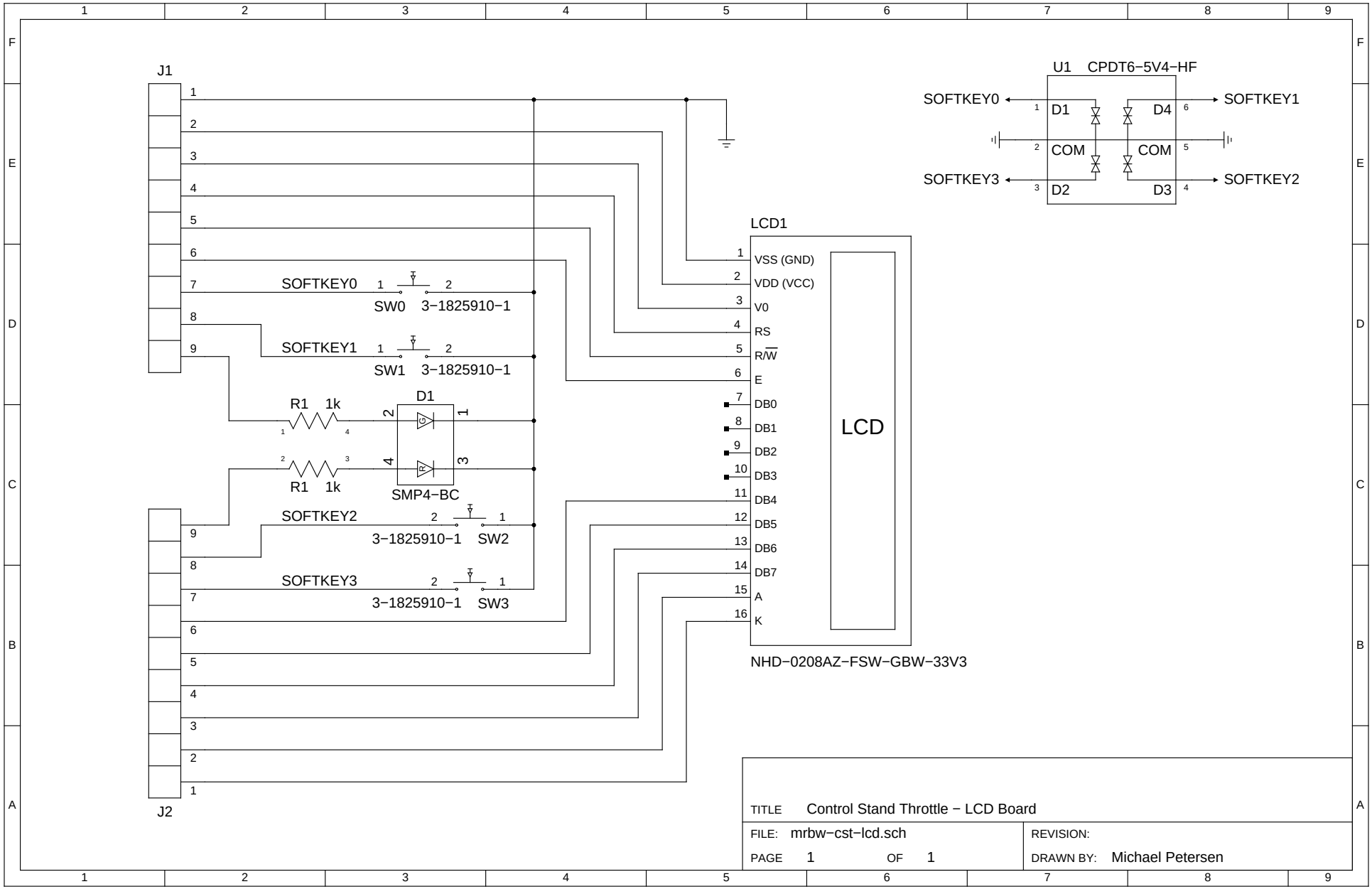
J1
J2
SOFTKEY0
SW0
3−1825910−1
SOFTKEY1
SW1
3−1825910−1
R1 1k
D1
SMP4−BC
SOFTKEY2
3−1825910−1
SW2
SOFTKEY3
3−1825910−1
SW3
LCD1
VSS (GND)
VDD (VCC)
V0
RS
R/W
E
DB0
DB1
DB2
DB3
DB4
DB5
DB6
DB7
A
K
LCD
NHD−0208AZ−FSW−GBW−33V3
U1 CPDT6−5V4−HF
SOFTKEY0
SOFTKEY1
SOFTKEY3
SOFTKEY2
D1
D2
D3
D4
COM
COM
TITLE Control Stand Throttle − LCD Board
FILE: mrbw−cst−lcd.sch
REVISION:
PAGE 1 OF 1
DRAWN BY: Michael Petersen