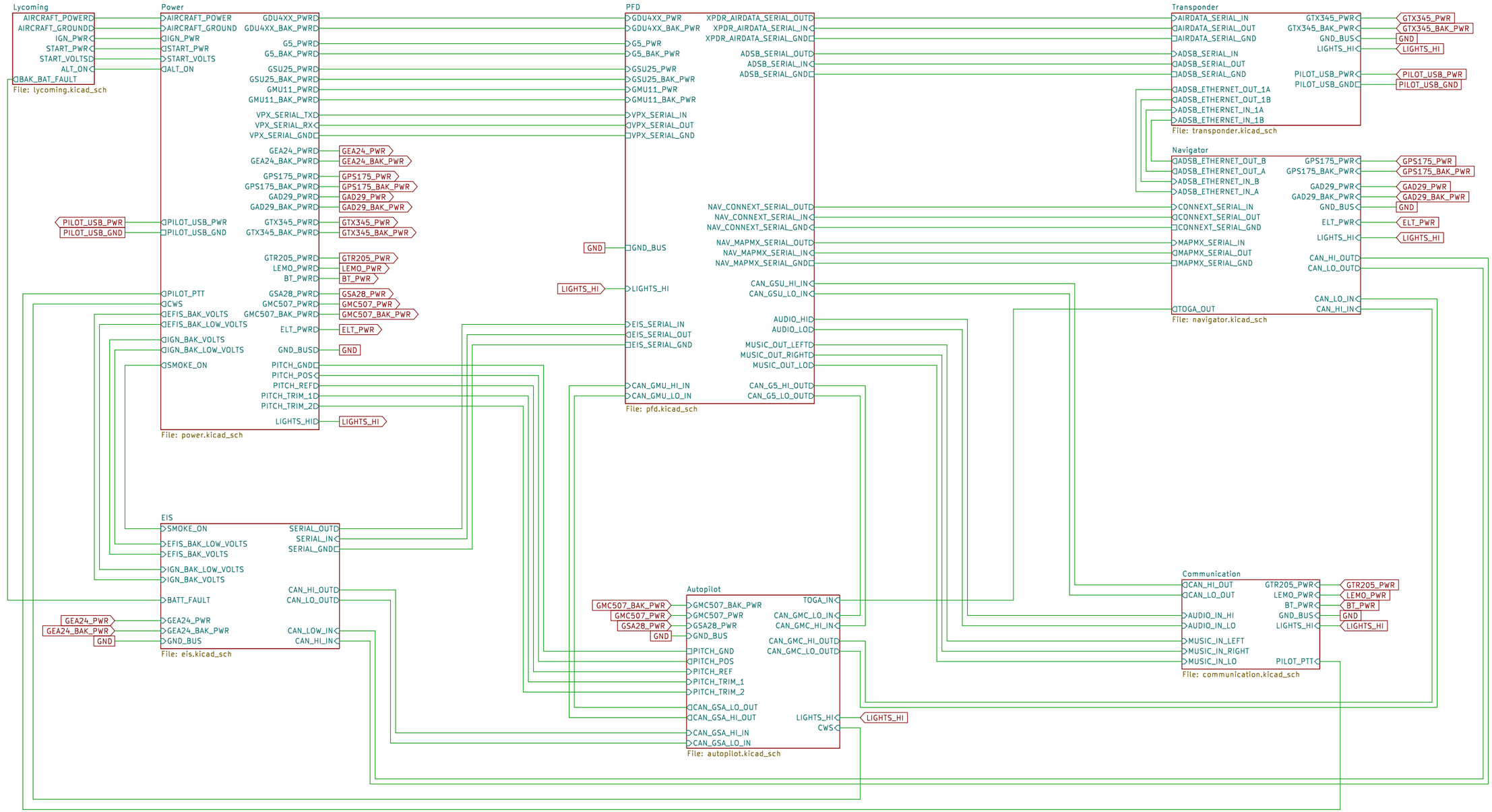

Overview

File: overview.kicad_sch

Canbus Order
GTR205x
GSU25
GDU460
G5
GMC507
GAD29
GEA24
GSA28 Roll
GSA28 Pitch
GSA28 Yaw
GMU11

Connectors Needed
DT4 x1
DT6 x3
DTM3 x1
DTM4 x3
DTM6 x2
DTM8 x5
DTP4 x1

RS232 Colors "Source Side"
Transmit: White/Blue
Receive: White/Orange
Ground: White

Canbus Colors
Lo: White
Hi: Blue

N78HR

Sheet: /
File: electrical.kicad_sch

Title: Electrical Overview

Size: B	Date: 2026-04-02	**Rev: 1.2.13**
KiCad E.D.A. 9.0.7		Id: 2/10

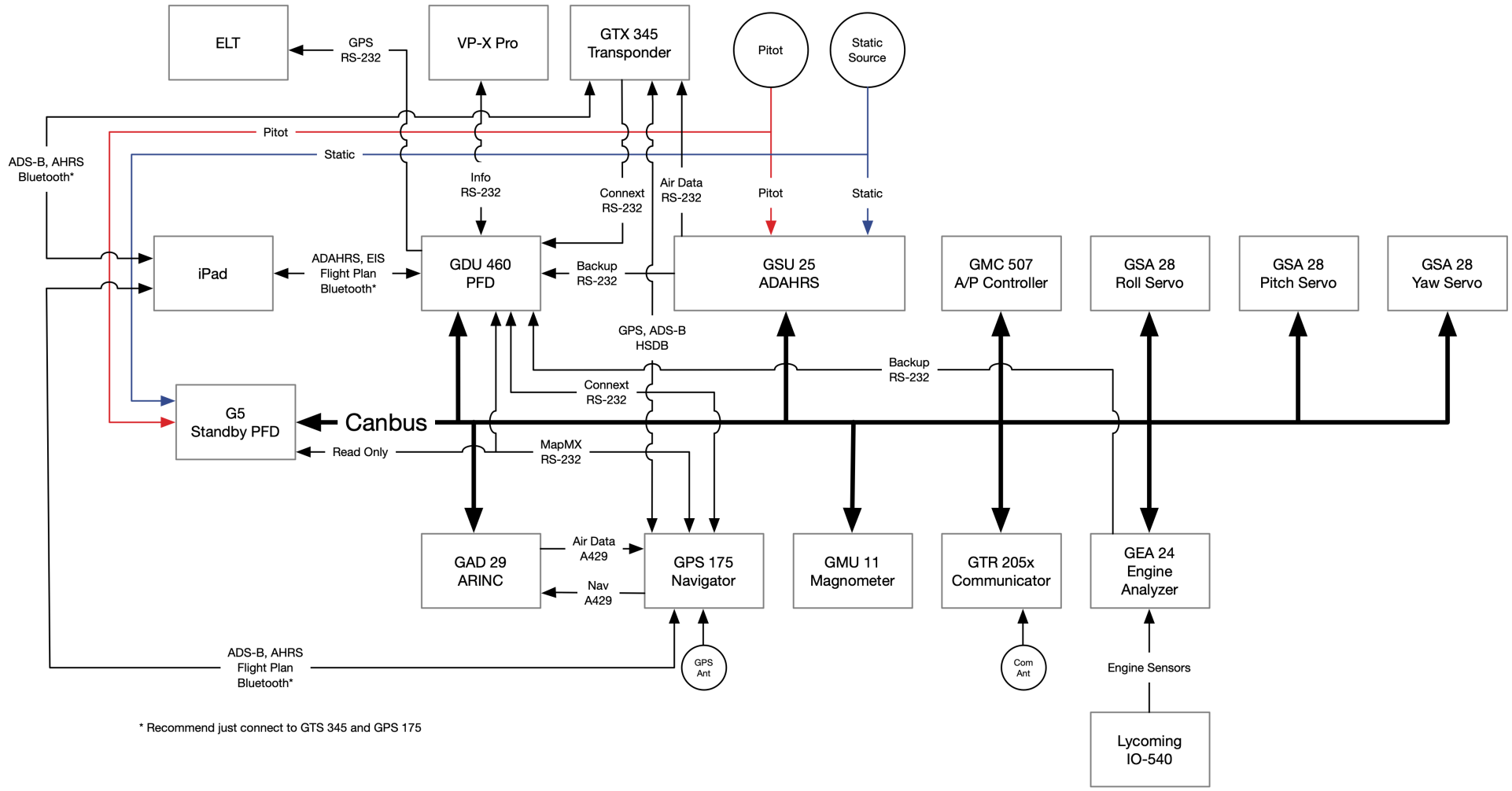

* Recommend just connect to GTS 345 and GPS 175

N78HR

Sheet: /Overview/
File: overview.kicad_sch

Title: System Overview

Size: USLetter	Date: 2025-11-29	**Rev: 1.2.9**
KiCad E.D.A. 9.0.7		Id: 1/10

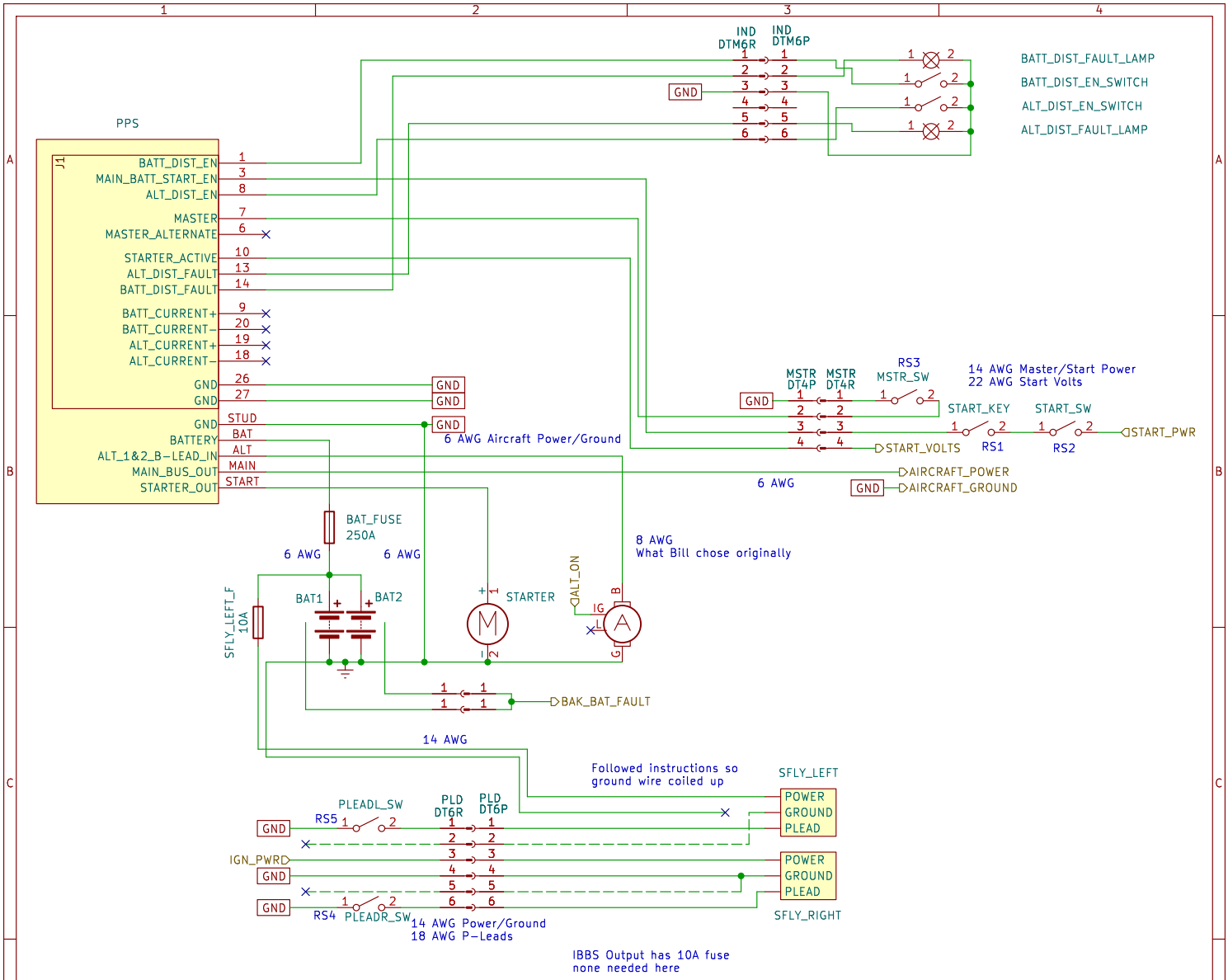

N78HR

Sheet: /Lycoming/
File: lycoming.kicad_sch

Title: Lycoming

Size: A	Date: 2026−04−02	**Rev: 1.2.13**
KiCad E.D.A. 9.0.7		Id: 3/10

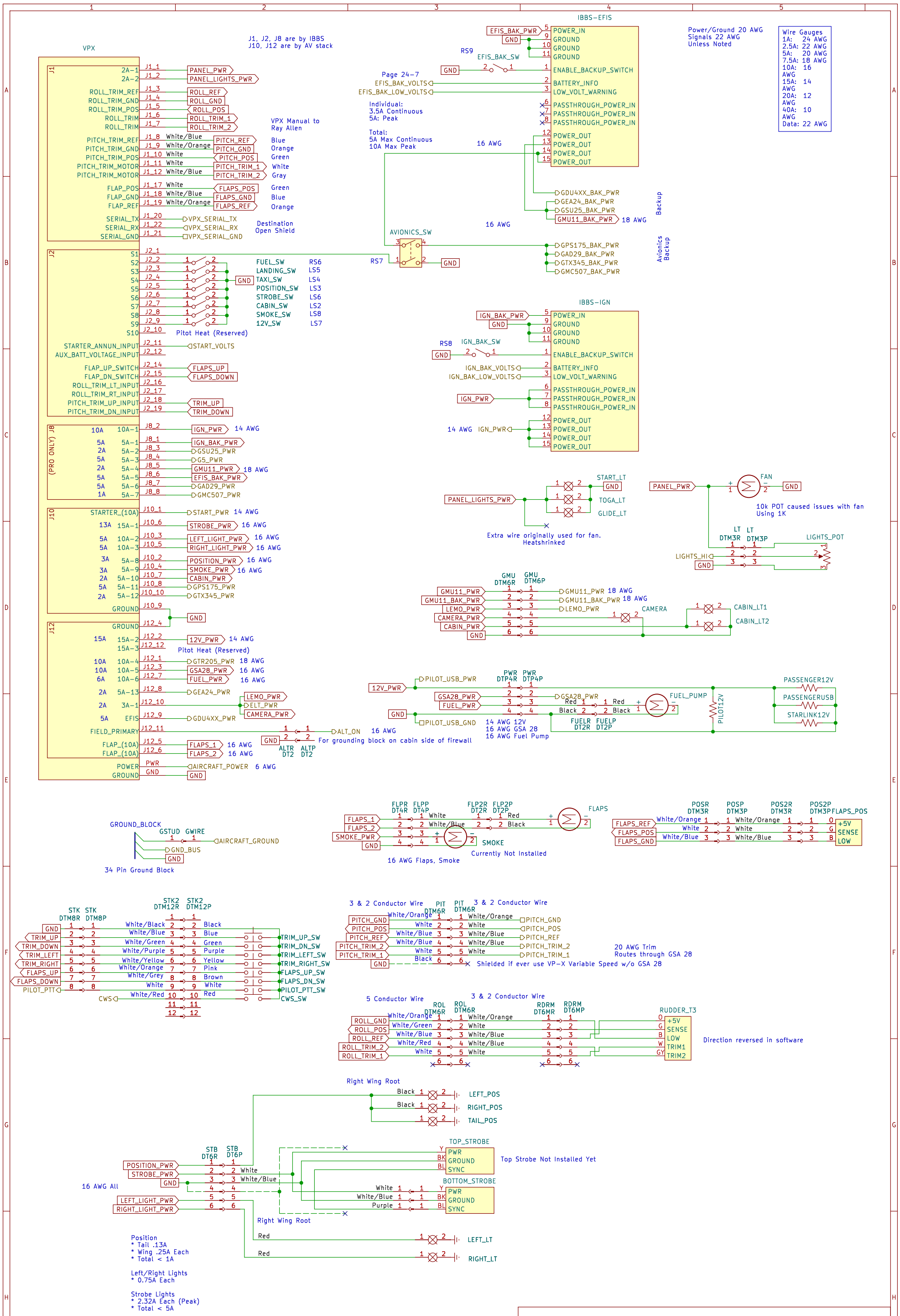

N78HR

Sheet: /Power/

File: power.kicad_sch

Title: Power Distribution

Size: B	Date: 2025-11-19	Rev: 1.2.8
KiCad E.D.A. 9.0.7		Id: 4/10

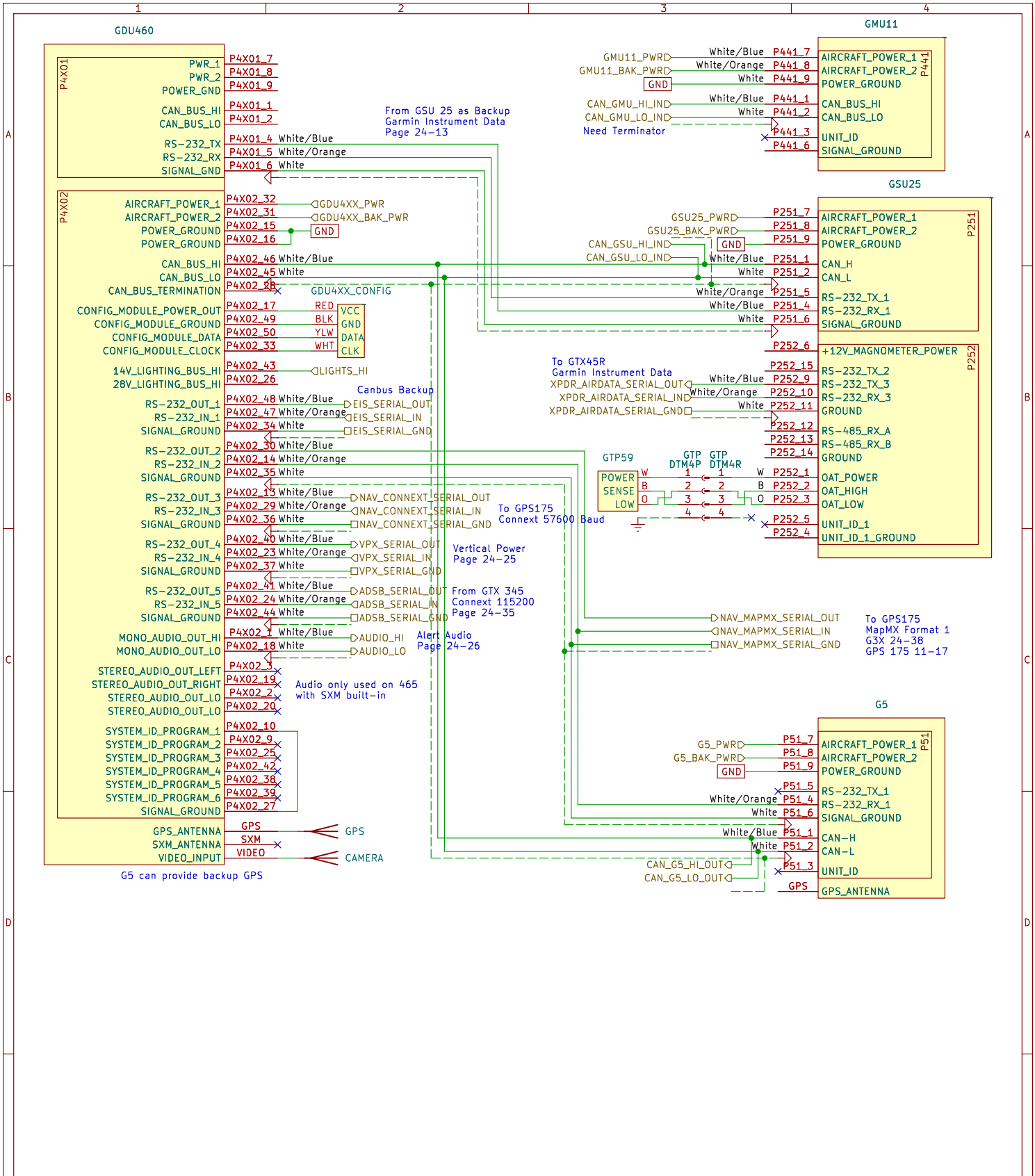

N78HR

Sheet: /PFD/

File: pfd.kicad_sch

Title: PFD & ADAHRS

Size: USLetter	Date: 2026-04-02	**Rev: 1.2.12**
KiCad E.D.A. 9.0.7		Id: 5/10

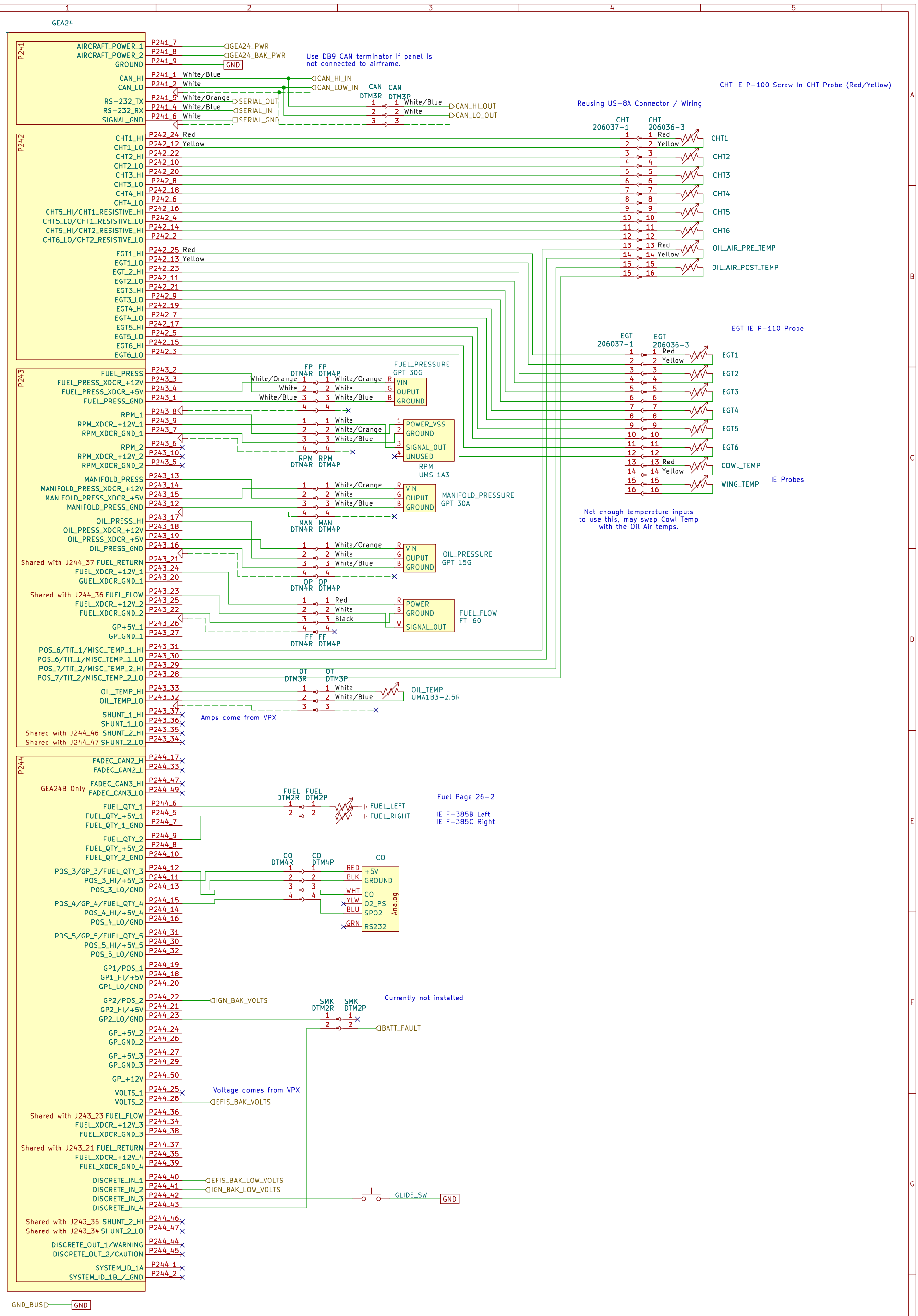

N78HR

Sheet: /EIS/
File: eis.kicad_sch

Title: EIS

Size: USLedger	Date: 2026-04-02	Rev: 1.2.13
KiCad E.D.A. 9.0.7		Id: 6/10

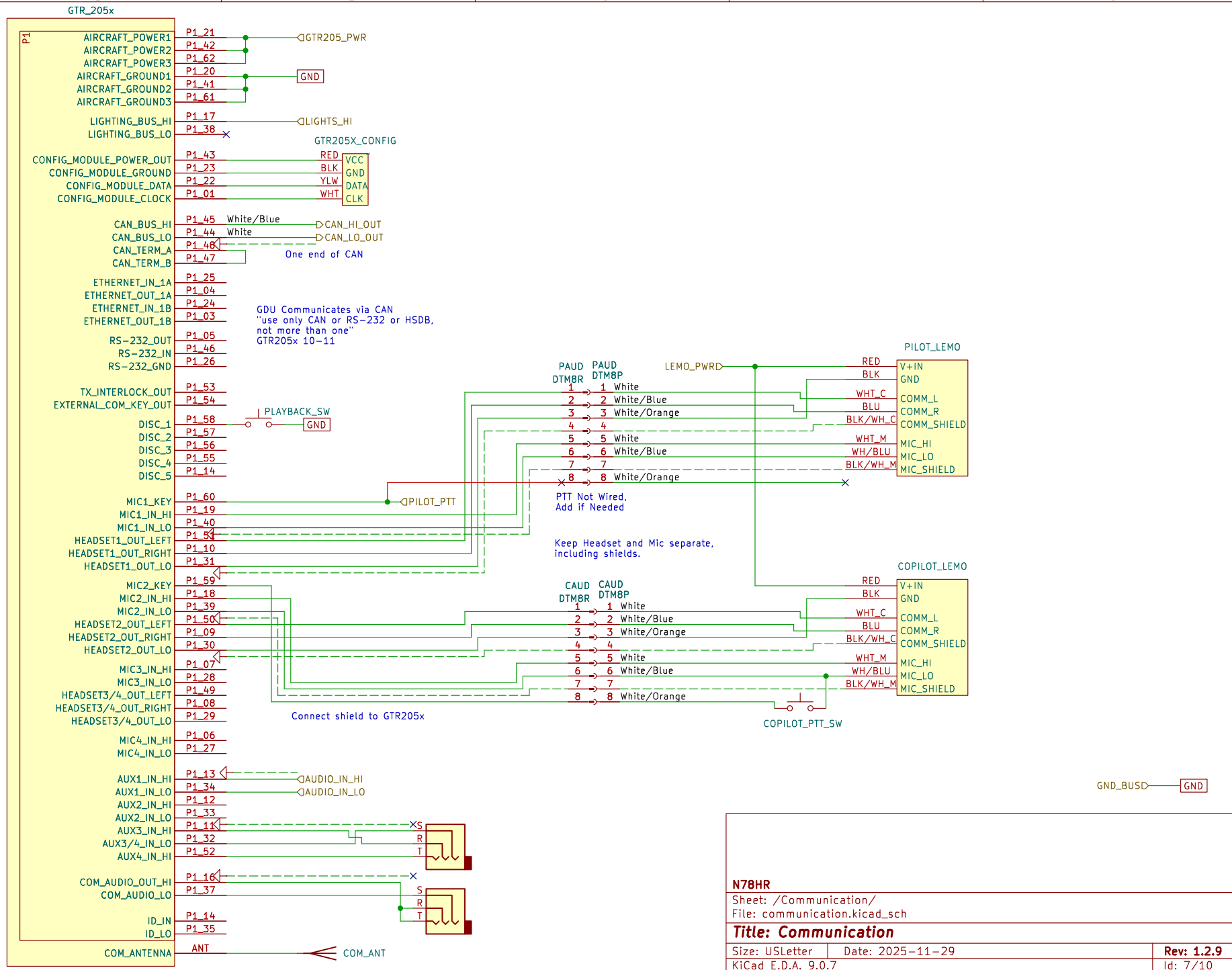

N78HR

Sheet: /Communication/

File: communication.kicad_sch

Title: Communication

Size: USLetter	Date: 2025-11-29	**Rev: 1.2.9**
KiCad E.D.A. 9.0.7		Id: 7/10

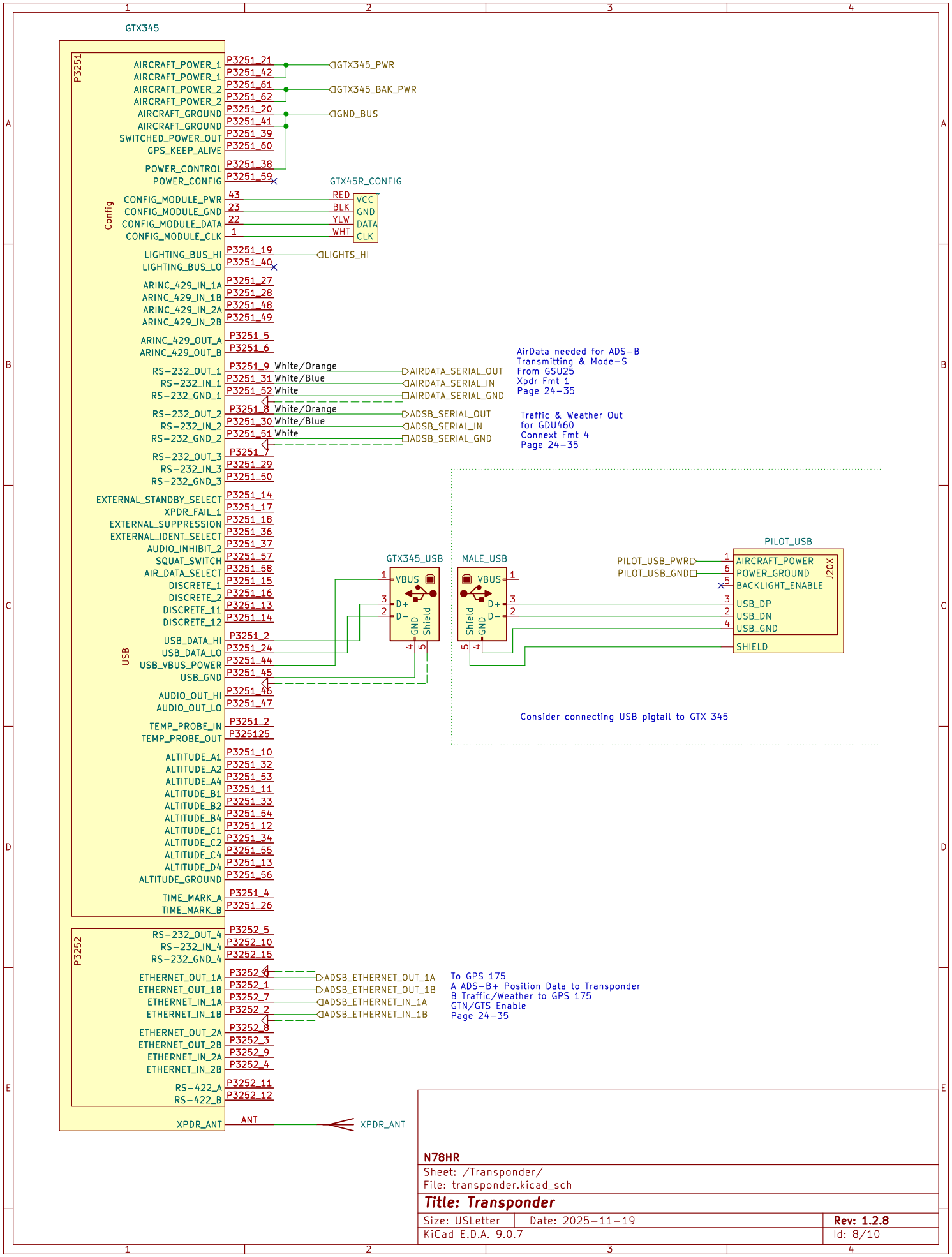
GTX345
P3251
AIRCRAFT_POWER_1 P3251_21
AIRCRAFT_POWER_1 P3251_42
AIRCRAFT_POWER_2 P3251_61
AIRCRAFT_POWER_2 P3251_62
AIRCRAFT_GROUND P3251_20
AIRCRAFT_GROUND P3251_41
SWITCHED_POWER_OUT P3251_39
GPS_KEEP_ALIVE P3251_60
POWER_CONTROL P3251_38
POWER_CONFIG P3251_59
GTX345_PWR
GTX345_BAK_PWR
GND_BUS
GTX45R_CONFIG
Config
CONFIG_MODULE_PWR 43 RED VCC
CONFIG_MODULE_GND 23 BLK GND
CONFIG_MODULE_DATA 22 YLW DATA
CONFIG_MODULE_CLK 1 WHT CLK
LIGHTING_BUS_HI P3251_19
LIGHTING_BUS_LO P3251_40
LIGHTS_HI
ARINC_429_IN_1A P3251_27
ARINC_429_IN_1B P3251_28
ARINC_429_IN_2A P3251_48
ARINC_429_IN_2B P3251_49
ARINC_429_OUT_A P3251_5
ARINC_429_OUT_B P3251_6
RS-232_OUT_1 P3251_9 White/Orange AIRDATA_SERIAL_OUT
RS-232_IN_1 P3251_31 White/Blue AIRDATA_SERIAL_IN
RS-232_GND_1 P3251_52 White AIRDATA_SERIAL_GND
AirData needed for ADS-B
Transmitting & Mode-S
From GSU25
Xpdr Fmt 1
Page 24-35
RS-232_OUT_2 P3251_8 White/Orange ADSB_SERIAL_OUT
RS-232_IN_2 P3251_30 White/Blue ADSB_SERIAL_IN
RS-232_GND_2 P3251_51 White ADSB_SERIAL_GND
Traffic & Weather Out
for GDU460
Connext Fmt 4
Page 24-35
RS-232_OUT_3 P3251_7
RS-232_IN_3 P3251_29
RS-232_GND_3 P3251_50
EXTERNAL_STANDBY_SELECT P3251_14
XPDR_FAIL_1 P3251_17
EXTERNAL_SUPPRESSION P3251_18
EXTERNAL_IDENT_SELECT P3251_36
AUDIO_INHIBIT_2 P3251_37
SQUAT_SWITCH P3251_57
AIR_DATA_SELECT P3251_58
DISCRETE_1 P3251_15
DISCRETE_2 P3251_16
DISCRETE_11 P3251_13
DISCRETE_12 P3251_14
USB
USB_DATA_HI P3251_2
USB_DATA_LO P3251_24
USB_VBUS_POWER P3251_44
USB_GND P3251_45
GTX345_USB
VBUS
D+
D-
GND
Shield
MALE_USB
PILOT_USB
PILOT_USB_PWRD
PILOT_USB_GND
AIRCRAFT_POWER
POWER_GROUND
BACKLIGHT_ENABLE
J20X
USB_DP
USB_DN
USB_GND
SHIELD
AUDIO_OUT_HI P3251_46
AUDIO_OUT_LO P3251_47
Consider connecting USB pigtail to GTX 345
TEMP_PROBE_IN P3251_2
TEMP_PROBE_OUT P325125
ALTITUDE_A1 P3251_10
ALTITUDE_A2 P3251_32
ALTITUDE_A4 P3251_53
ALTITUDE_B1 P3251_11
ALTITUDE_B2 P3251_33
ALTITUDE_B4 P3251_54
ALTITUDE_C1 P3251_12
ALTITUDE_C2 P3251_34
ALTITUDE_C4 P3251_55
ALTITUDE_D4 P3251_13
ALTITUDE_GROUND P3251_56
TIME_MARK_A P3251_4
TIME_MARK_B P3251_26
P3252
RS-232_OUT_4 P3252_5
RS-232_IN_4 P3252_10
RS-232_GND_4 P3252_15
ETHERNET_OUT_1A P3252_6 ADSB_ETHERNET_OUT_1A
ETHERNET_OUT_1B P3252_1 ADSB_ETHERNET_OUT_1B
ETHERNET_IN_1A P3252_7 ADSB_ETHERNET_IN_1A
ETHERNET_IN_1B P3252_2 ADSB_ETHERNET_IN_1B
To GPS 175
A ADS-B+ Position Data to Transponder
B Traffic/Weather to GPS 175
GTN/GTS Enable
Page 24-35
ETHERNET_OUT_2A P3252_8
ETHERNET_OUT_2B P3252_3
ETHERNET_IN_2A P3252_9
ETHERNET_IN_2B P3252_4
RS-422_A P3252_11
RS-422_B P3252_12
XPDR_ANT ANT XPDR_ANT
N78HR
Sheet: /Transponder/
File: transponder.kicad_sch
Title: Transponder
Size: USLetter
Date: 2025-11-19
Rev: 1.2.8
KiCad E.D.A. 9.0.7
Id: 8/10

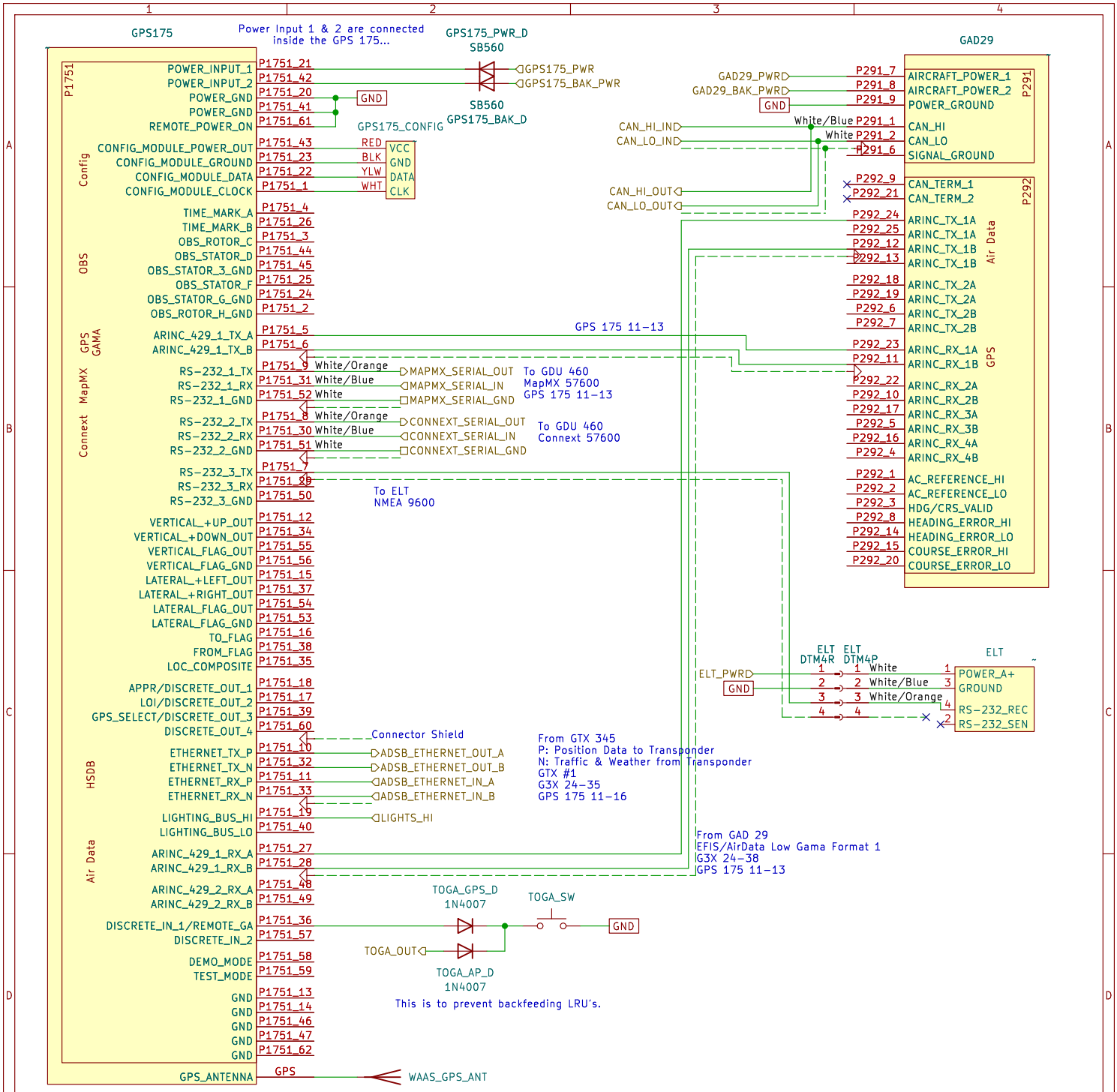

N78HR

Sheet: /Navigator/

File: navigator.kicad_sch

Title:

Size: USLetter	Date: 2025-12-19	**Rev: 1.2.10**
KiCad E.D.A. 9.0.7		Id: 9/10

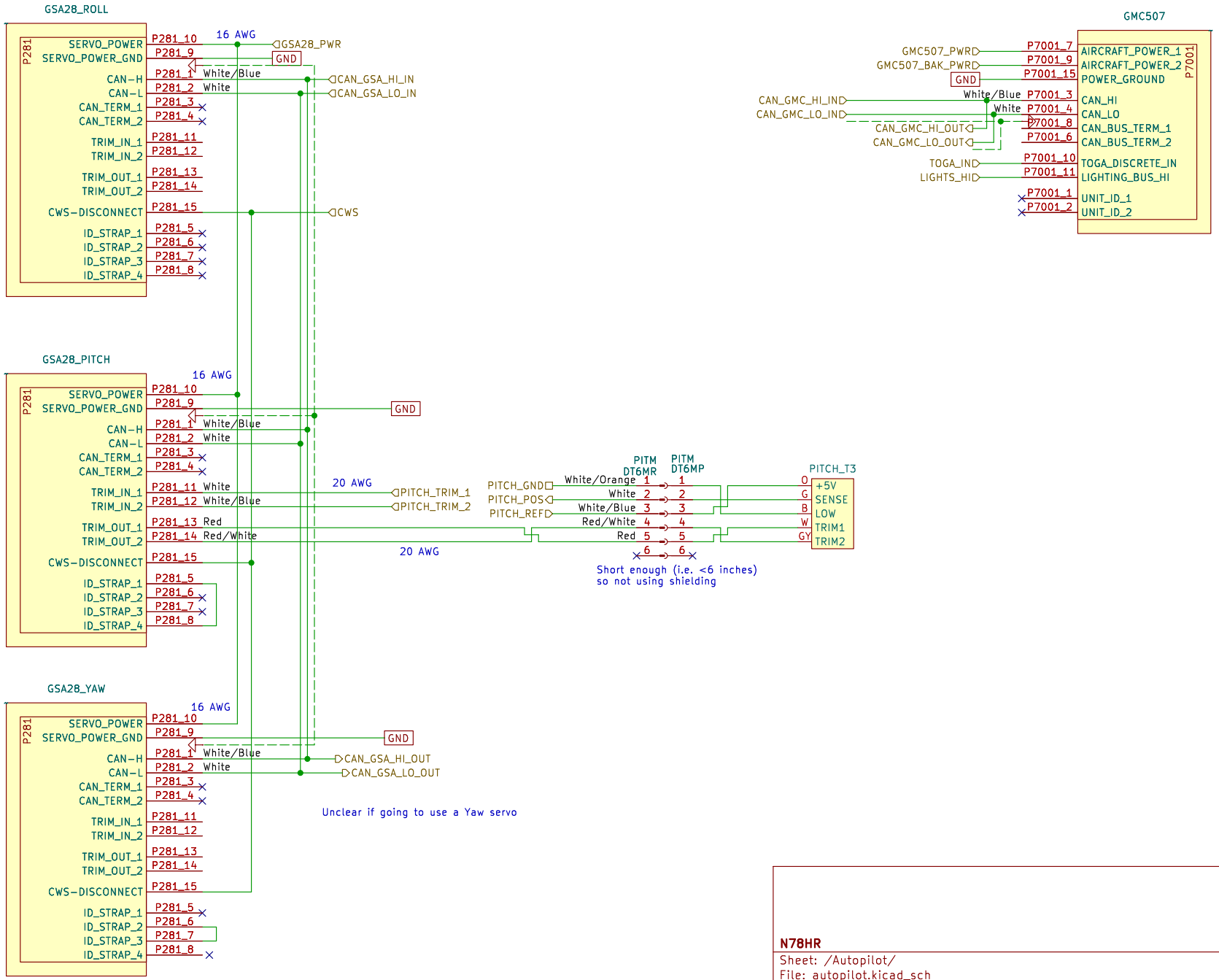

N78HR

Sheet: /Autopilot/

File: autopilot.kicad_sch

Title: Autopilot

Size: USLetter	Date: 2025-11-19	**Rev: 1.2.8**
KiCad E.D.A. 9.0.7		Id: 10/10