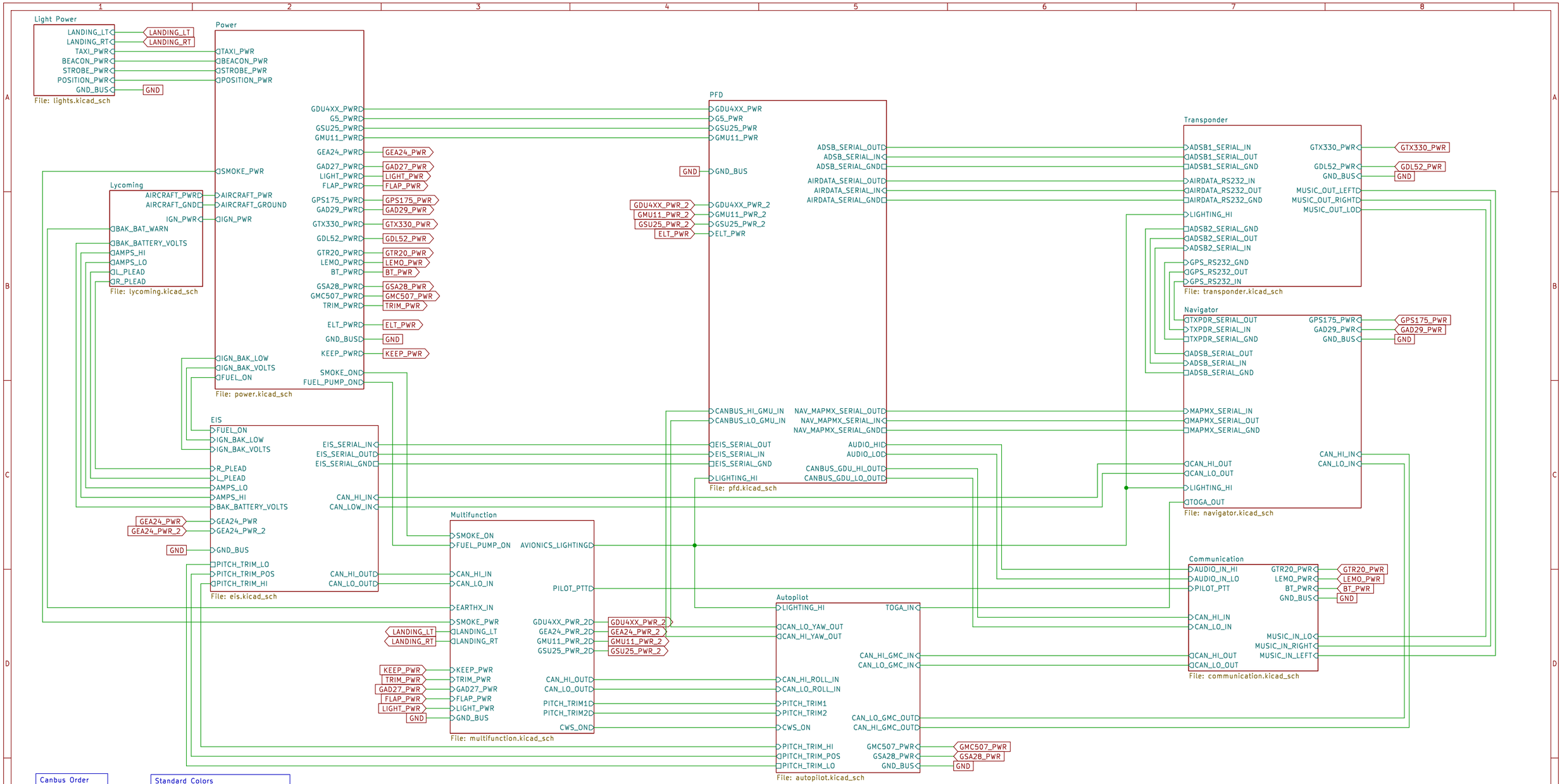

Canbus Order
G5
GSU25
GDU460
GTR20
GMC507
GAD29
GEA24
GAD27
<Connector>
GSA28 Roll
GSA28 Pitch
GSA28 Yaw
GMU11

Standard Colors

Canbus
Hi: White
Lo: White/Blue

Serial
Tx: White
Rx: White/Blue
Gnd: White/Orange

Audio
Left: White
Right: White/Blue
Lo: White/Orange

2 Wire Sensor
Hi: White
Lo: White/Blue

3 Wire Sensor
Signal: White
Lo (Ground): White/Blue
Reference (Power): White/Orange

Overview

File: overview.kicad_sch

N877RV

Sheet: /
File: electrical.kicad_sch

Title: Electrical Overview

Size: B	Date: 2026-02-28	Rev: 1.3
KiCad E.D.A. 9.0.6		Id: 2/12

N877RV System Overview

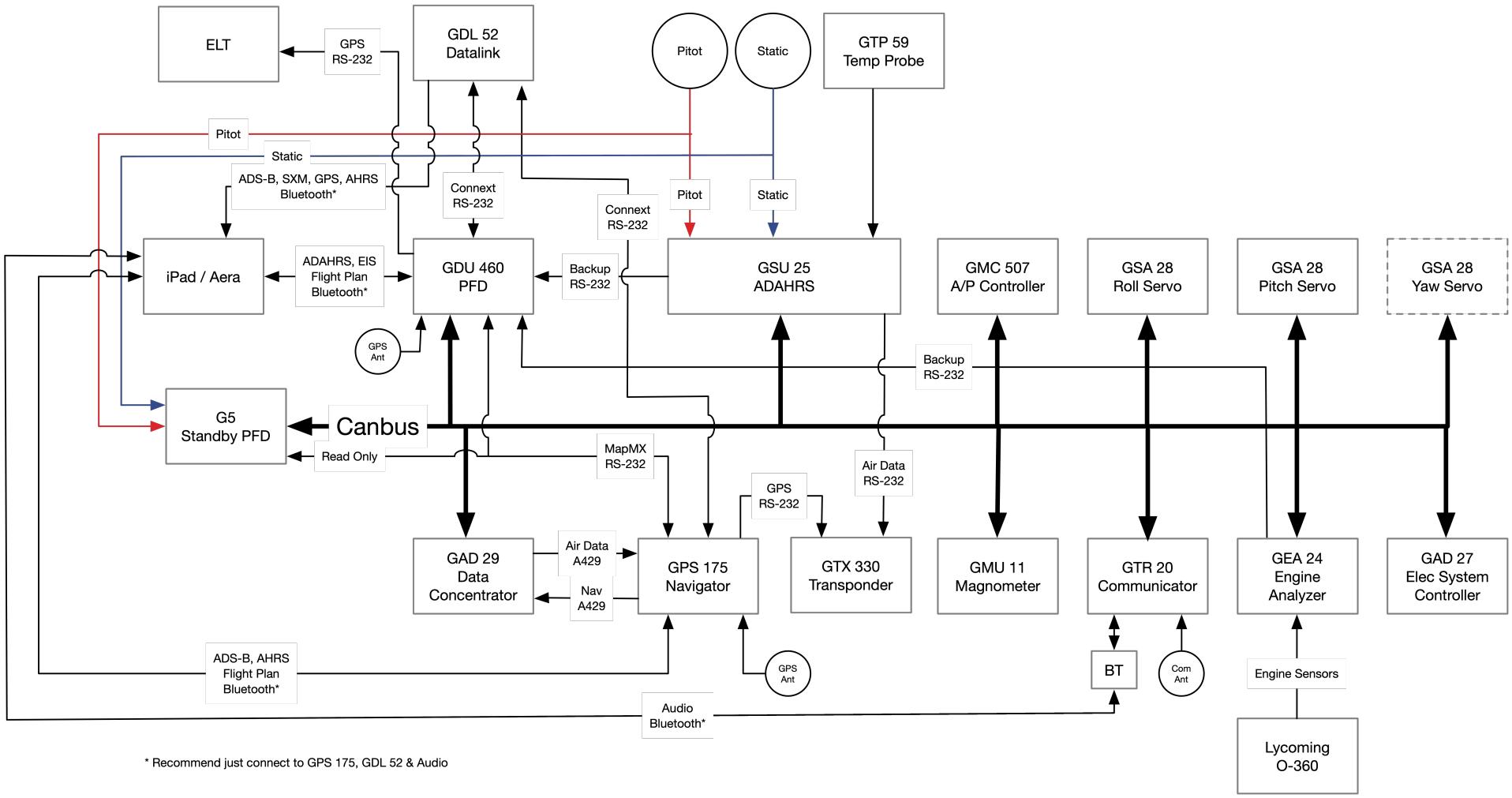

* Recommend just connect to GPS 175, GDL 52 & Audio

N877RV		
Sheet: /Overview/		
File: overview.kicad_sch		
Title: System Overview		
Size: USLetter	Date: 2026-02-28	**Rev: 1.3**
KiCad E.D.A. 9.0.6		Id: 1/12

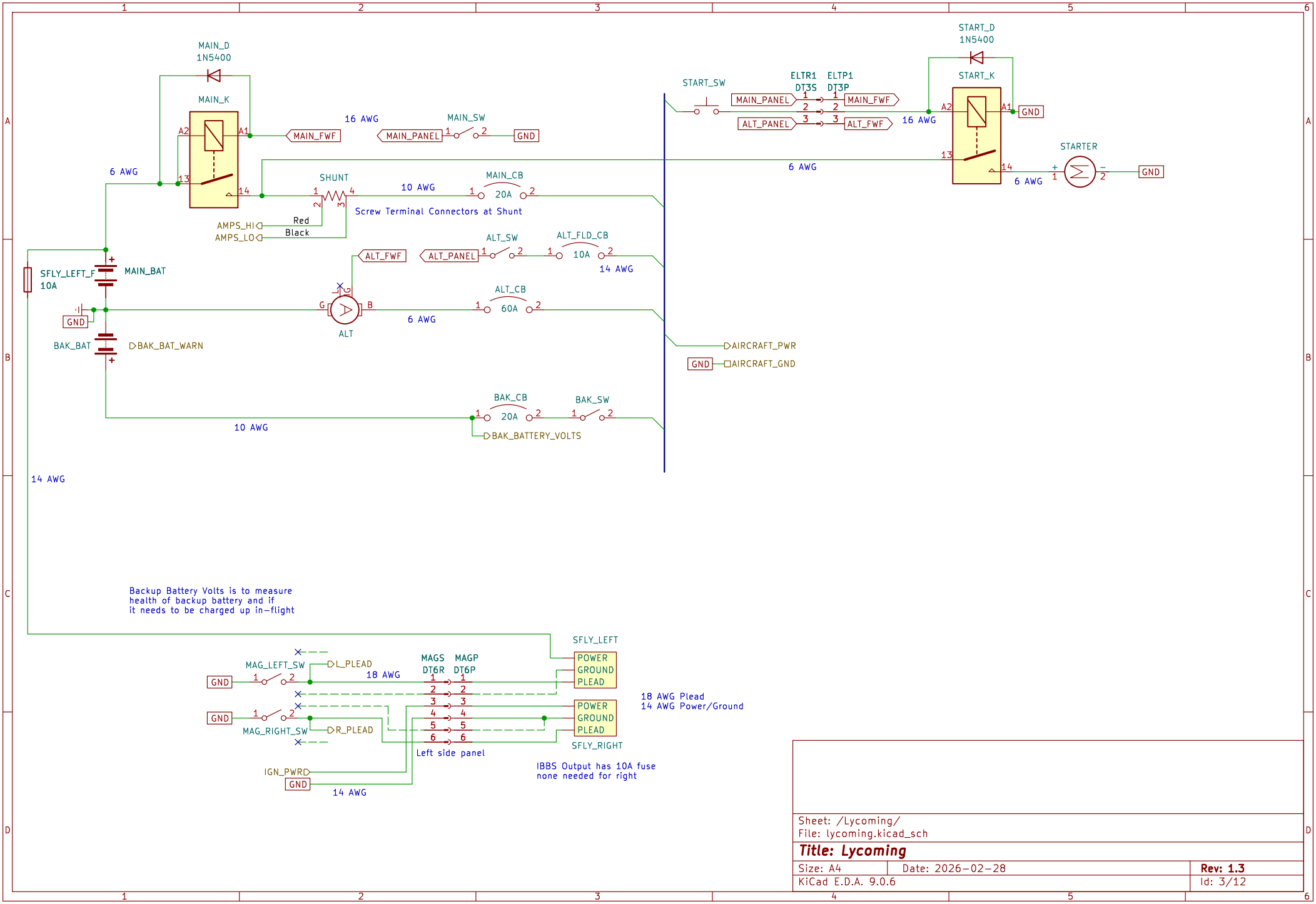

Sheet: /Lycoming/
File: lycoming.kicad_sch

Title: Lycoming

Size: A4	Date: 2026-02-28	**Rev: 1.3**
KiCad E.D.A. 9.0.6		Id: 3/12

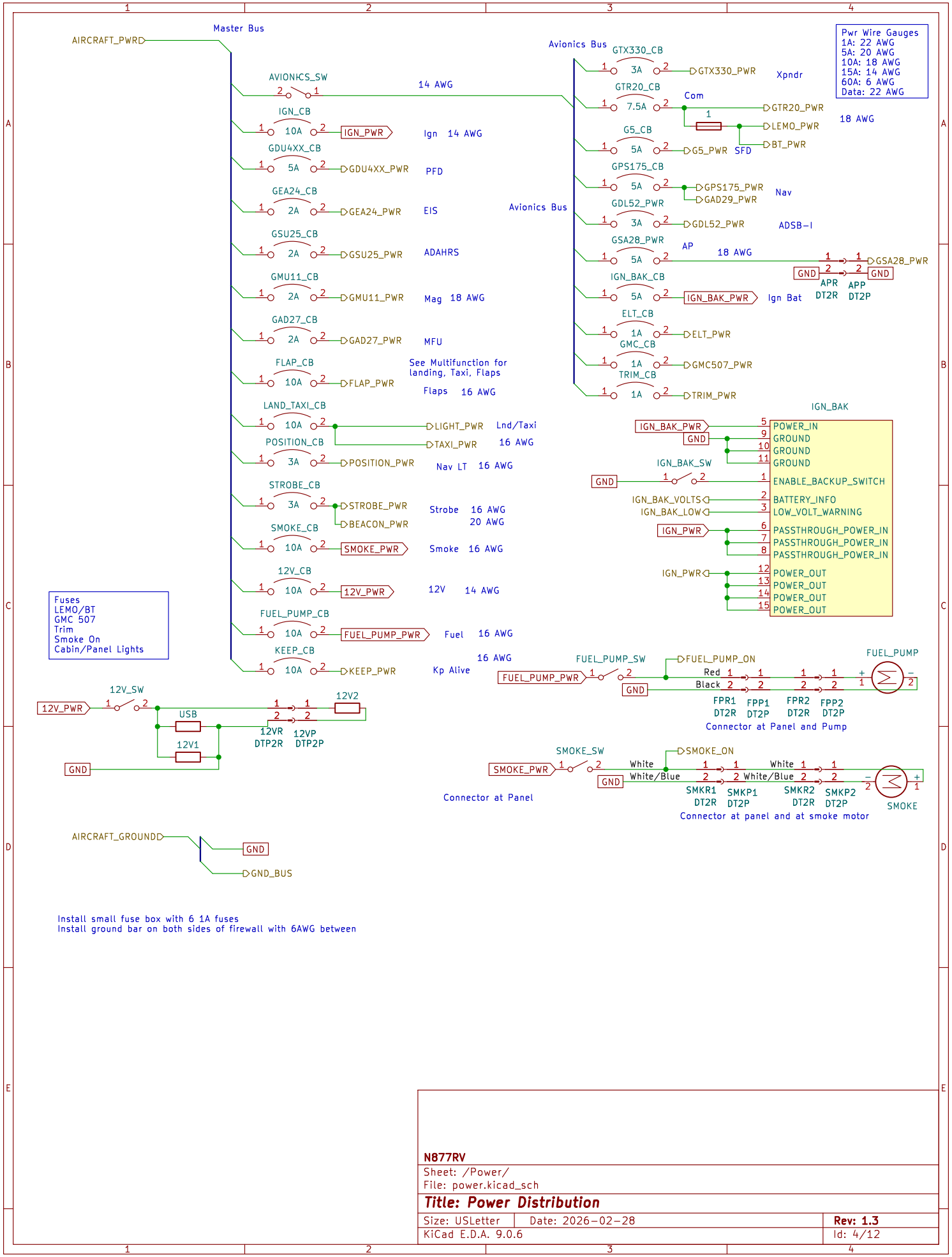

N877RV

Sheet: /Power/

File: power.kicad_sch

Title: Power Distribution

Size: USLetter	Date: 2026-02-28	**Rev: 1.3**
KiCad E.D.A. 9.0.6		Id: 4/12

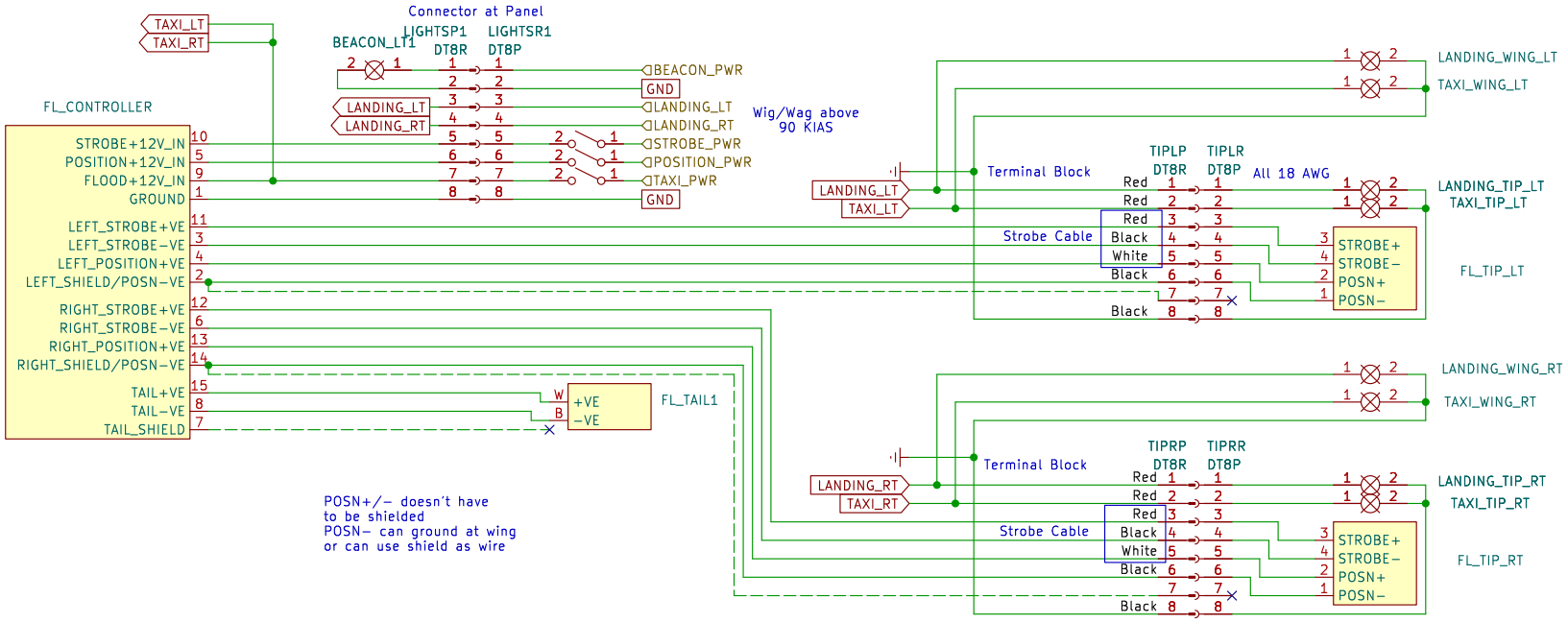

GND_BUS GND

Sheet: /Light Power/
File: wing.kicad_sch

Title:

Size: A4	Date: 2026-02-28	**Rev: 1.3**
KiCad E.D.A. 9.0.6		Id: 5/12

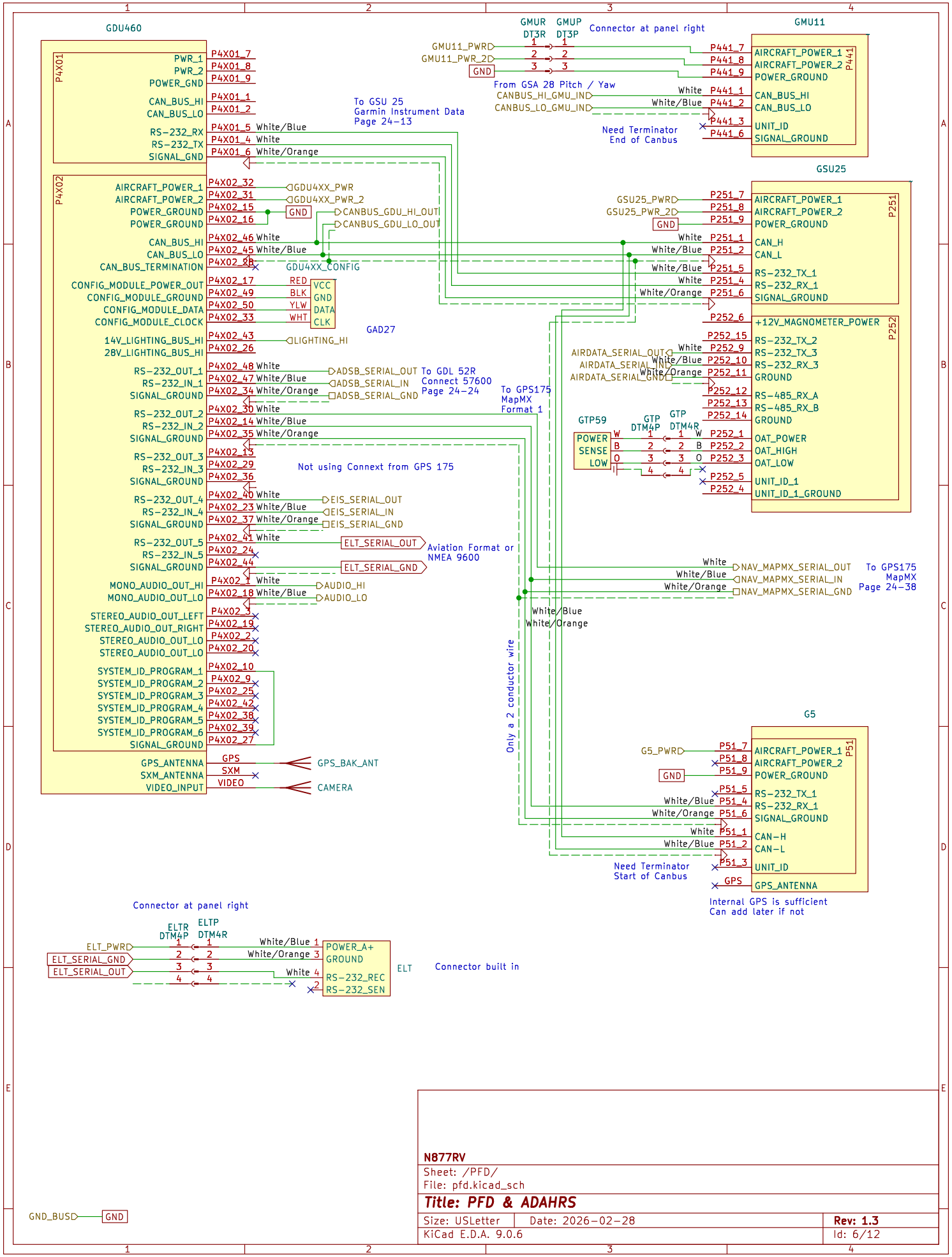
GDU460
P4X01
PWR_1
PWR_2
POWER_GND
CAN_BUS_HI
CAN_BUS_LO
RS-232_RX
RS-232_TX
SIGNAL_GND
P4X02
AIRCRAFT_POWER_1
AIRCRAFT_POWER_2
POWER_GROUND
CAN_BUS_TERMINATION
CONFIG_MODULE_POWER_OUT
CONFIG_MODULE_GROUND
CONFIG_MODULE_DATA
CONFIG_MODULE_CLOCK
14V_LIGHTING_BUS_HI
28V_LIGHTING_BUS_HI
RS-232_OUT_1
RS-232_IN_1
RS-232_OUT_2
RS-232_IN_2
RS-232_OUT_3
RS-232_IN_3
RS-232_OUT_4
RS-232_IN_4
RS-232_OUT_5
RS-232_IN_5
MONO_AUDIO_OUT_HI
MONO_AUDIO_OUT_LO
STEREO_AUDIO_OUT_LEFT
STEREO_AUDIO_OUT_RIGHT
STEREO_AUDIO_OUT_LO
SYSTEM_ID_PROGRAM_1
SYSTEM_ID_PROGRAM_2
SYSTEM_ID_PROGRAM_3
SYSTEM_ID_PROGRAM_4
SYSTEM_ID_PROGRAM_5
SYSTEM_ID_PROGRAM_6
GPS_ANTENNA
SXM_ANTENNA
VIDEO_INPUT
GDU4XX_PWR
GDU4XX_PWR_2
CANBUS_GDU_HI_OUT
CANBUS_GDU_LO_OUT
GDU4XX_CONFIG
VCC
GND
DATA
CLK
GAD27
LIGHTING_HI
ADSB_SERIAL_OUT
ADSB_SERIAL_IN
ADSB_SERIAL_GND
To GDL 52R
Connect 57600
Page 24-24
To GSU 25
Garmin Instrument Data
Page 24-13
To GPS175
MapMX
Format 1
Not using Connext from GPS 175
EIS_SERIAL_OUT
EIS_SERIAL_IN
EIS_SERIAL_GND
ELT_SERIAL_OUT
ELT_SERIAL_GND
Aviation Format or
NMEA 9600
AUDIO_HI
AUDIO_LO
GPS_BAK_ANT
CAMERA
GMU11
GMUR
DT3R
GMUP
DT3P
Connector at panel right
GMU11_PWR
GMU11_PWR_2
GND
From GSA 28 Pitch / Yaw
CANBUS_HI_GMU_IND
CANBUS_LO_GMU_IND
Need Terminator
End of Canbus
AIRCRAFT_POWER_1
AIRCRAFT_POWER_2
POWER_GROUND
CAN_BUS_HI
CAN_BUS_LO
UNIT_ID
SIGNAL_GROUND
GSU25
GSU25_PWR
GSU25_PWR_2
CAN_H
CAN_L
RS-232_TX_1
RS-232_RX_1
+12V_MAGNOMETER_POWER
RS-232_TX_2
RS-232_TX_3
RS-232_RX_3
GROUND
RS-485_RX_A
RS-485_RX_B
AIRDATA_SERIAL_OUT
AIRDATA_SERIAL_IN
AIRDATA_SERIAL_GND
GTP59
POWER
SENSE
LOW
GTP
DTM4P
GTP
DTM4R
OAT_POWER
OAT_HIGH
OAT_LOW
UNIT_ID_1
UNIT_ID_1_GROUND
NAV_MAPMX_SERIAL_OUT
NAV_MAPMX_SERIAL_IN
NAV_MAPMX_SERIAL_GND
To GPS175
MapMX
Page 24-38
Only a 2 conductor wire
G5
G5_PWR
RS-232_TX_1
RS-232_RX_1
SIGNAL_GROUND
CAN-H
CAN-L
Need Terminator
Start of Canbus
GPS_ANTENNA
Internal GPS is sufficient
Can add later if not
Connector at panel right
ELTR
DTM4P
ELTP
DTM4R
ELT_PWR
ELT_SERIAL_GND
ELT_SERIAL_OUT
POWER_A+
GROUND
RS-232_REC
RS-232_SEN
ELT
Connector built in
GND_BUS
GND
N877RV
Sheet: /PFD/
File: pfd.kicad_sch
Title: PFD & ADAHRS
Size: USLetter
Date: 2026-02-28
Rev: 1.3
KiCad E.D.A. 9.0.6
Id: 6/12

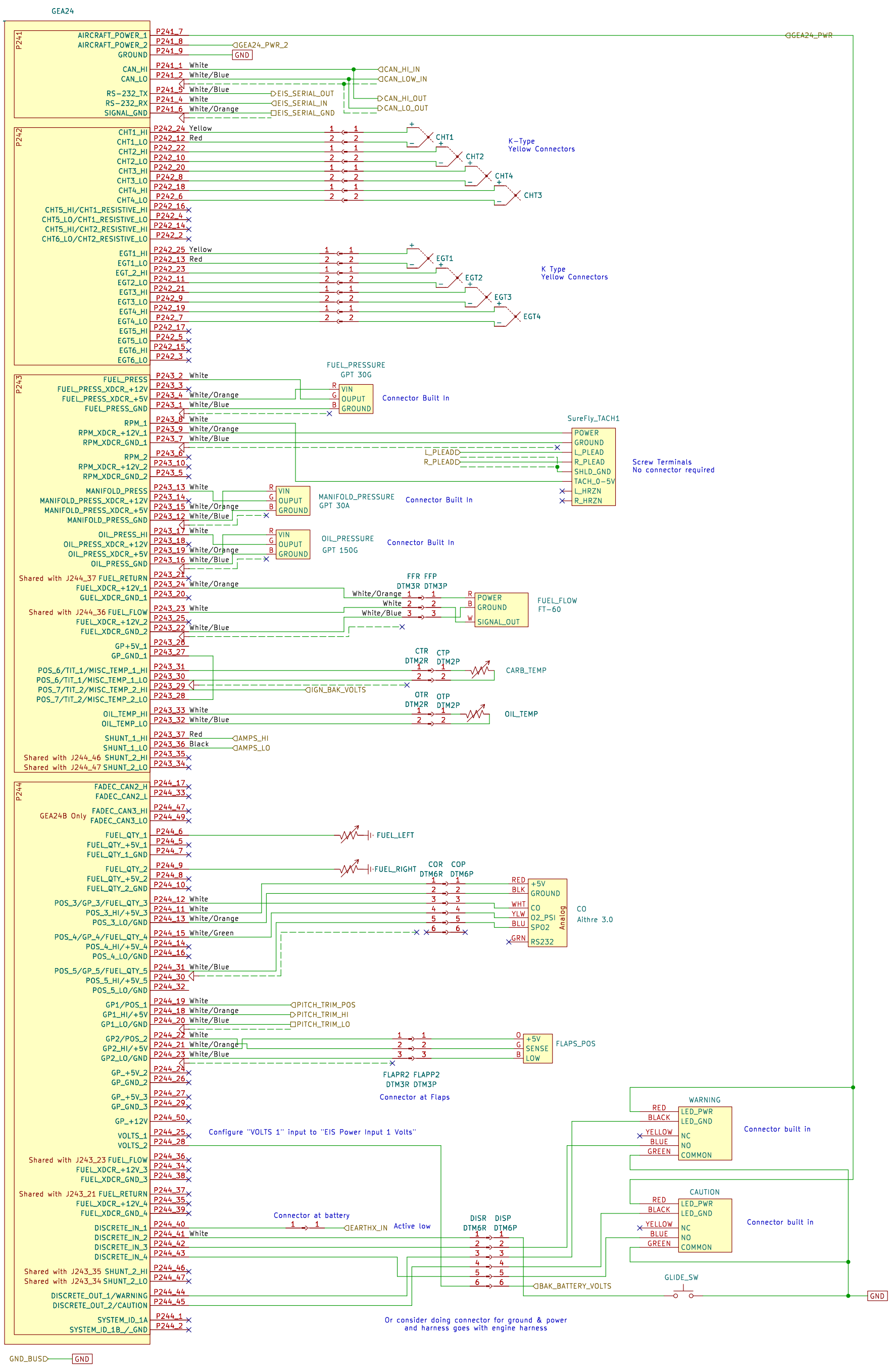

N877RV

Sheet: /EIS/

File: eis.kicad_sch

Title: EIS

Size: USLedger	Date: 2026-02-28	**Rev: 1.3**
KiCad E.D.A. 9.0.6		Id: 7/12

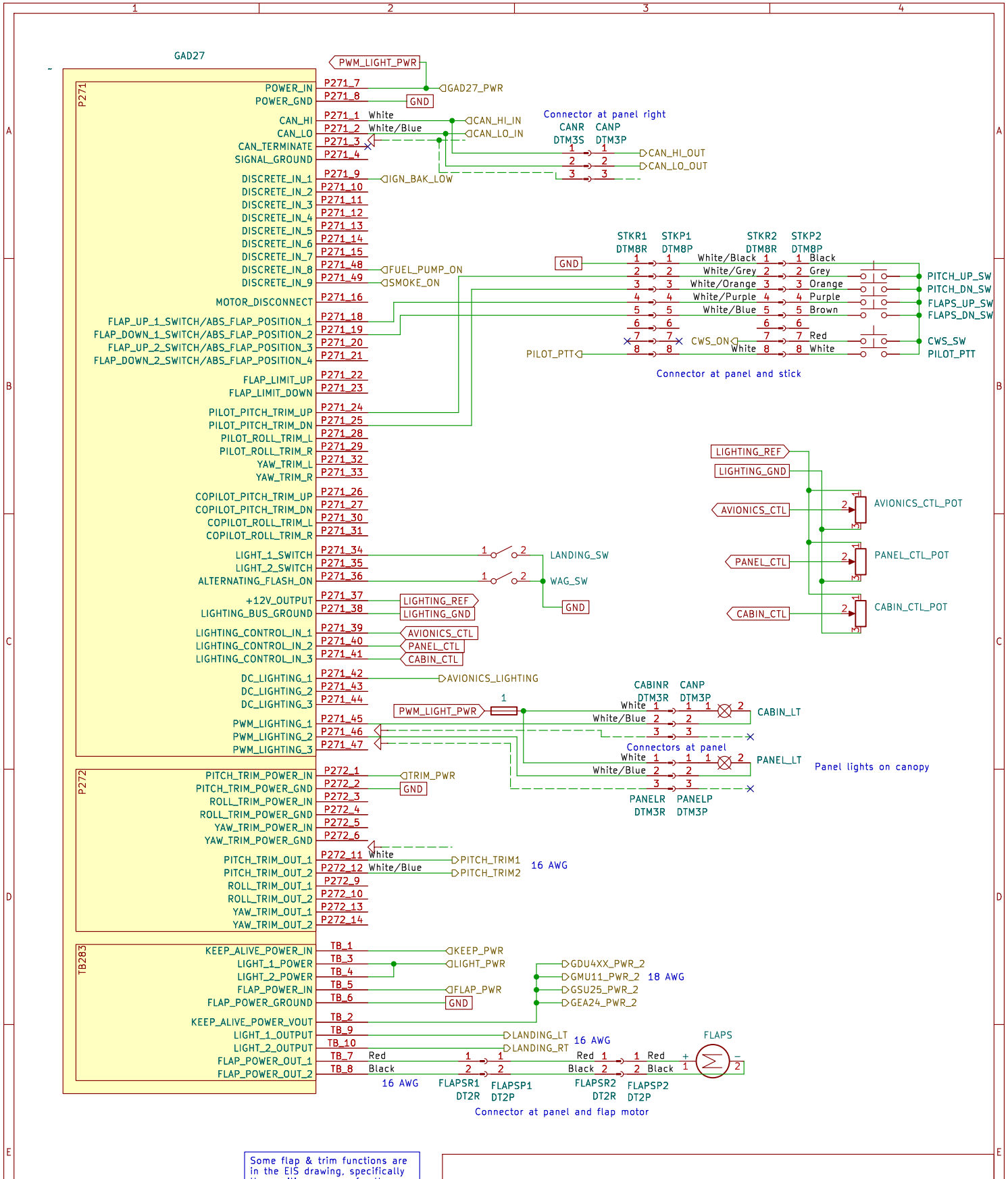

N877RV

Sheet: /Multifunction/

File: multifunction.kicad_sch

Title: Flaps, Lights & Trim

Size: USLetter	Date: 2026-02-28	Rev: 1.3
KiCad E.D.A. 9.0.6		Id: 8/12

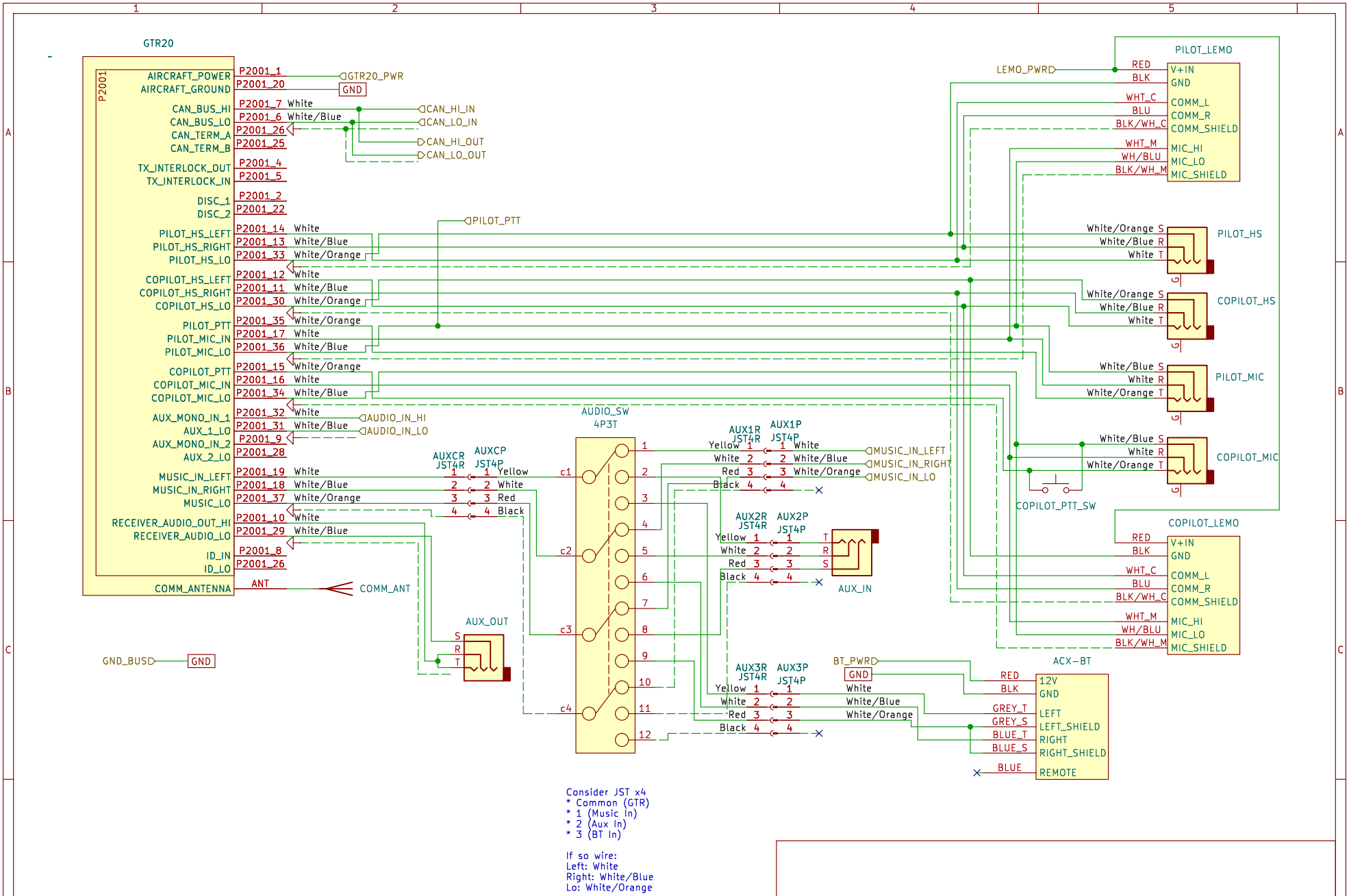

Consider JST x4
* Common (GTR)
* 1 (Music In)
* 2 (Aux In)
* 3 (BT In)

If so wire:
Left: White
Right: White/Blue
Lo: White/Orange

N877RV

Sheet: /Communication/
File: communication.kicad_sch

Title: Communication

Size: USLetter	Date: 2026-02-28	**Rev: 1.3**
KiCad E.D.A. 9.0.6		Id: 9/12

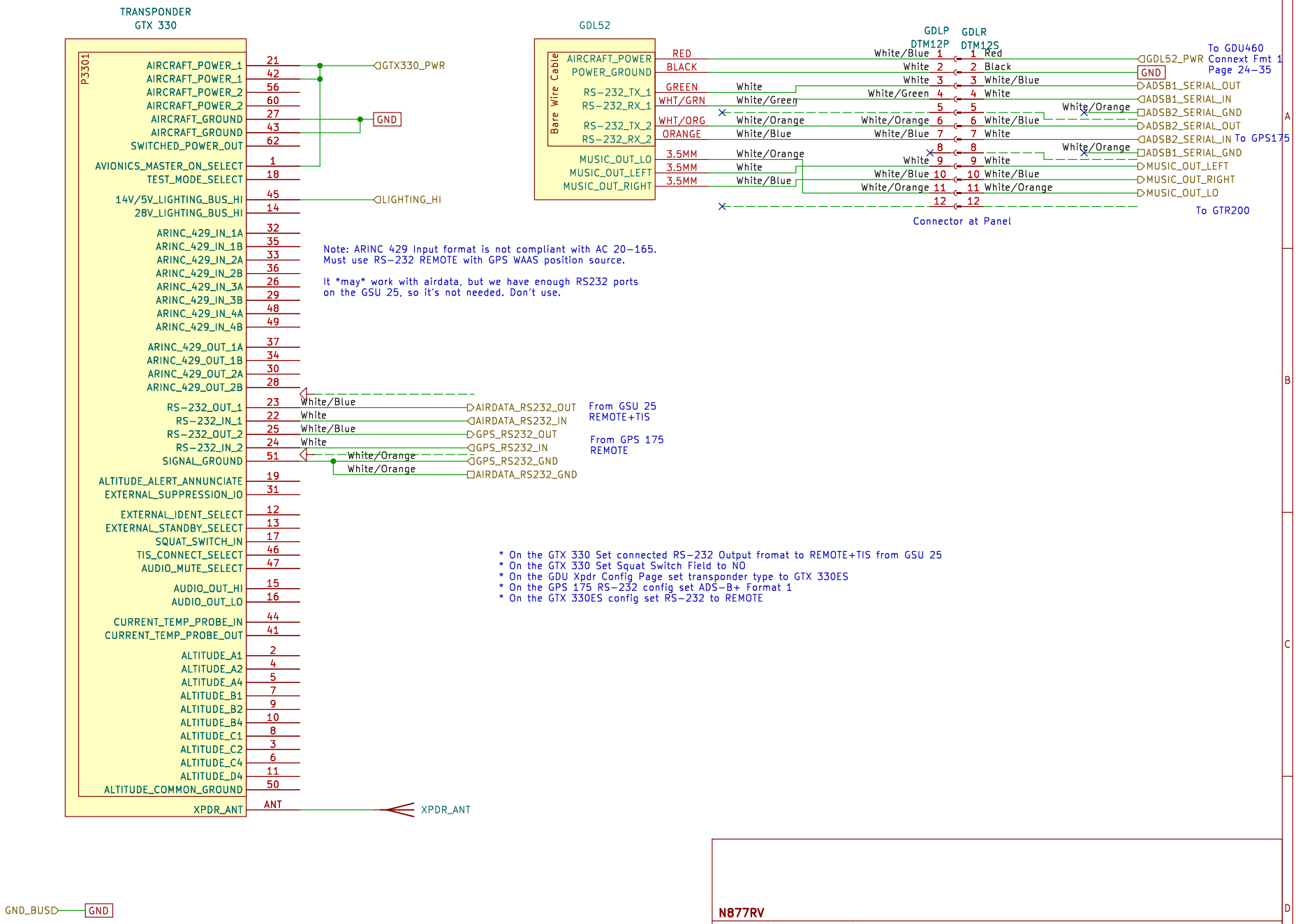

N877RV

Sheet: /Transponder/
File: transponder.kicad_sch

Title: Transponder

Size: USLetter	Date: 2026-02-28	**Rev: 1.3**
KiCad E.D.A. 9.0.6		Id: 10/12

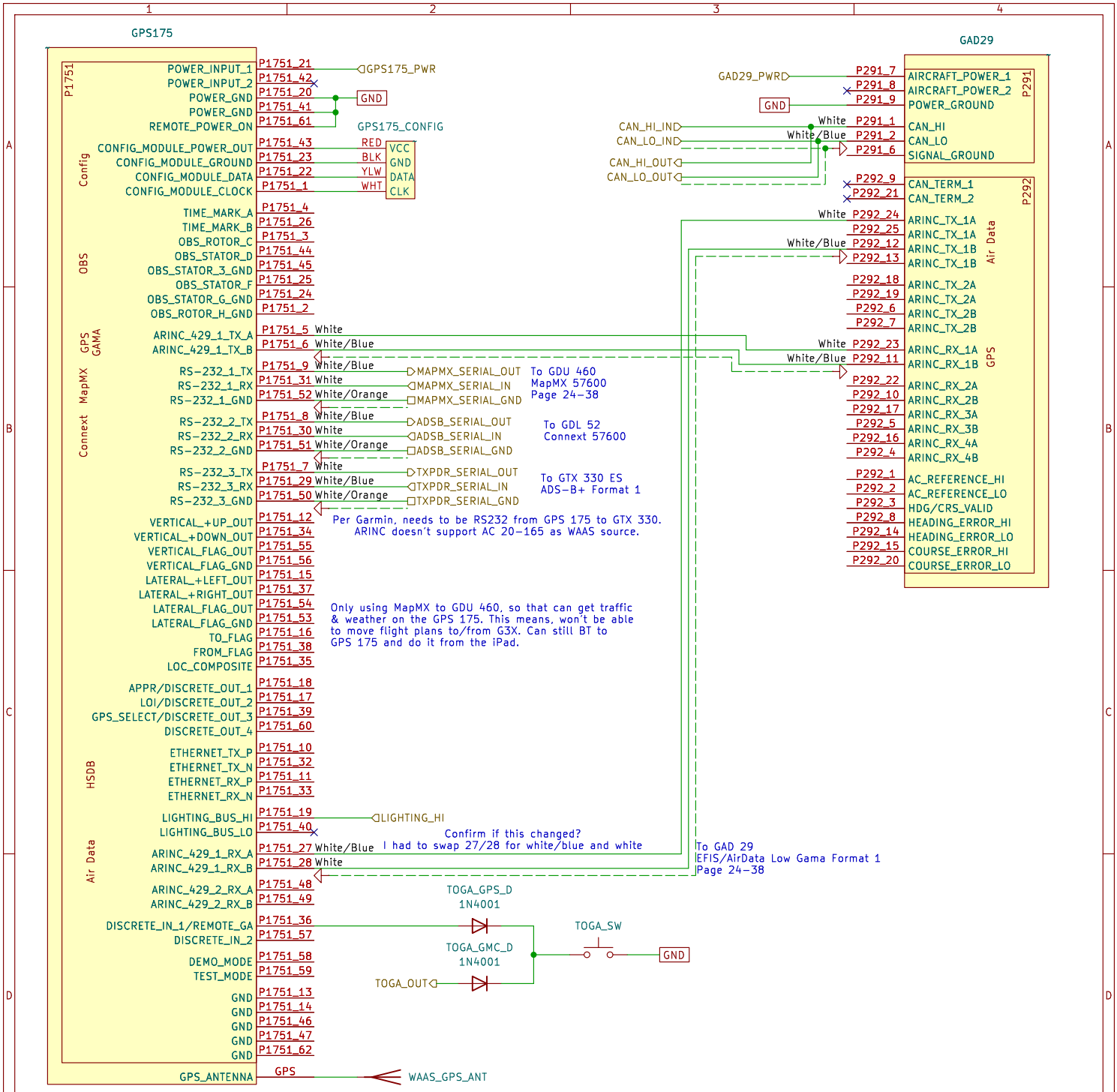

N877RV

Sheet: /Navigator/
File: navigator.kicad_sch

Title:

Size: A	Date: 2026-02-28	**Rev: 1.3**
KiCad E.D.A. 9.0.6		Id: 11/12

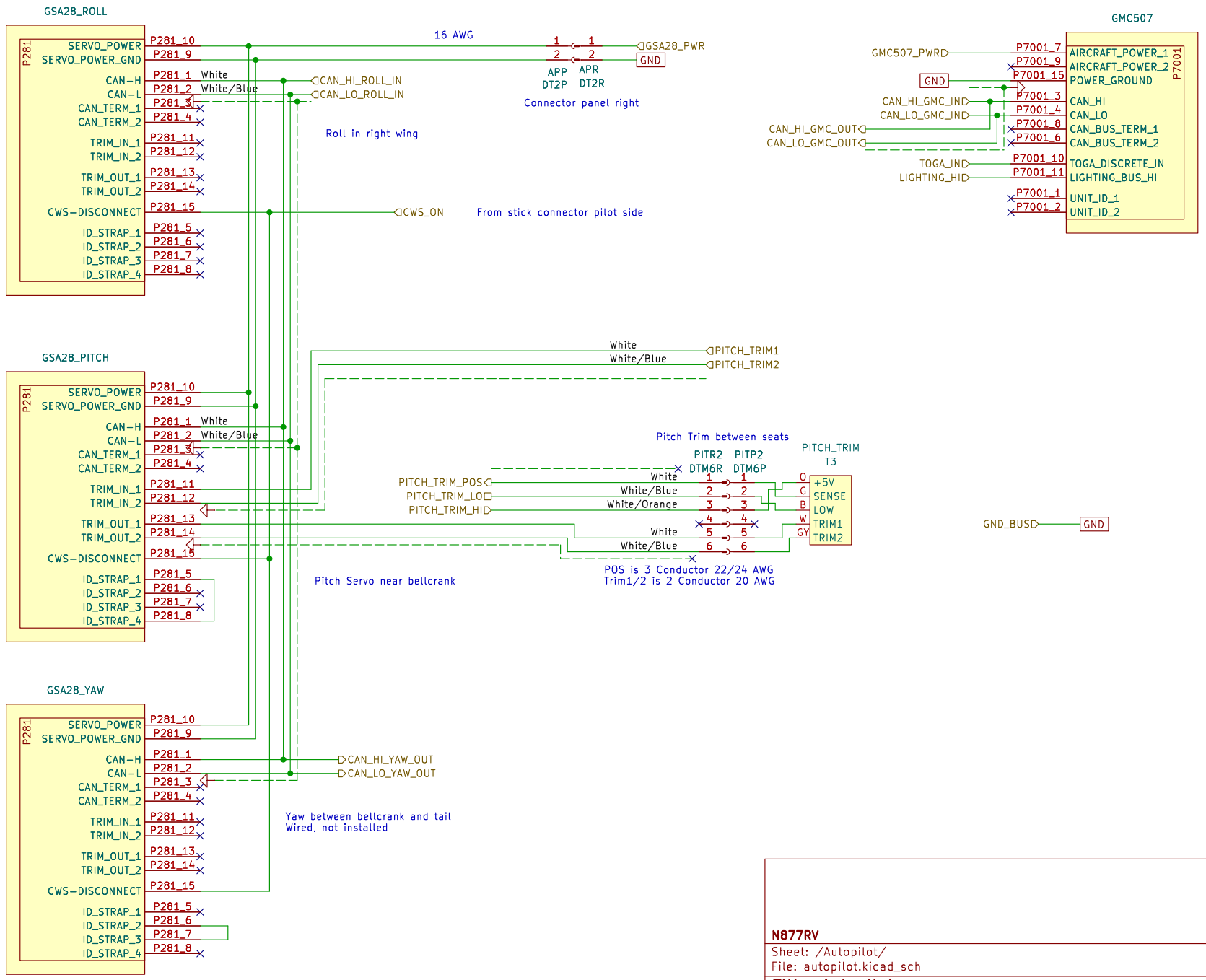

N877RV

Sheet: /Autopilot/

File: autopilot.kicad_sch

Title: Autopilot

Size: USLetter	Date: 2026-02-28	**Rev: 1.3**
KiCad E.D.A. 9.0.6		Id: 12/12