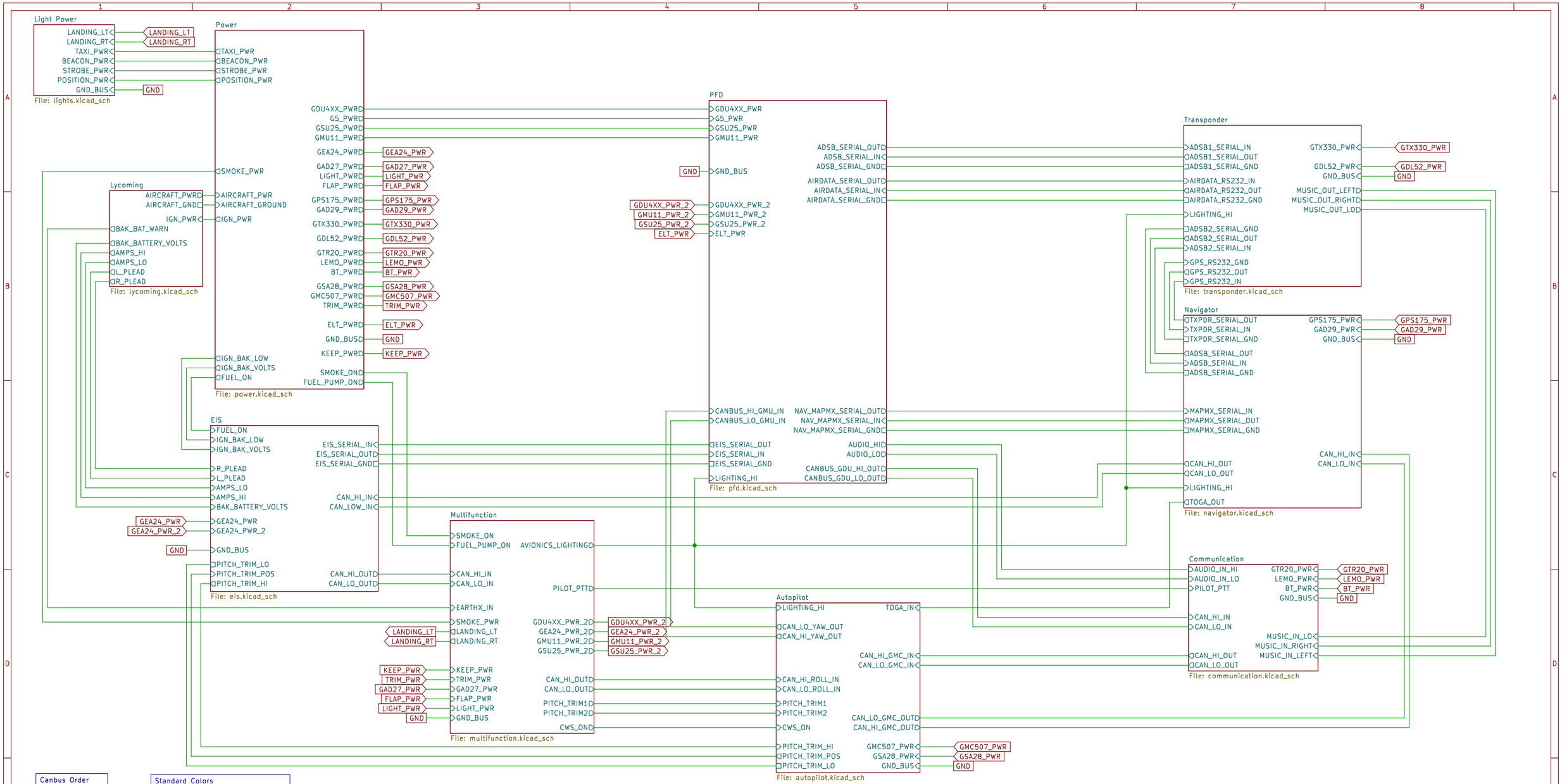

Canbus Order
G5
GSU25
GDU460
GTR20
GMC507
GAD29
GEA24
GAD27
<Connector>
GSA28 Roll
GSA28 Pitch
GSA28 Yaw
GMU11

Standard Colors

Canbus
Hi: White
Lo: White/Blue

Serial
Tx: White
Rx: White/Blue
Gnd: White/Orange

Audio
Left: White
Right: White/Blue
Lo: White/Orange

2 Wire Sensor
Hi: White
Lo: White/Blue

3 Wire Sensor
Signal: White
Lo (Ground): White/Blue
Reference (Power): White/Orange

Overview

File: overview.kicad_sch

N877RV

Sheet: /
File: electrical.kicad_sch

Title: Electrical Overview

Size: B	Date: 2026-02-28	Rev: 1.3
KiCad E.D.A. 9.0.6		Id: 2/12

N877RV System Overview

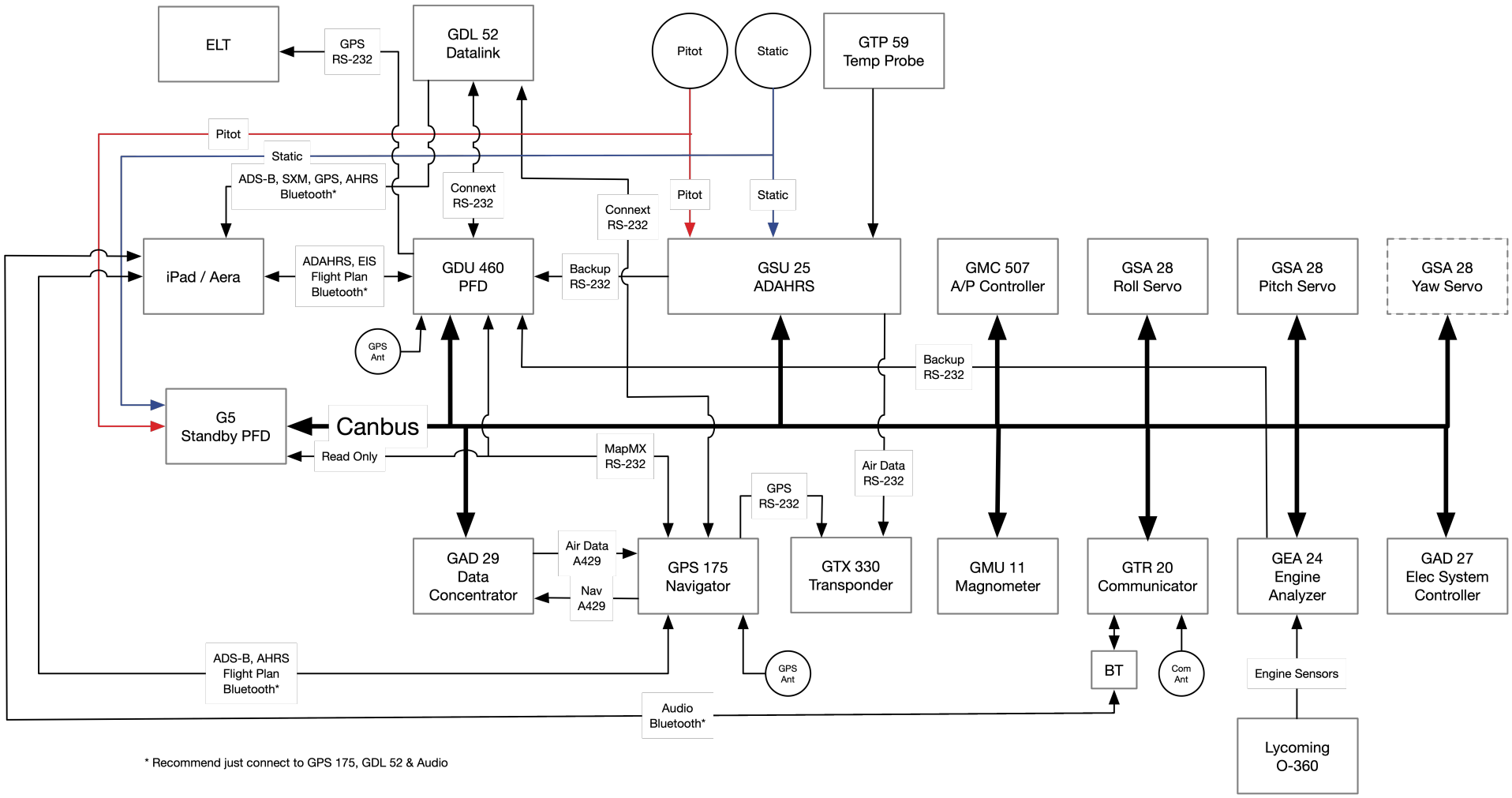

* Recommend just connect to GPS 175, GDL 52 & Audio

N877RV		
Sheet: /Overview/		
File: overview.kicad_sch		
Title: System Overview		
Size: USLetter	Date: 2026-02-28	**Rev: 1.3**
KiCad E.D.A. 9.0.6		Id: 1/12

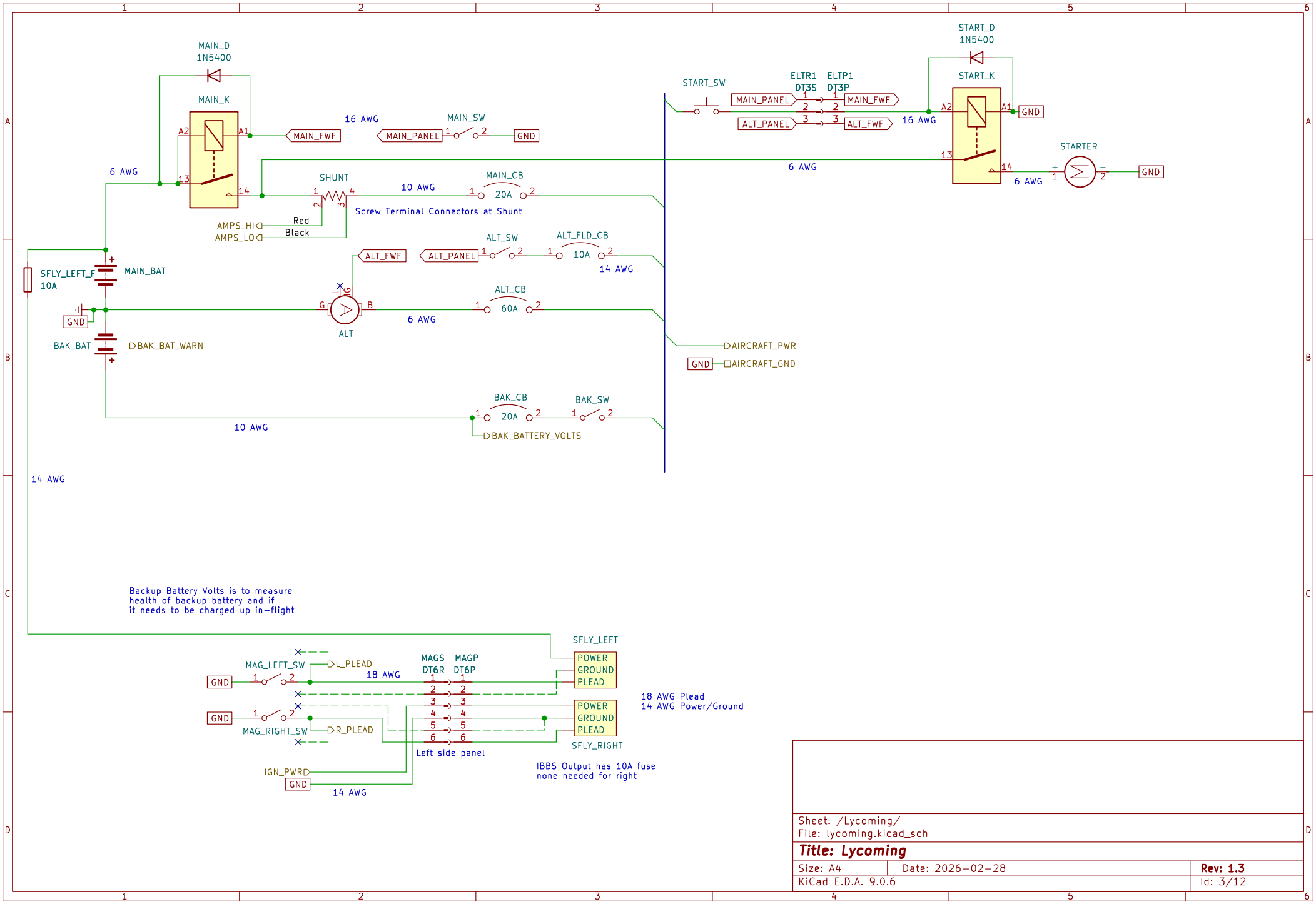

Sheet: /Lycoming/
File: lycoming.kicad_sch

Title: Lycoming

Size: A4	Date: 2026-02-28	**Rev: 1.3**
KiCad E.D.A. 9.0.6		Id: 3/12

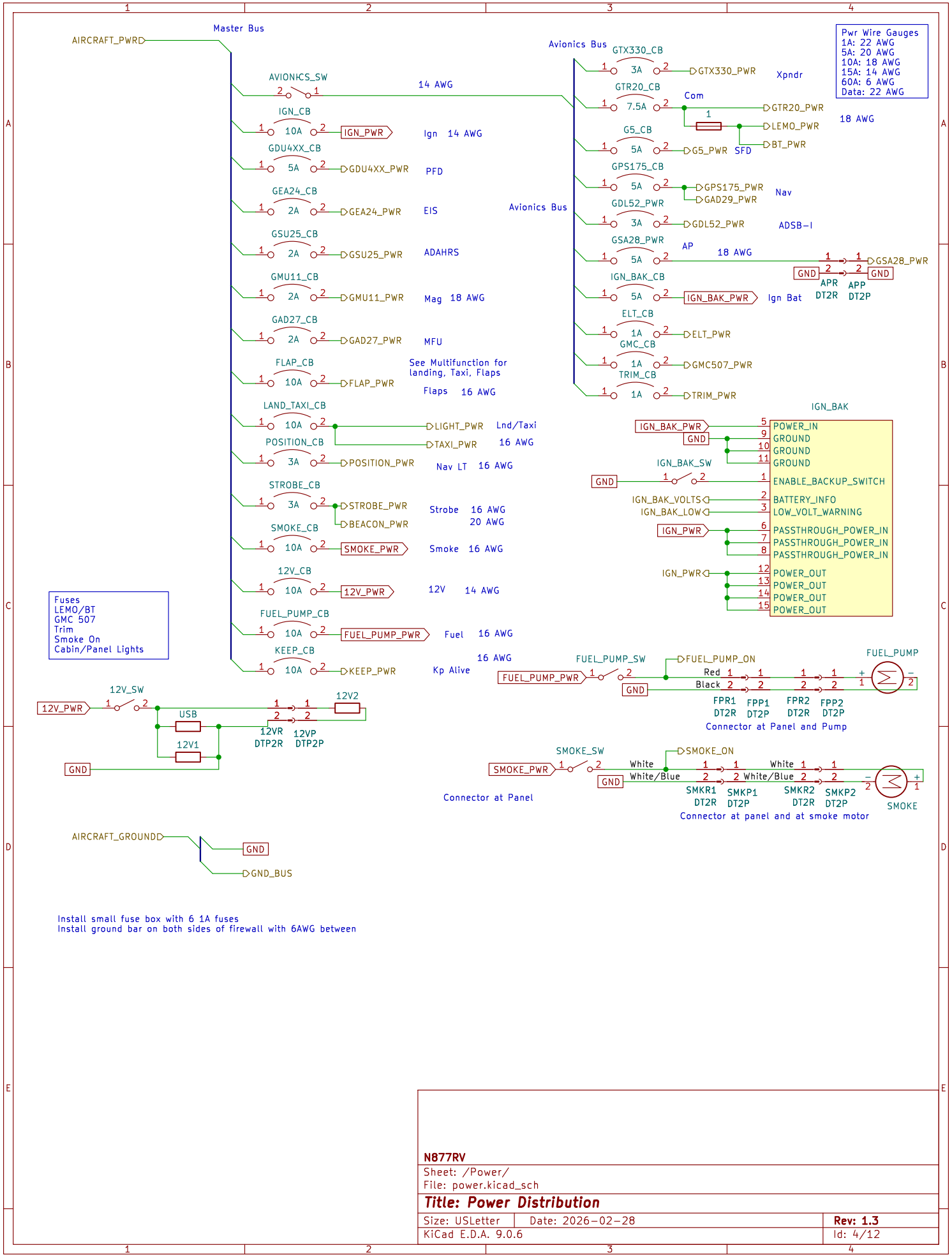

N877RV

Sheet: /Power/

File: power.kicad_sch

Title: Power Distribution

Size: USLetter	Date: 2026-02-28	**Rev: 1.3**
KiCad E.D.A. 9.0.6		Id: 4/12

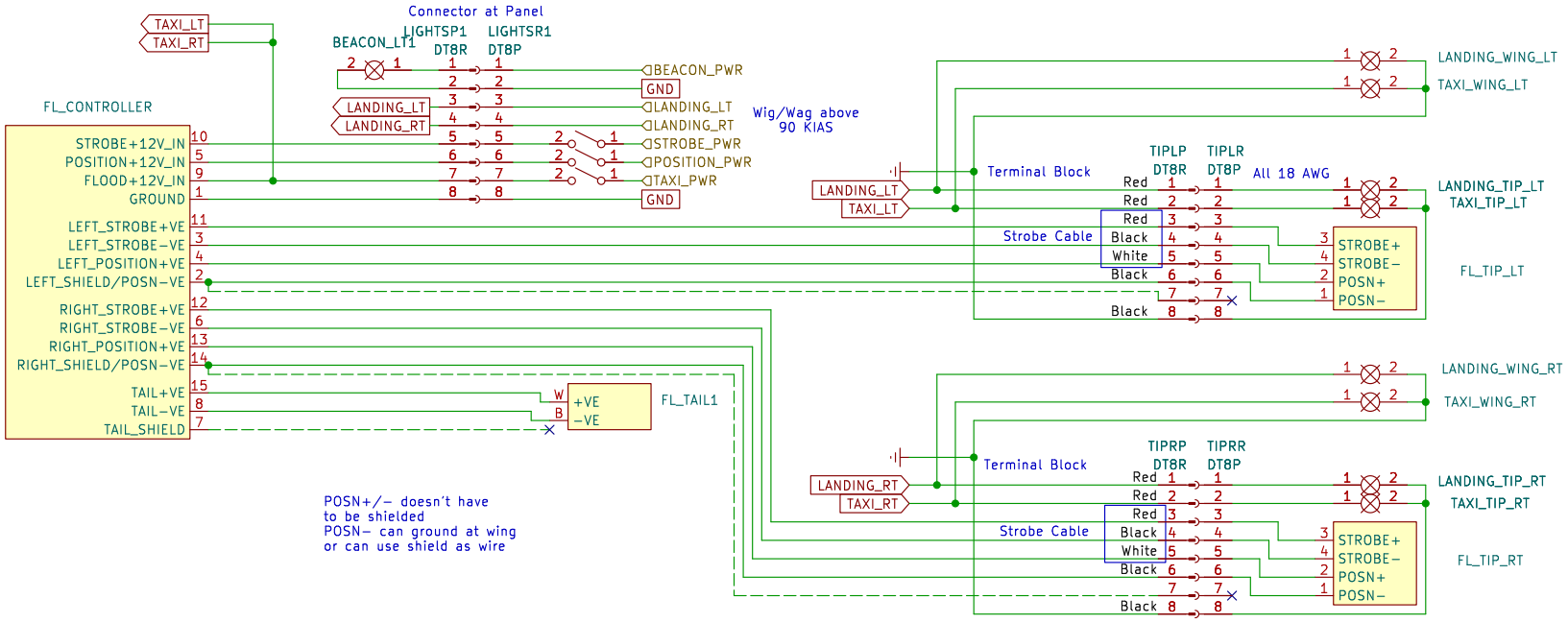

GND_BUS GND

Sheet: /Light Power/
File: wing.kicad_sch

Title:

Size: A4	Date: 2026-02-28	**Rev: 1.3**
KiCad E.D.A. 9.0.6		Id: 5/12

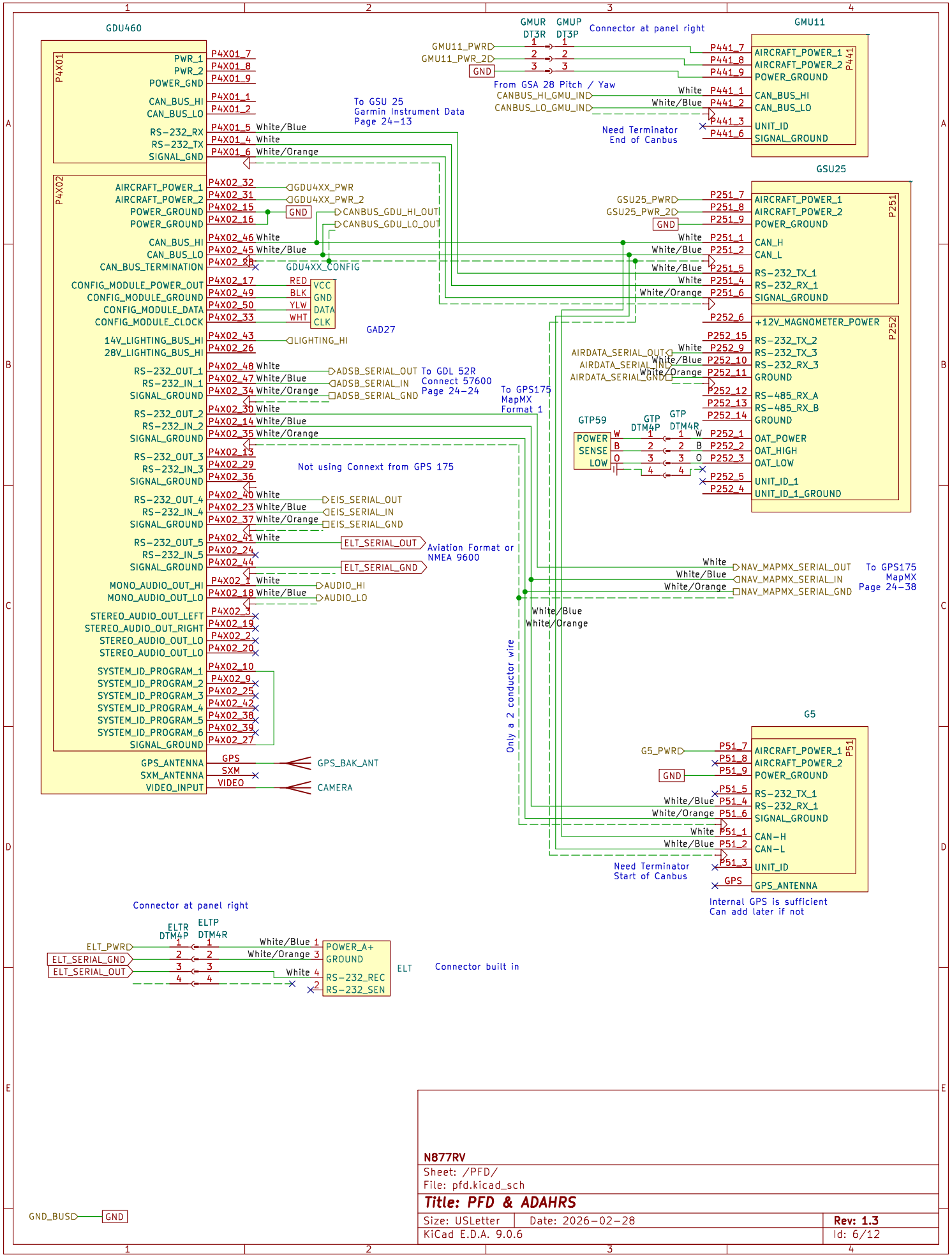

N877RV

Sheet: /PFD/

File: pfd.kicad_sch

Title: PFD & ADAHRS

Size: USLetter	Date: 2026-02-28	Rev: 1.3
KiCad E.D.A. 9.0.6		Id: 6/12

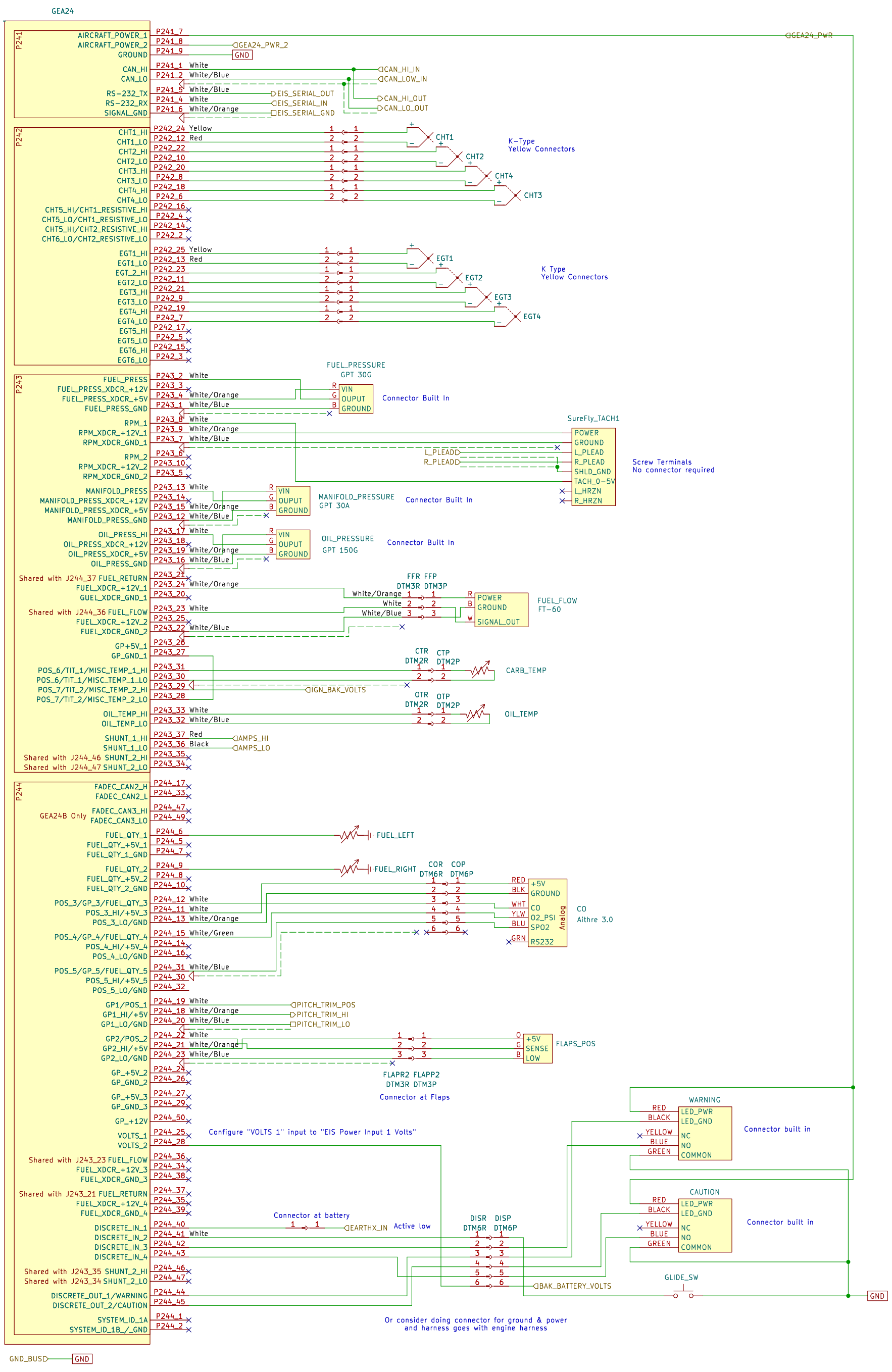

N877RV

Sheet: /EIS/

File: eis.kicad_sch

Title: EIS

Size: USLedger	Date: 2026-02-28	Rev: 1.3
KiCad E.D.A. 9.0.6		Id: 7/12

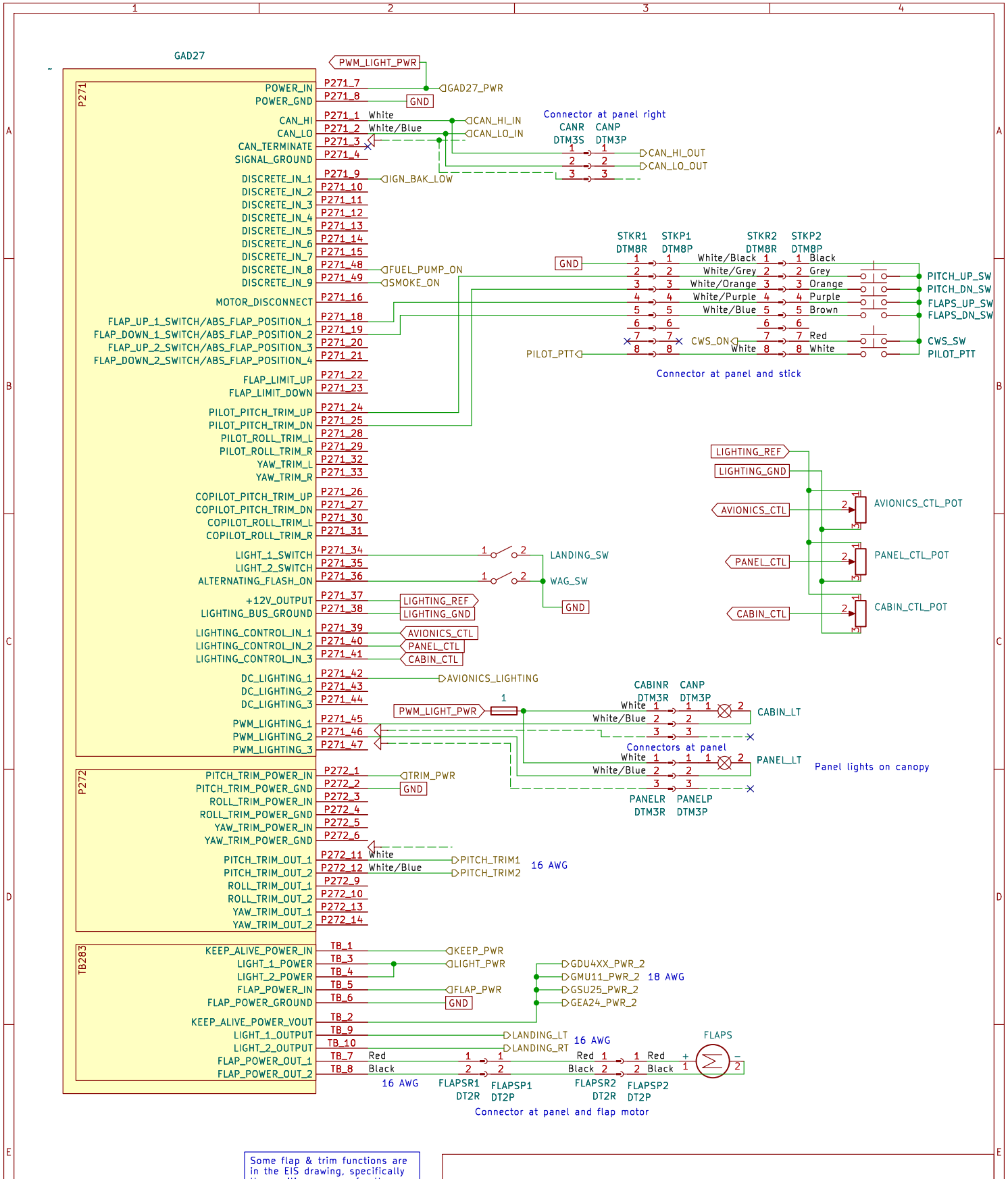

N877RV

Sheet: /Multifunction/

File: multifunction.kicad_sch

Title: Flaps, Lights & Trim

Size: USLetter	Date: 2026-02-28	Rev: 1.3
KiCad E.D.A. 9.0.6		Id: 8/12

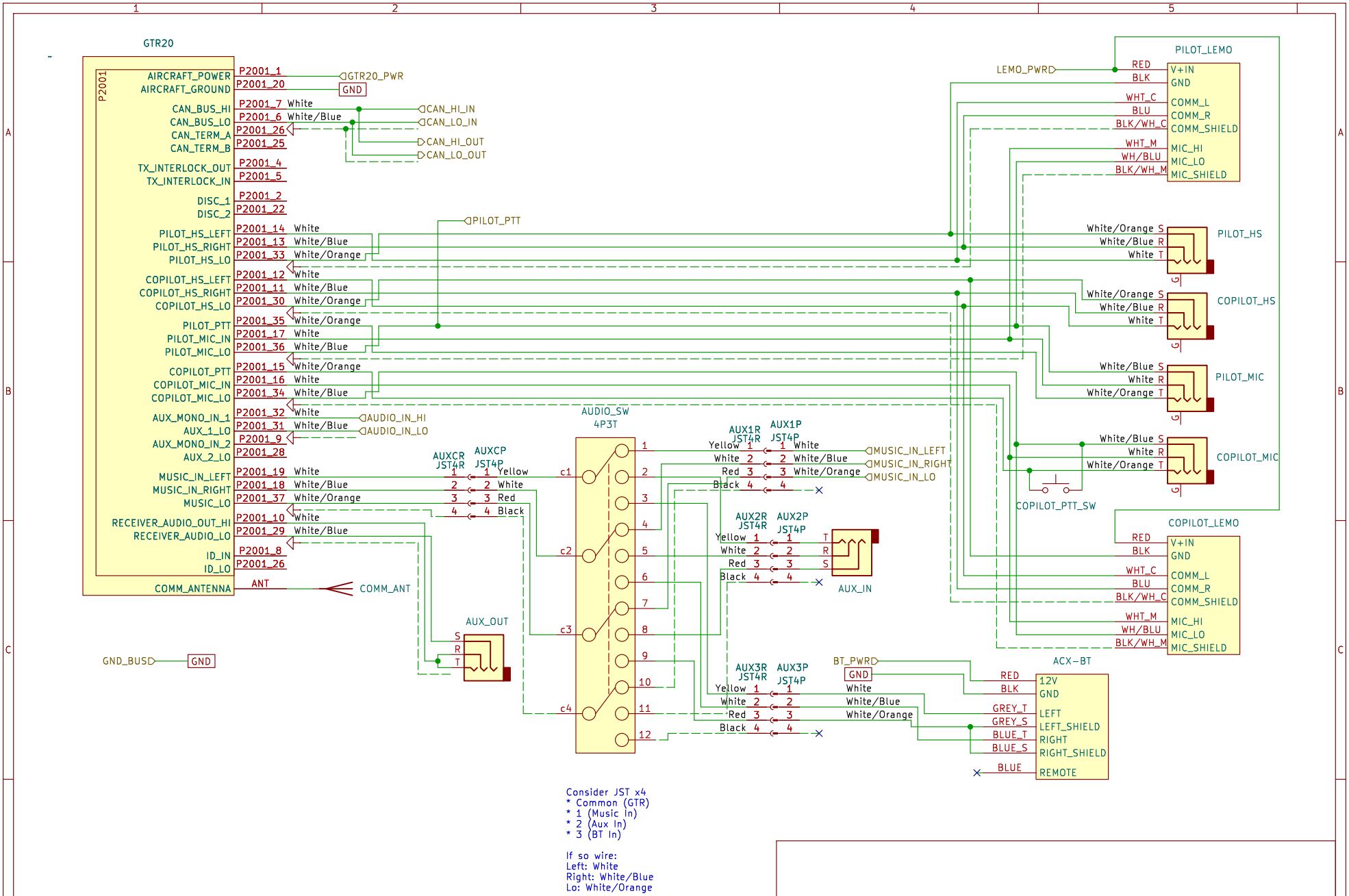

Consider JST x4
* Common (GTR)
* 1 (Music In)
* 2 (Aux In)
* 3 (BT In)

If so wire:
Left: White
Right: White/Blue
Lo: White/Orange

N877RV

Sheet: /Communication/
File: communication.kicad_sch

Title: Communication

Size: USLetter	Date: 2026-02-28	**Rev: 1.3**
KiCad E.D.A. 9.0.6		Id: 9/12

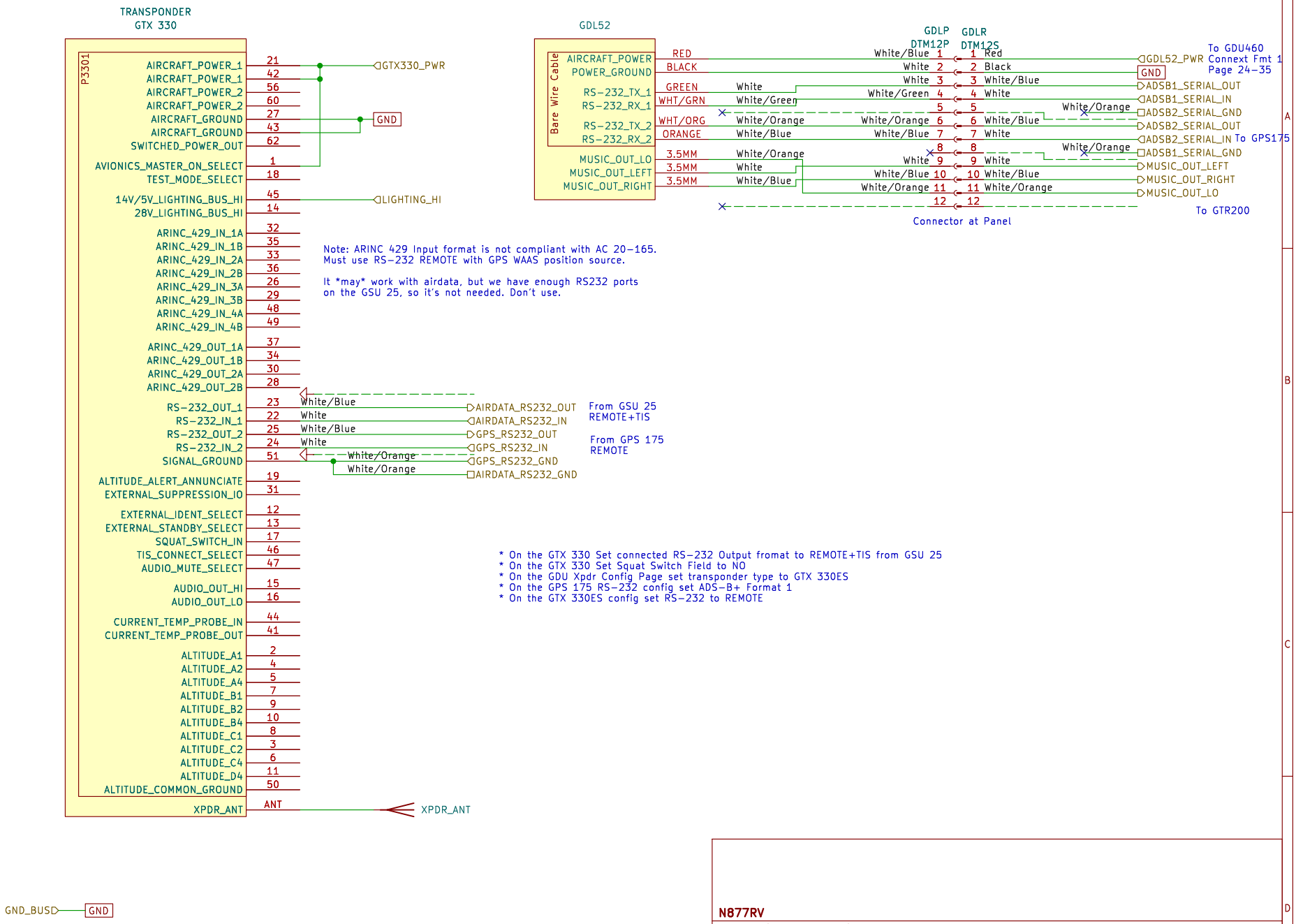

N877RV

Sheet: /Transponder/
File: transponder.kicad_sch

Title: Transponder

Size: USLetter	Date: 2026-02-28	**Rev: 1.3**
KiCad E.D.A. 9.0.6		Id: 10/12

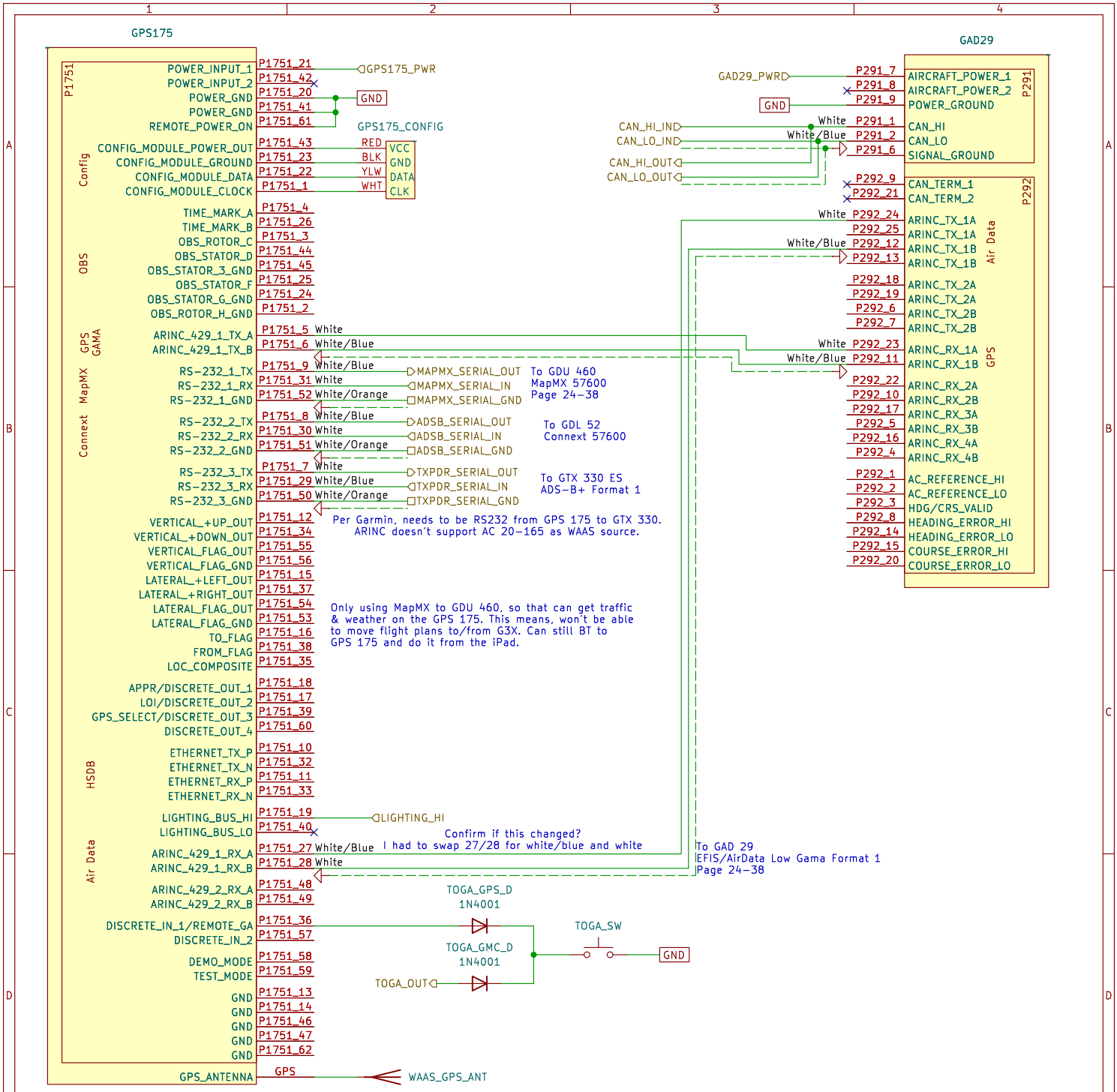

N877RV

Sheet: /Navigator/
File: navigator.kicad_sch

Title:

Size: A	Date: 2026-02-28	**Rev: 1.3**
KiCad E.D.A. 9.0.6		Id: 11/12

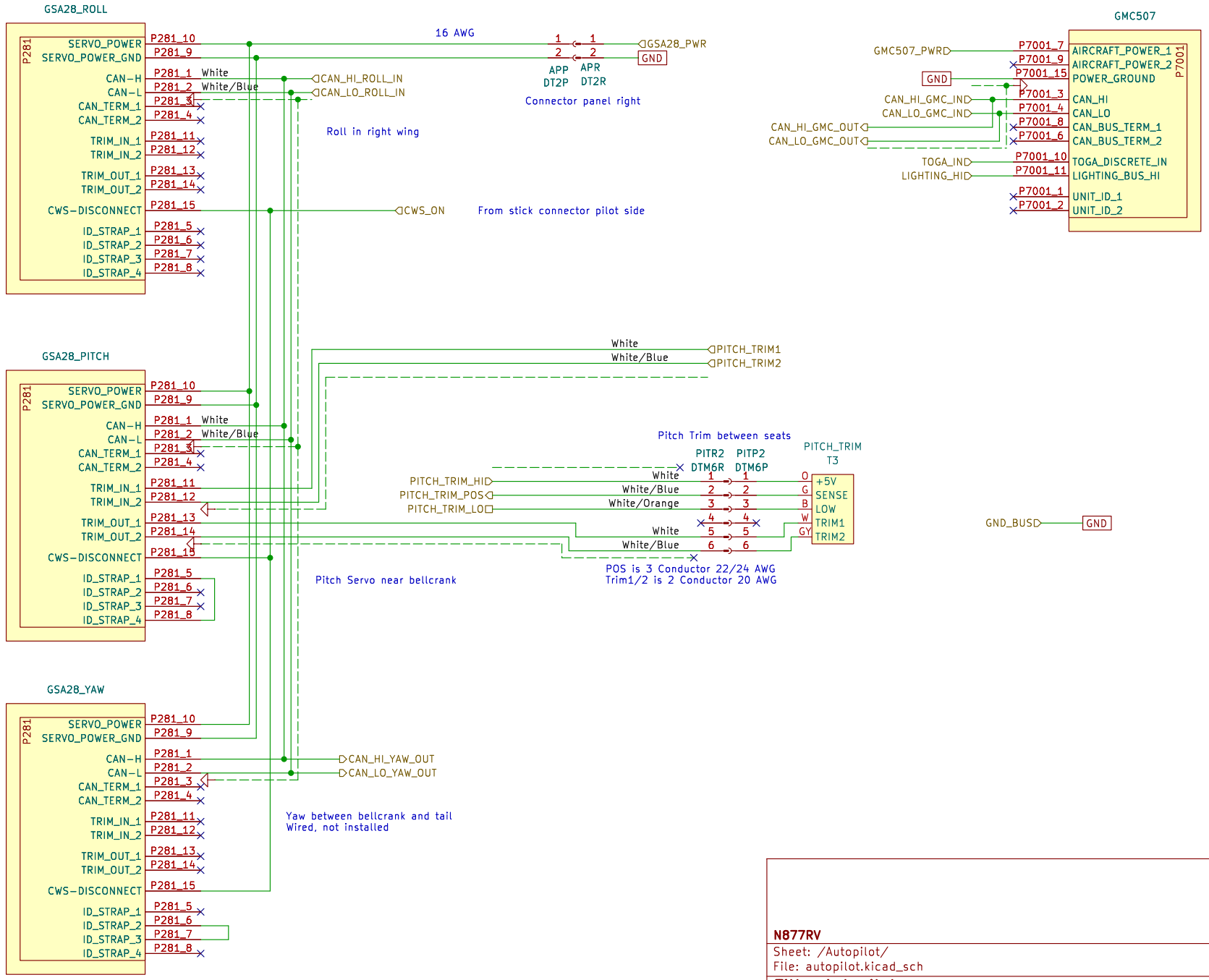

N877RV

Sheet: /Autopilot/

File: autopilot.kicad_sch

Title: Autopilot

Size: USLetter	Date: 2026-02-28	**Rev: 1.3**
KiCad E.D.A. 9.0.6		Id: 12/12