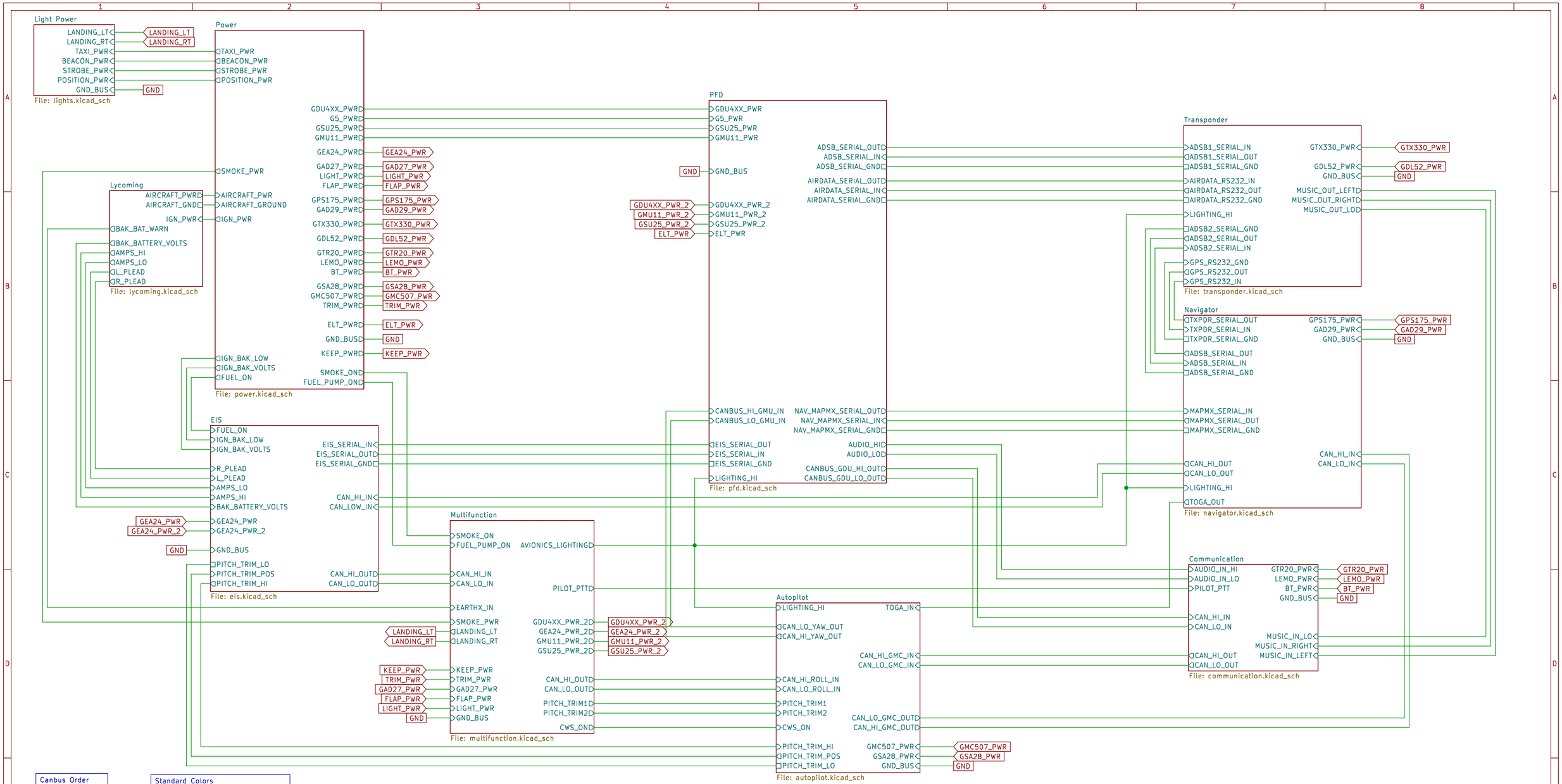

Canbus Order
G5
GSU25
GDU460
GTR20
GMC507
GAD29
GEA24
GAD27
<Connector>
GSA28 Roll
GSA28 Pitch
GSA28 Yaw
GMU11

Standard Colors

Canbus
Hi: White
Lo: White/Blue

Serial
Tx: White
Rx: White/Blue
Gnd: White/Orange

Audio
Left: White
Right: White/Blue
Lo: White/Orange

2 Wire Sensor
Hi: White
Lo: White/Blue

3 Wire Sensor
Signal: White
Lo (Ground): White/Blue
Reference (Power): White/Orange

Overview

File: overview.kicad_sch

N877RV

Sheet: /
File: electrical.kicad_sch

Title: Electrical Overview

Size: B	Date: 2026-02-28	Rev: 1.3
KiCad E.D.A. 9.0.7		Id: 2/12

N877RV System Overview

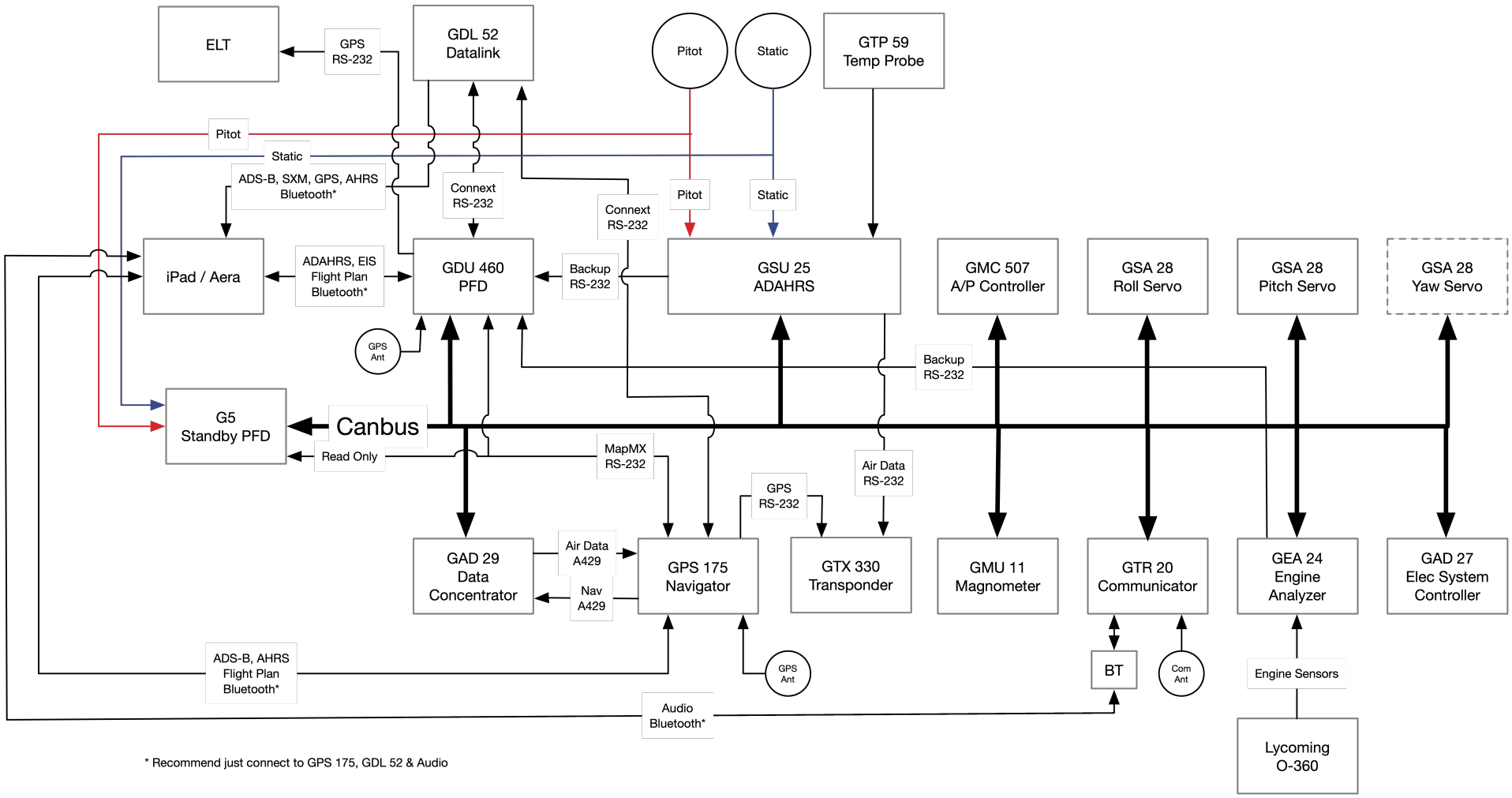

* Recommend just connect to GPS 175, GDL 52 & Audio

N877RV

Sheet: /Overview/
File: overview.kicad_sch

Title: System Overview

Size: USLetter	Date: 2026-02-28	**Rev: 1.3**
KiCad E.D.A. 9.0.7		Id: 1/12

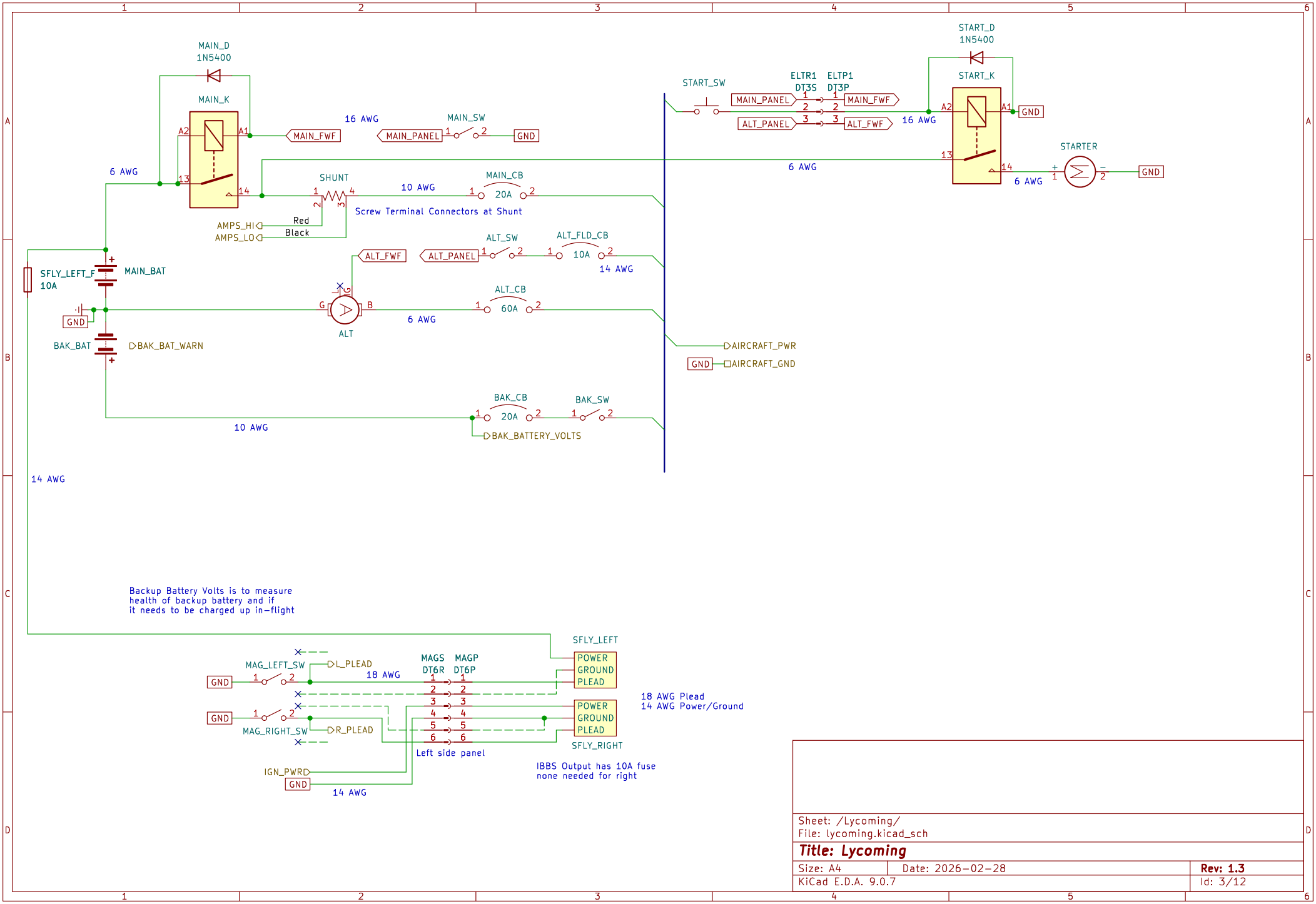

Sheet: /Lycoming/
File: lycoming.kicad_sch

Title: Lycoming

Size: A4	Date: 2026-02-28	**Rev: 1.3**
KiCad E.D.A. 9.0.7		Id: 3/12

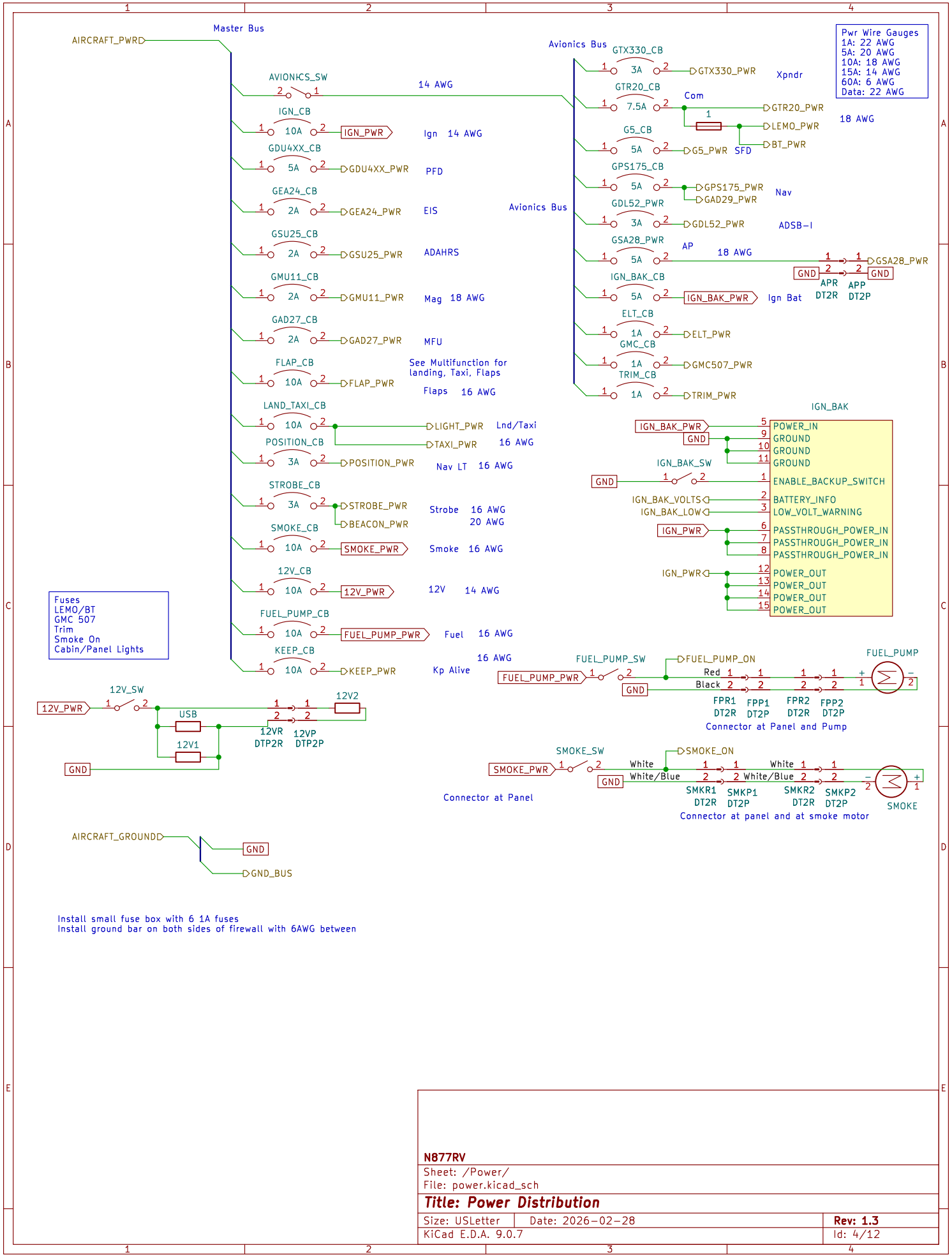

N877RV

Sheet: /Power/
File: power.kicad_sch

Title: Power Distribution

Size: USLetter	Date: 2026-02-28	Rev: 1.3
KiCad E.D.A. 9.0.7		Id: 4/12

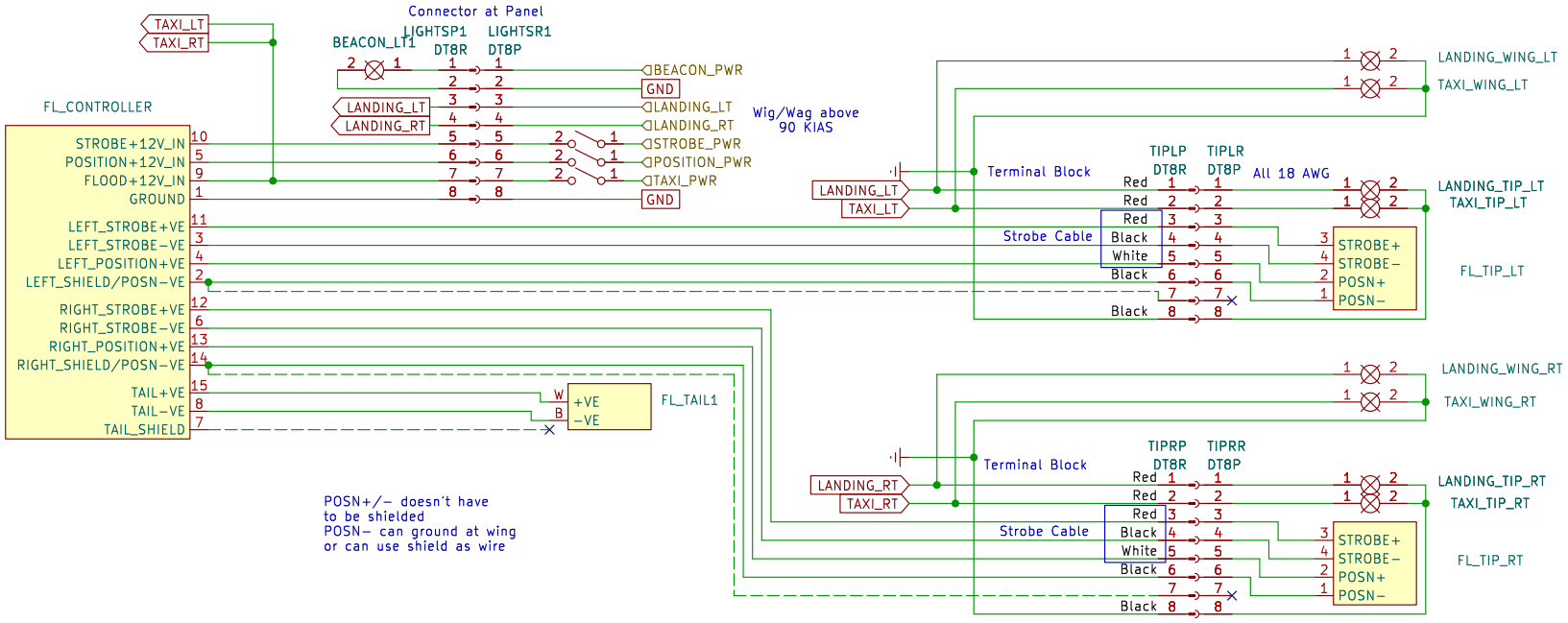

GND_BUS GND

Sheet: /Light Power/
File: lights.kicad_sch

Title:

Size: A4	Date: 2026−02−28	**Rev: 1.3**
KiCad E.D.A. 9.0.7		Id: 5/12

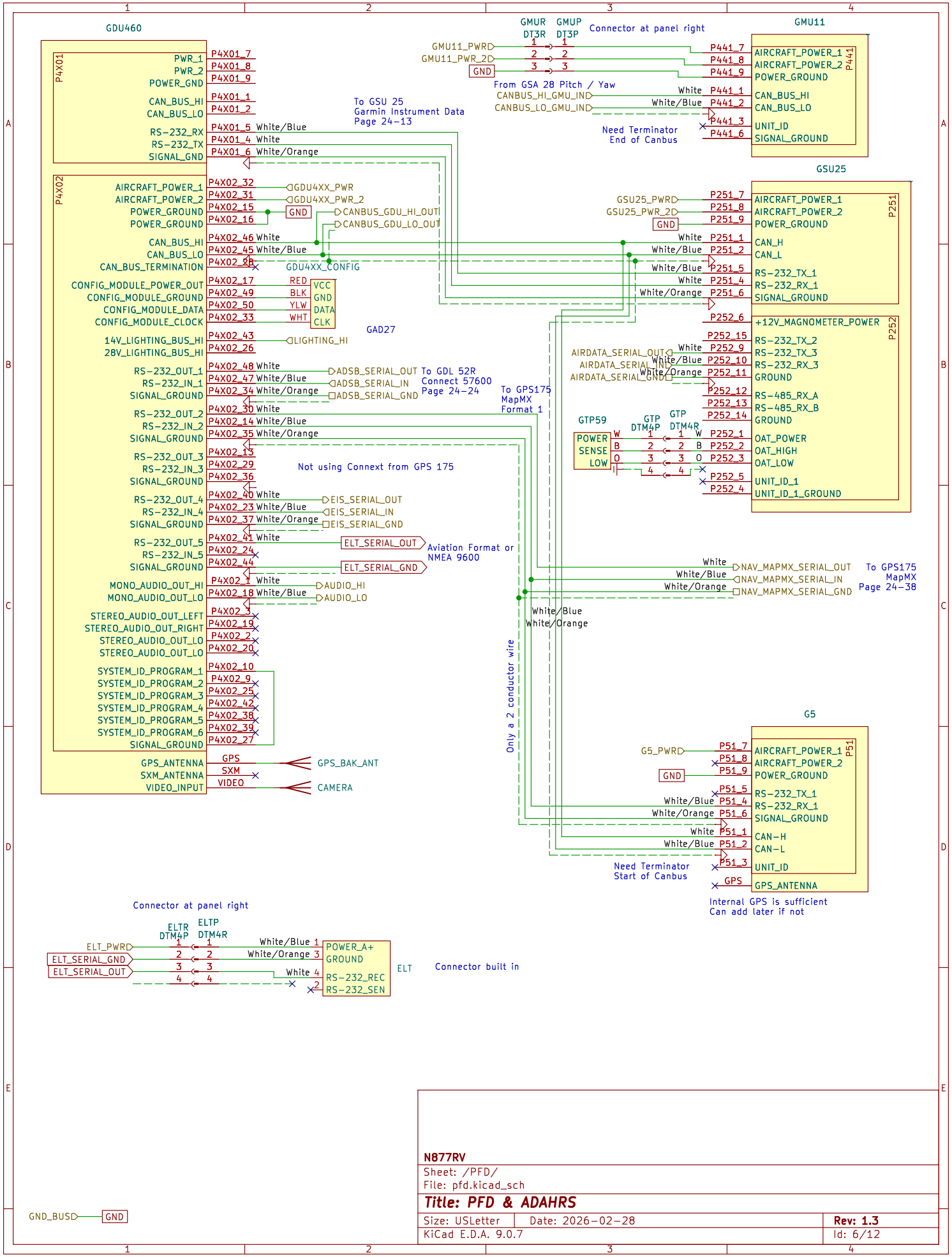

N877RV

Sheet: /PFD/

File: pfd.kicad_sch

Title: PFD & ADAHRS

Size: USLetter	Date: 2026-02-28	Rev: 1.3
KiCad E.D.A. 9.0.7		Id: 6/12

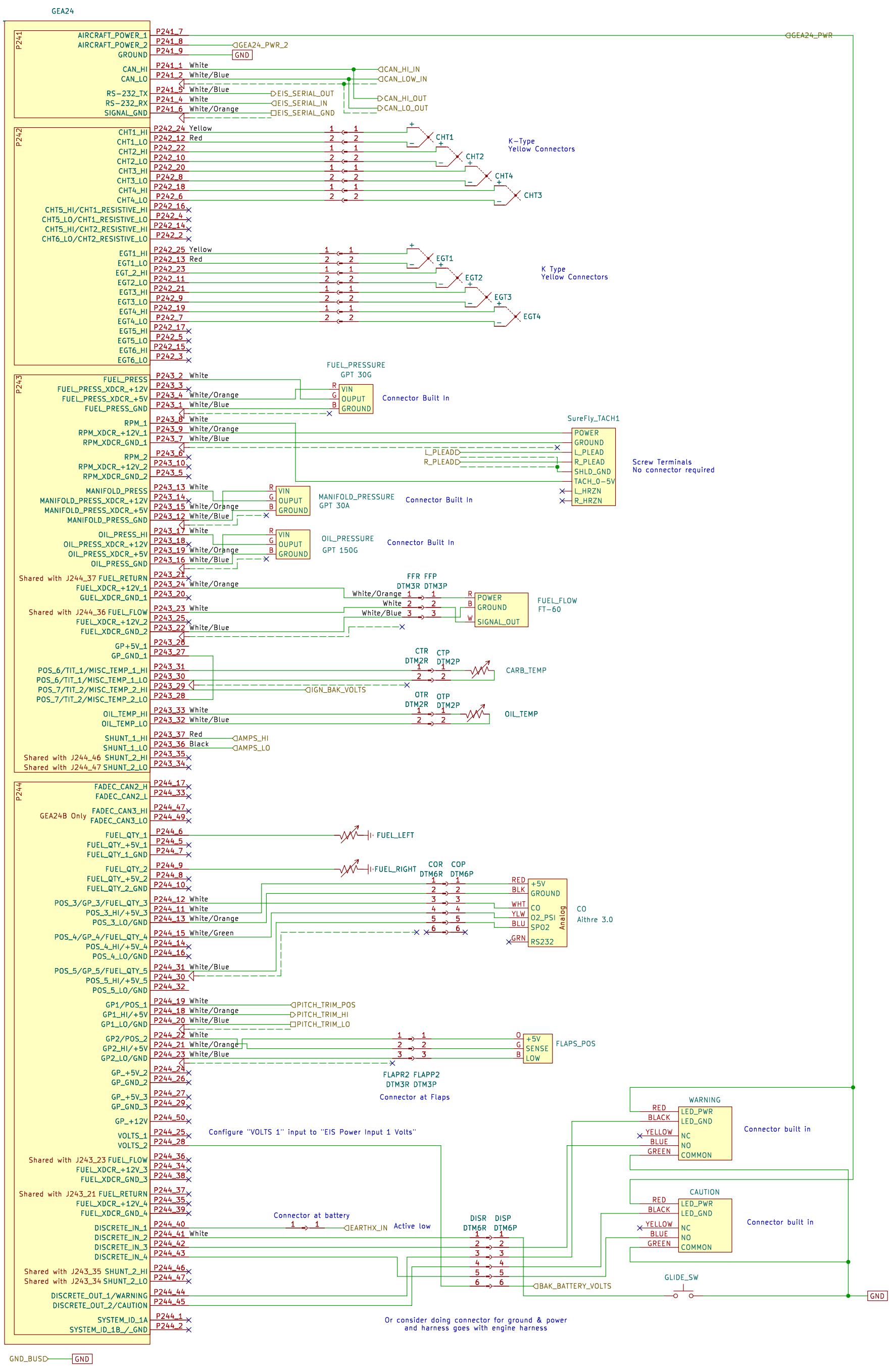

N877RV

Sheet: /EIS/

File: eis.kicad_sch

Title: EIS

Size: USLedger	Date: 2026-02-28	Rev: 1.3
KiCad E.D.A. 9.0.7		Id: 7/12

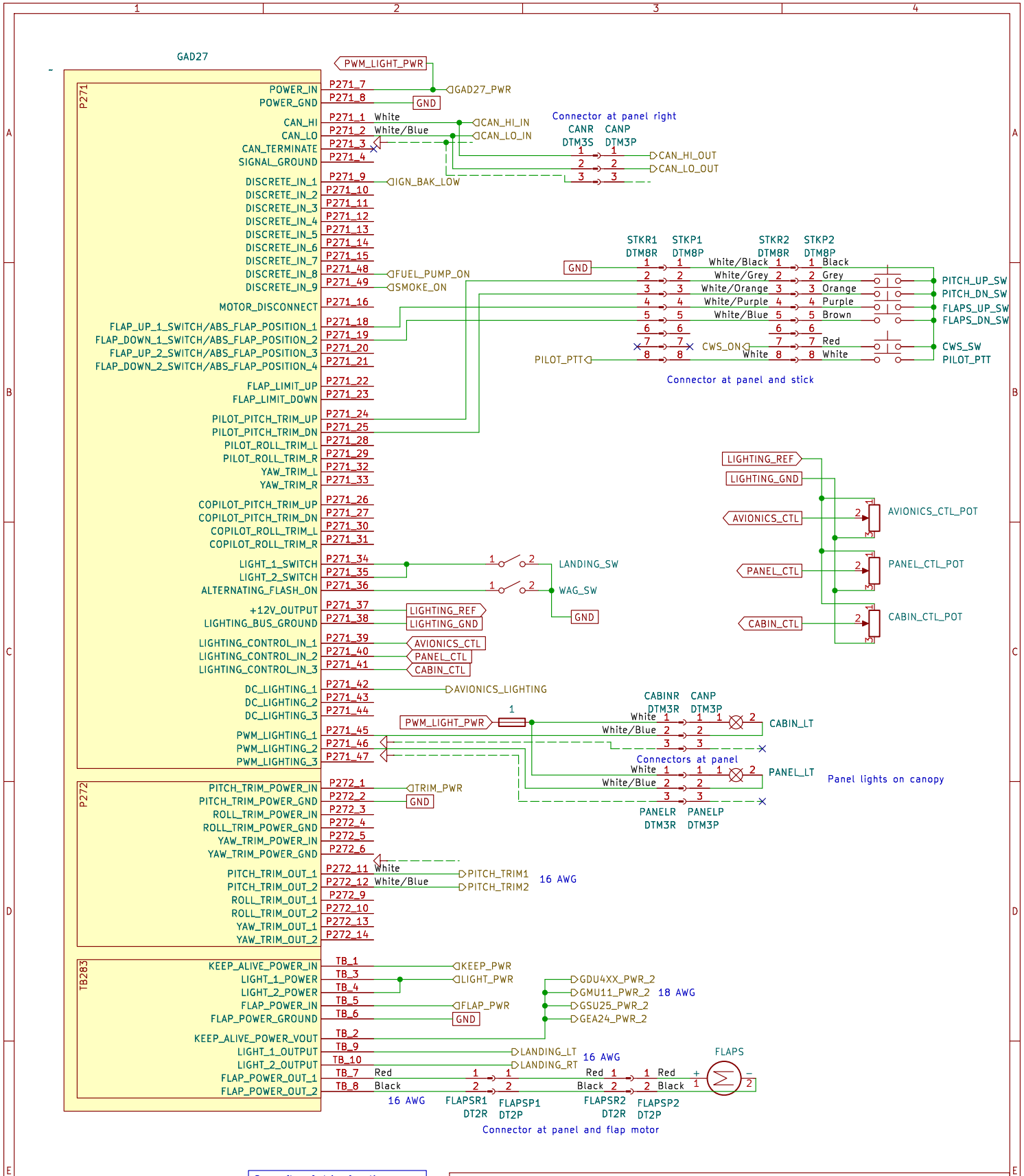
GAD27
P271
POWER_IN
POWER_GND
CAN_HI
CAN_LO
CAN_TERMINATE
SIGNAL_GROUND
DISCRETE_IN_1
DISCRETE_IN_2
DISCRETE_IN_3
DISCRETE_IN_4
DISCRETE_IN_5
DISCRETE_IN_6
DISCRETE_IN_7
DISCRETE_IN_8
DISCRETE_IN_9
MOTOR_DISCONNECT
FLAP_UP_1_SWITCH/ABS_FLAP_POSITION_1
FLAP_DOWN_1_SWITCH/ABS_FLAP_POSITION_2
FLAP_UP_2_SWITCH/ABS_FLAP_POSITION_3
FLAP_DOWN_2_SWITCH/ABS_FLAP_POSITION_4
FLAP_LIMIT_UP
FLAP_LIMIT_DOWN
PILOT_PITCH_TRIM_UP
PILOT_PITCH_TRIM_DN
PILOT_ROLL_TRIM_L
PILOT_ROLL_TRIM_R
YAW_TRIM_L
YAW_TRIM_R
COPILOT_PITCH_TRIM_UP
COPILOT_PITCH_TRIM_DN
COPILOT_ROLL_TRIM_L
COPILOT_ROLL_TRIM_R
LIGHT_1_SWITCH
LIGHT_2_SWITCH
ALTERNATING_FLASH_ON
+12V_OUTPUT
LIGHTING_BUS_GROUND
LIGHTING_CONTROL_IN_1
LIGHTING_CONTROL_IN_2
LIGHTING_CONTROL_IN_3
DC_LIGHTING_1
DC_LIGHTING_2
DC_LIGHTING_3
PWM_LIGHTING_1
PWM_LIGHTING_2
PWM_LIGHTING_3
P272
PITCH_TRIM_POWER_IN
PITCH_TRIM_POWER_GND
ROLL_TRIM_POWER_IN
ROLL_TRIM_POWER_GND
YAW_TRIM_POWER_IN
YAW_TRIM_POWER_GND
PITCH_TRIM_OUT_1
PITCH_TRIM_OUT_2
ROLL_TRIM_OUT_1
ROLL_TRIM_OUT_2
YAW_TRIM_OUT_1
YAW_TRIM_OUT_2
TB283
KEEP_ALIVE_POWER_IN
LIGHT_1_POWER
LIGHT_2_POWER
FLAP_POWER_IN
FLAP_POWER_GROUND
KEEP_ALIVE_POWER_VOUT
LIGHT_1_OUTPUT
LIGHT_2_OUTPUT
FLAP_POWER_OUT_1
FLAP_POWER_OUT_2
PWM_LIGHT_PWR
GAD27_PWR
GND
P271_7
P271_8
P271_1 White
P271_2 White/Blue
P271_3
P271_4
CAN_HI_IN
CAN_LO_IN
Connector at panel right
CANR DTM3S
CANP DTM3P
CAN_HI_OUT
CAN_LO_OUT
P271_9
IGN_BAK_LOW
P271_48
FUEL_PUMP_ON
P271_49
SMOKE_ON
STKR1 DTM8R
STKP1 DTM8P
STKR2 DTM8R
STKP2 DTM8P
White/Black
White/Grey
White/Orange
White/Purple
White/Blue
Black
Grey
Orange
Purple
Brown
Red
White
CWS_ON
PILOT_PTT
PITCH_UP_SW
PITCH_DN_SW
FLAPS_UP_SW
FLAPS_DN_SW
CWS_SW
PILOT_PTT
Connector at panel and stick
LIGHTING_REF
LIGHTING_GND
AVIONICS_CTL
PANEL_CTL
CABIN_CTL
AVIONICS_CTL_POT
PANEL_CTL_POT
CABIN_CTL_POT
P271_34
P271_35
P271_36
LANDING_SW
WAG_SW
P271_37
P271_38
P271_39
P271_40
P271_41
P271_42
AVIONICS_LIGHTING
P271_43
P271_44
P271_45
P271_46
P271_47
CABINR DTM3R
CANP DTM3P
CABIN_LT
Connectors at panel
PANEL_LT
Panel lights on canopy
PANELR DTM3R
PANELP DTM3P
P272_1
TRIM_PWR
P272_2
P272_3
P272_4
P272_5
P272_6
P272_11 White
P272_12 White/Blue
PITCH_TRIM1
PITCH_TRIM2
16 AWG
P272_9
P272_10
P272_13
P272_14
TB_1
TB_3
TB_4
TB_5
TB_6
KEEP_PWR
LIGHT_PWR
FLAP_PWR
GDU4XX_PWR_2
GMU11_PWR_2
GSU25_PWR_2
GEA24_PWR_2
18 AWG
TB_2
TB_9
TB_10
LANDING_LT
LANDING_RT
16 AWG
FLAPS
TB_7 Red
TB_8 Black
16 AWG
FLAPSR1 DT2R
FLAPSP1 DT2P
FLAPSR2 DT2R
FLAPSP2 DT2P
Connector at panel and flap motor
GND_BUS
Some flap & trim functions are in the EIS drawing, specifically the position sensors for the Flaps & Trim.
N877RV
Sheet: /Multifunction/
File: multifunction.kicad_sch
Title: Flaps, Lights & Trim
Size: USLetter
Date: 2026-03-04
Rev: 1.3.1
KiCad E.D.A. 9.0.7
Id: 8/12

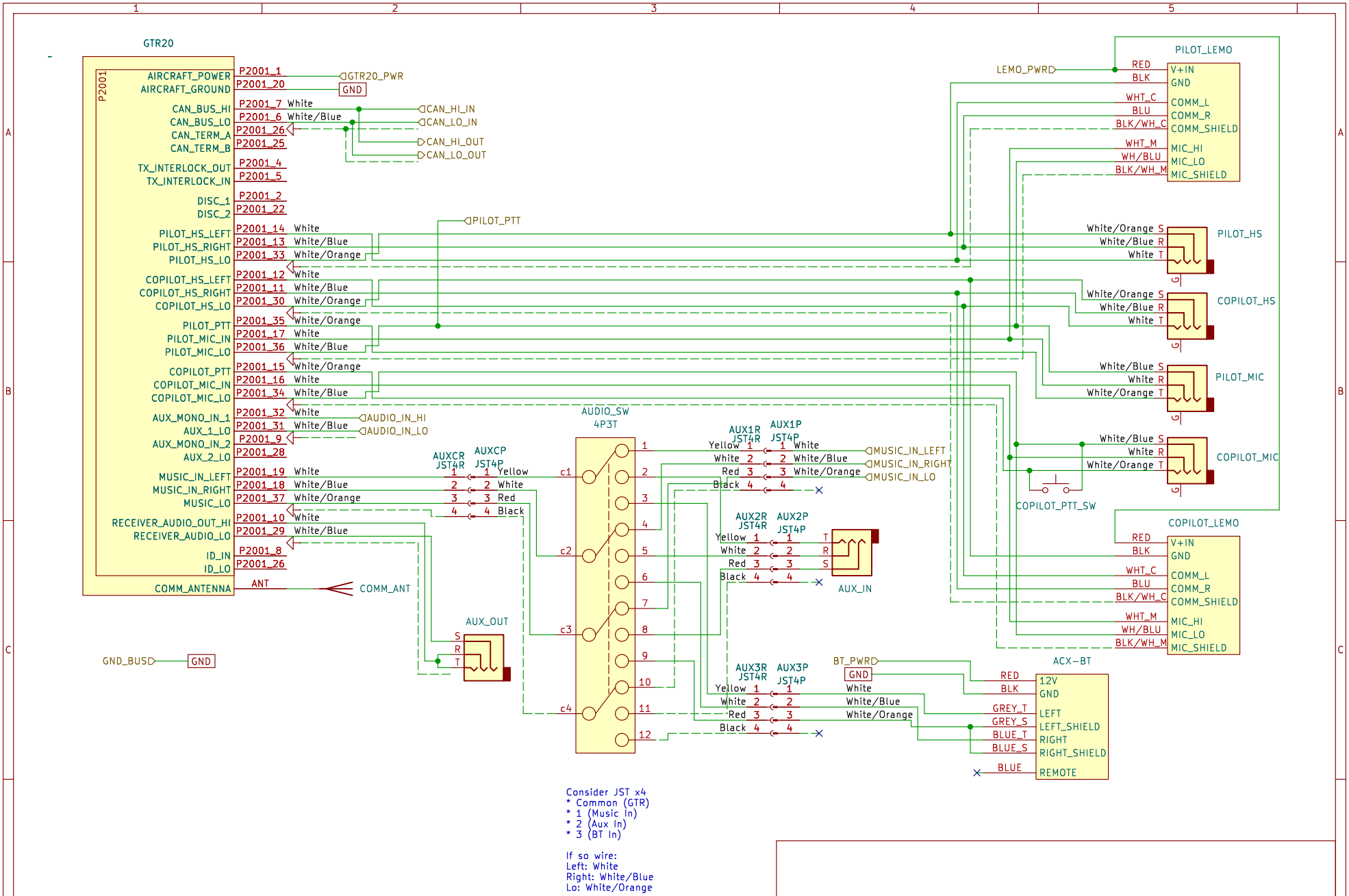

N877RV

Sheet: /Communication/

File: communication.kicad_sch

Title: Communication

Size: USLetter	Date: 2026-02-28	**Rev: 1.3**
KiCad E.D.A. 9.0.7		Id: 9/12

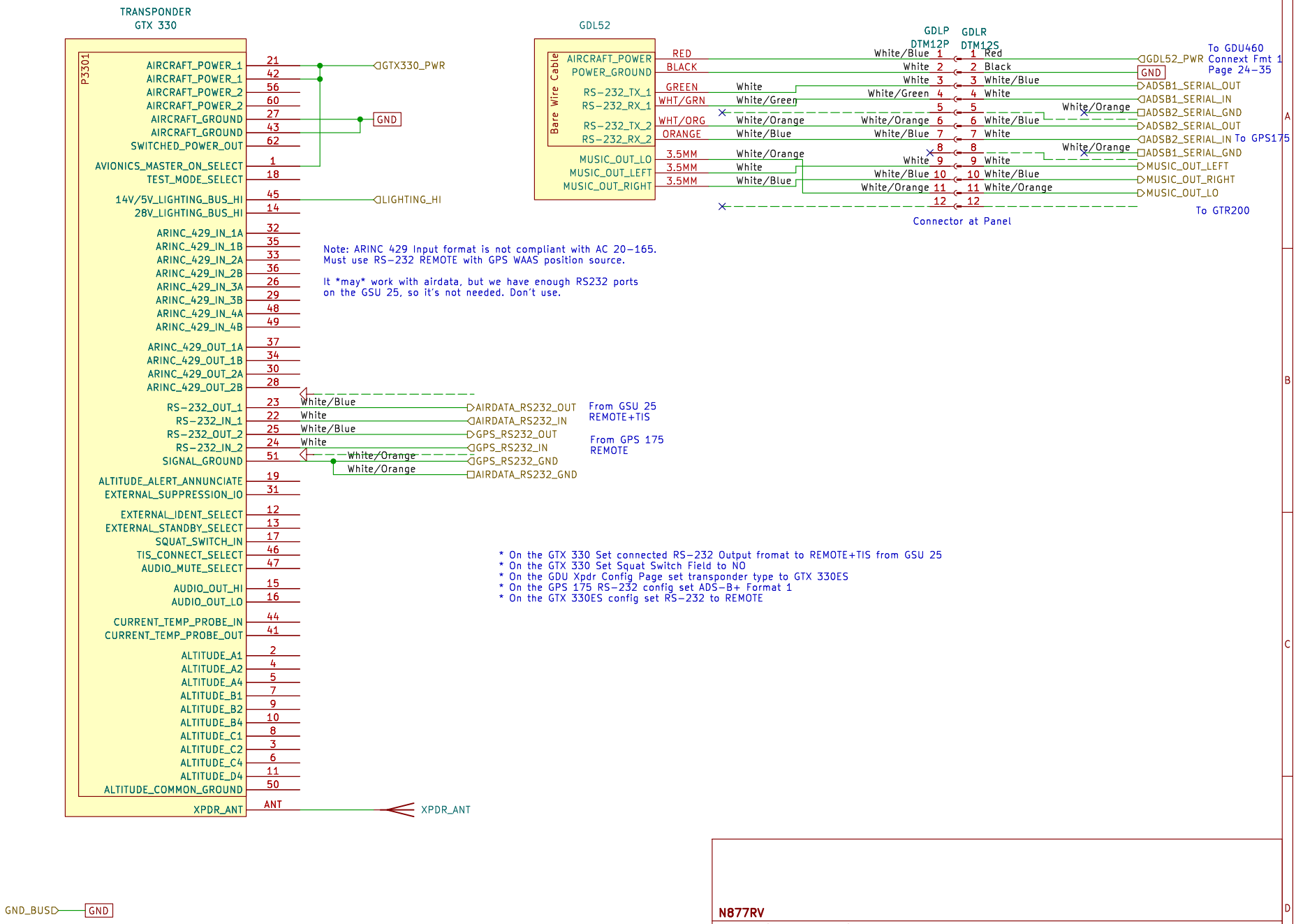

N877RV

Sheet: /Transponder/
File: transponder.kicad_sch

Title: Transponder

Size: USLetter	Date: 2026-02-28	**Rev: 1.3**
KiCad E.D.A. 9.0.7		Id: 10/12

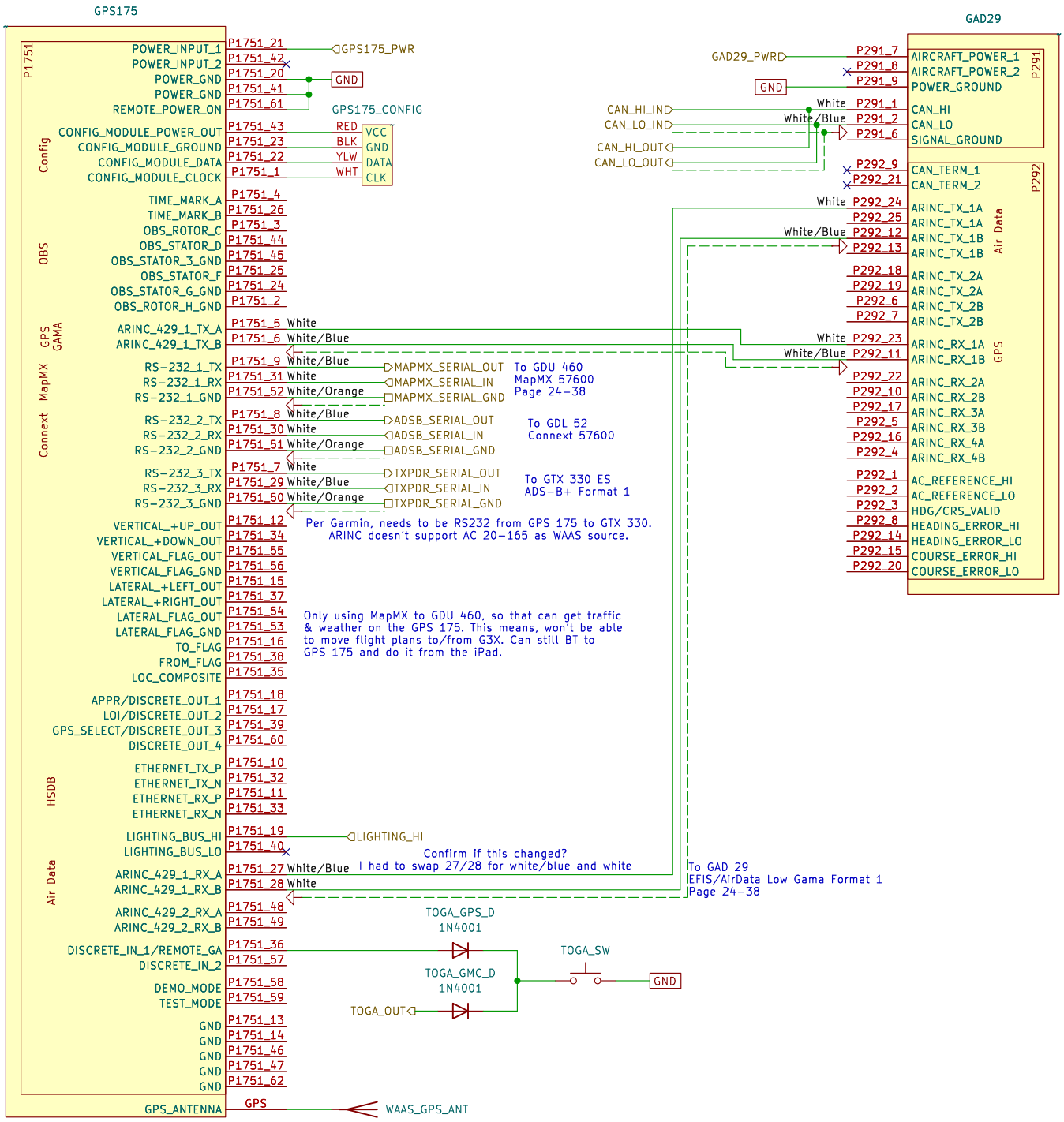

N877RV

Sheet: /Navigator/
File: navigator.kicad_sch

Title:

Size: A	Date: 2026-02-28	**Rev: 1.3**
KiCad E.D.A. 9.0.7		Id: 11/12

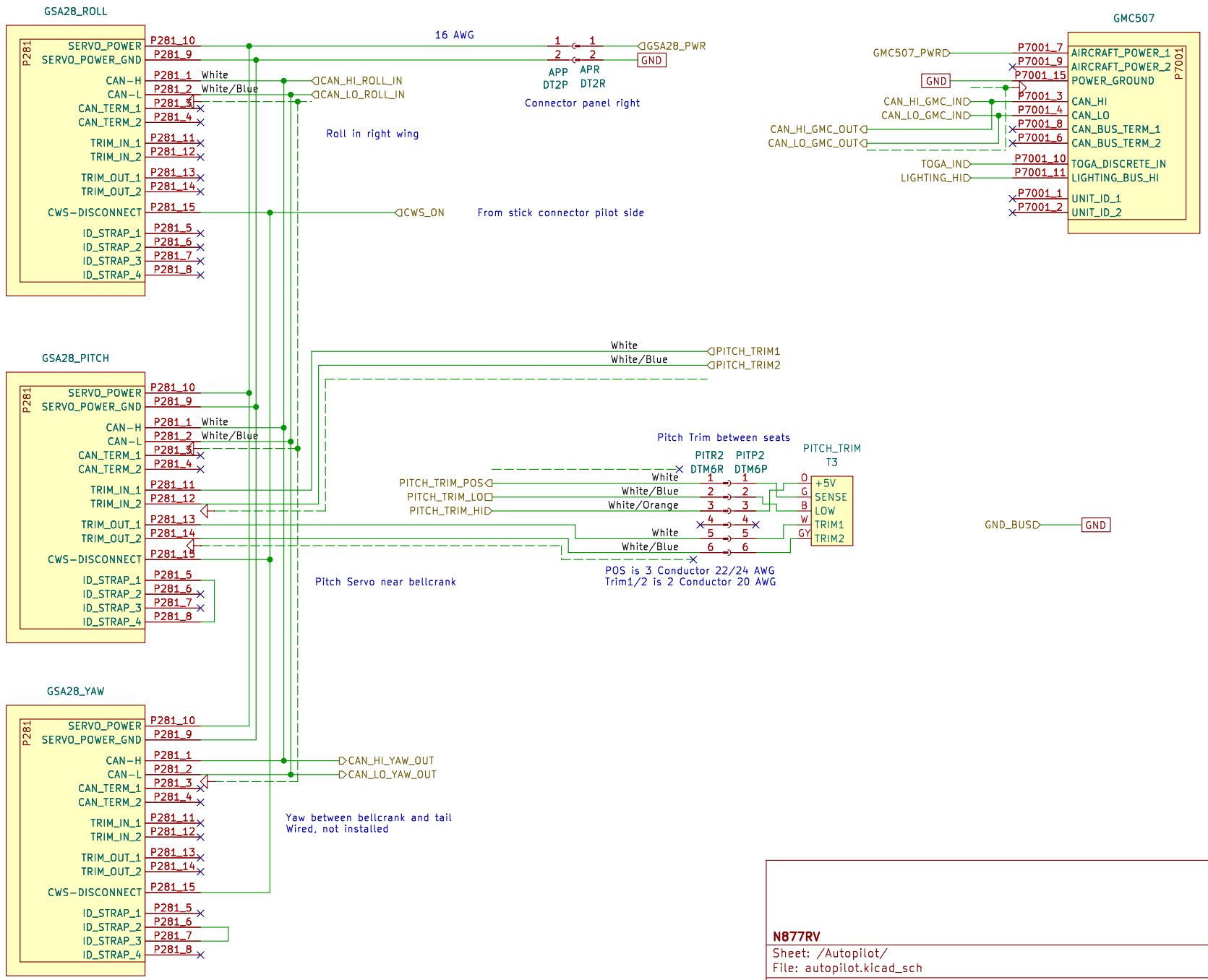

N877RV

Sheet: /Autopilot/

File: autopilot.kicad_sch

Title: Autopilot

Size: USLetter	Date: 2026-02-28	**Rev: 1.3**
KiCad E.D.A. 9.0.7		Id: 12/12