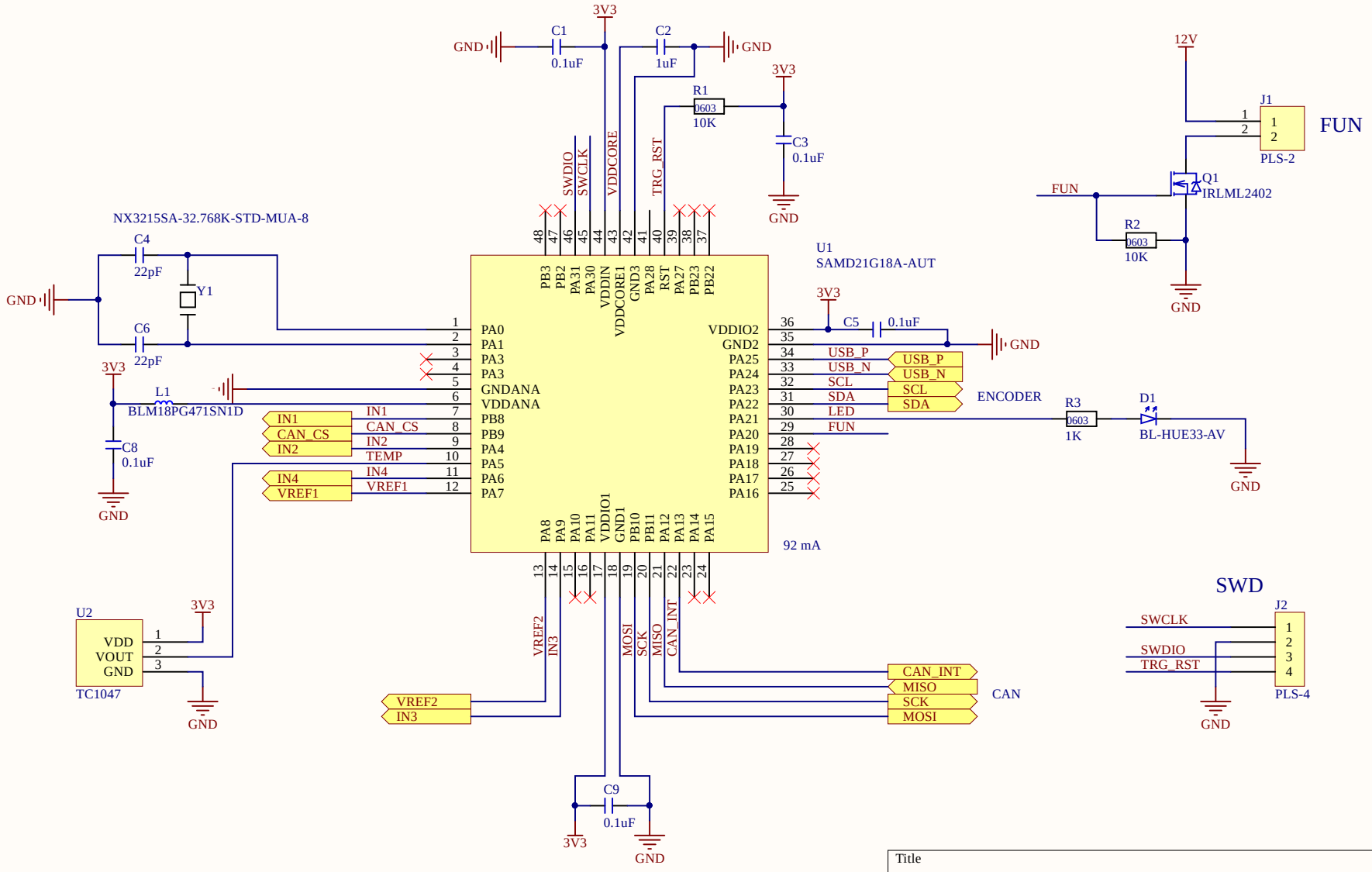

Title		
Size A4	Number	Revision
Date: 10.01.2020	Sheet of	
File: F:\PROJ\..\Core.SchDoc	Drawn By:	