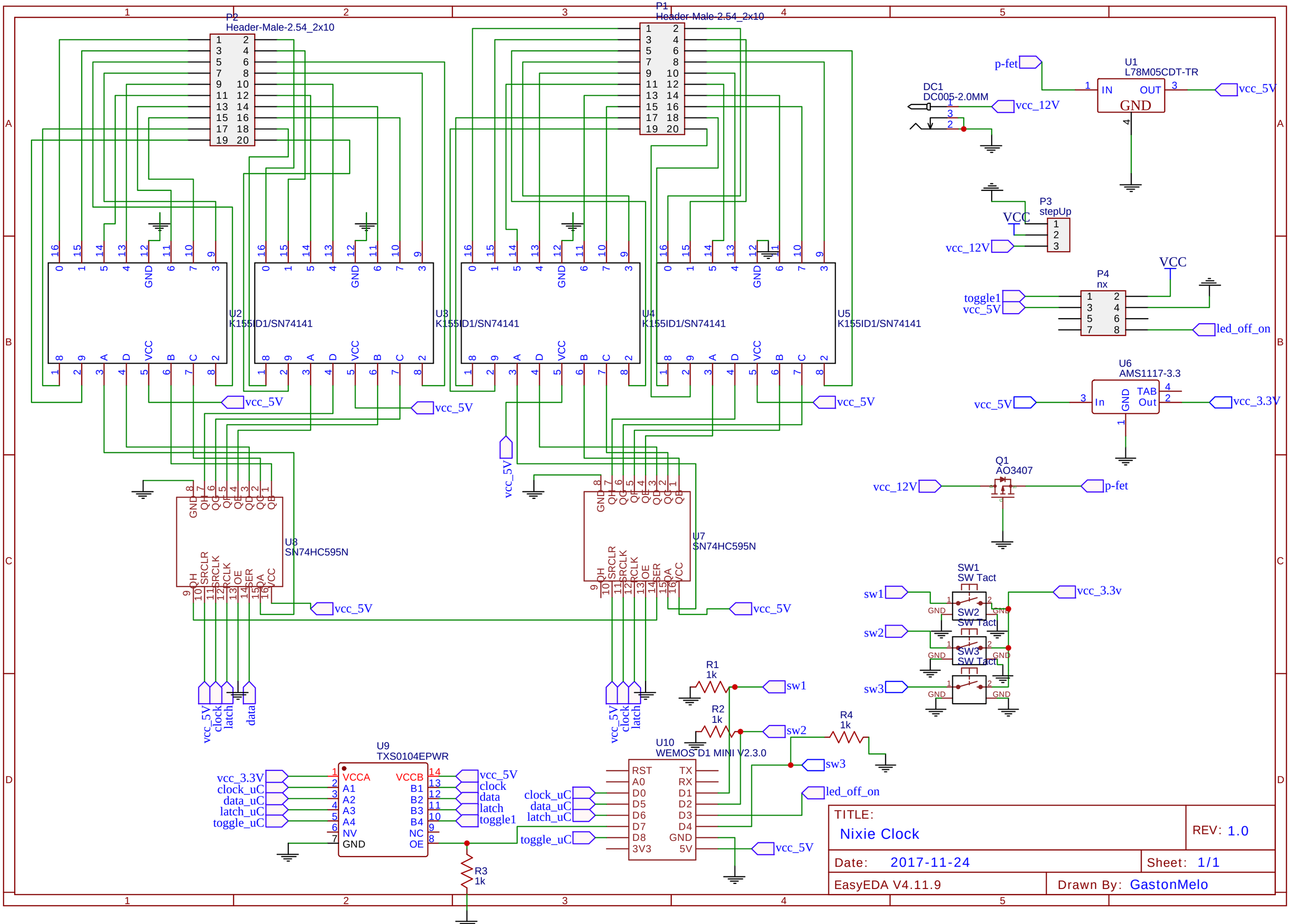
P2
Header-Male-2.54_2x10
P1
Header-Male-2.54_2x10
U2
K155ID1/SN74141
U3
K155ID1/SN74141
U4
K155ID1/SN74141
U5
K155ID1/SN74141
U8
SN74HC595N
U7
SN74HC595N
U1
L78M05CDT-TR
IN
OUT
GND
DC1
DC005-2.0MM
p-fet
vcc_12V
vcc_5V
P3
stepUp
VCC
P4
nx
toggle1
led_off_on
U6
AMS1117-3.3
In
Out
TAB
vcc_3.3V
Q1
AO3407
SW1
SW Tact
SW2
SW Tact
SW3
SW Tact
sw1
sw2
sw3
R1
1k
R2
1k
R4
1k
R3
1k
U9
TXS0104EPWR
VCCA
VCCB
A1
A2
A3
A4
NV
GND
B1
B2
B3
B4
NC
OE
clock_uC
data_uC
latch_uC
toggle_uC
clock
data
latch
toggle1
U10
WEMOS D1 MINI V2.3.0
RST
A0
D0
D5
D6
D7
D8
3V3
TX
RX
D1
D2
D3
D4
GND
5V
TITLE:
Nixie Clock
REV: 1.0
Date: 2017-11-24
Sheet: 1/1
EasyEDA V4.11.9
Drawn By: GastonMelo