Audio Amplifier Design

Gauri Krishnan
International Institute of Information Technology
Hyderabad, India
gauri.krishnan@students.iiit.ac.in
2024102073

Sukeerthi Kattamuri
International Institute of Information Technology
Hyderabad, India
sukeerthi.kattamuri@students.iiit.ac.in
2024102074

***Abstract*—This project presents the design and simulation of a multi-stage audio amplifier capable of amplifying low-level input audio signal. The system is designed to achieve an overall voltage gain of approximately 500 for input signals in the range of 10–20 mV peak-to-peak. The amplifier consists of a differential amplifier used as a pre-amplifier for noise reduction and initial gain, followed by a common emitter stage that provides the majority of the voltage amplification. A bandpass filter is then used to restrict the signal to the human audible frequency range. Finally, a power amplifier stage increases the signal power to effectively drive the load.**

I. Introduction

The primary function of the audio amplifier is to amplify a low-magnitude input audio signal and deliver a sufficiently strong output to drive a speaker. The design specifications require an input signal in the range of 10–20 mV peak-to-peak to achieve an overall voltage gain of 500.

To meet this requirement, the amplifier is implemented using multiple stages. The first stage is a differential amplifier that serves as the pre-amplifier. Its main purpose is to reduce noise present at the input while providing an initial level of voltage gain. This improves signal quality before further amplification. The second stage consists of a common emitter (CE) amplifier. This stage provides the majority of the voltage gain required to meet the overall gain specification of 500. After sufficient amplification, the signal is passed through a bandpass filter. This filter restricts the frequency range to the human audible spectrum (20 Hz to 20 kHz), removing unwanted low-frequency and high-frequency components. The final stage is the power amplifier. Its function is to increase the signal power to a level capable of driving the specified load effectively.

Thus our final circuit consists of:

- Mic Circuit
- Pre-Amplifier
- CE Amplifier
- Bandpass Filter
- Power Amplifier
- Speaker

The design specifications are given below:

TABLE I: Audio Amplifier Design Specifications

Parameter	Specification
Input Voltage (Microphone)	10–20 mV (peak-to-peak)
Input Frequency Range	20 Hz – 20 kHz
Voltage Gain	500
Power Output	≈ 1.5 W
Load Impedance	$\approx 10\,\Omega$

II. MICROPHONE CIRCUIT

The microphone can be modeled as a resistor that changes on the basis of the intensity of the incoming sound. These changes are converted into voltage variations so the resulting signal can be given as input to the pre-amplifier stage.

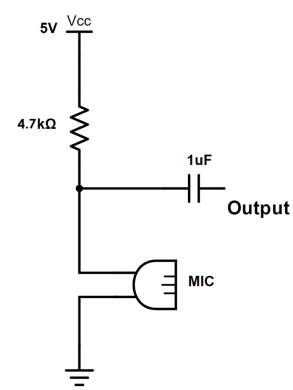

Fig. 1: Mic Circuit Diagram

III. PRE - AMPLIFIER STAGE

The pre-amplifier stage amplifies the difference between two input voltages while suppressing any signal common to both inputs. Since the microphone input signal is very weak, it

is highly susceptible to noise. If noise is not removed at this stage, it will continue to be amplified in the subsequent stages. Therefore, the pre-amplifier must provide good noise rejection along with moderate voltage gain.

In our implementation, the input signal is applied to the first transistor of the differential pair, while the second transistor is grounded. This configuration allows for differential operation and improved noise immunity.

A. Gain Derivation

Consider the small-signal model of the BJT differential amplifier. For small-signal operation:

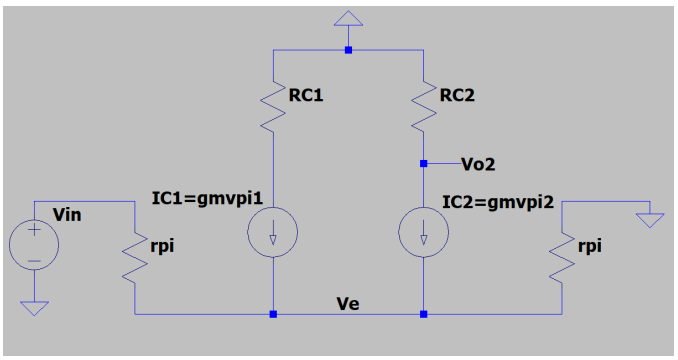

Fig. 2: Pre-Amplifier Small Signal Model

$$i_{c1} = g_m v_{\pi 1}, \qquad i_{c2} = g_m v_{\pi 2}$$

From the input loop,

$$V_{in} - v_{\pi 1} + v_{\pi 2} = 0$$

$$\Rightarrow V_{in} = v_{\pi 1} - v_{\pi 2} \tag{1}$$

Applying KCL at the common emitter node:

$$\frac{v_{\pi 1}}{r_\pi} + \frac{v_{\pi 2}}{r_\pi} + g_m v_{\pi 1} + g_m v_{\pi 2} = 0$$

$$\left(g_m + \frac{1}{r_\pi}\right)(v_{\pi 1} + v_{\pi 2}) = 0$$

$$\Rightarrow v_{\pi 1} = -v_{\pi 2} \tag{2}$$

The output is taken from one collector:

$$v_{o_2} = -g_m v_{\pi 2} R_C$$

Using (1) and (2), substitute $v_{\pi 2} = -\frac{V_{in}}{2}$:

$$\Rightarrow v_{o_2} = g_m \left(\frac{V_{in}}{2}\right) R_C$$

Now,

$$A_v = \frac{v_o}{V_{in}} = \frac{g_m R_C}{2}$$

Since

$$r_e = \frac{1}{g_m}$$

$$A_v = \frac{R_C}{2r_e}$$

If an external emitter resistance R_E is added:

$$A_v = \frac{R_C}{2(r_e + R_E)}$$

B. Target Gain and Parameter Calculation

Target gain, $A_v = 20$

We assume:

$$R_C = 5\,k\Omega$$

Using DC bias condition:

$$V_{CC} - I_C R_C = V_{CE}$$

Taking:

$$V_{CE} = \frac{1}{2} V_{CC}$$

$$I_C = \frac{2.5}{5 \times 10^3} = 5 \times 10^{-4} = 500\,\mu A$$

Tail current:

$$I_T = 2I_C = 1000\,\mu A$$

Tail resistance:

$$-R_T I_T + 5 = 0$$

$$R_T = \frac{5}{1000\,\mu A} = 5\,k\Omega$$

Small-signal emitter resistance:

$$r_e = \frac{V_T}{I_C} \approx 52\,\Omega$$

Differential gain:

$$A_d = \frac{R_C}{2(r_e + R_E)}$$

Substituting target gain:

$$20 = \frac{5000}{2(52 + R_E)}$$

$$R_E = 72\,\Omega$$

After iterating values, we end up with $R_E = 55\Omega$ and $R_T = 2.15\,k\Omega$

C. Common Mode Rejection Ratio (CMRR)

The performance of the differential amplifier is evaluated using differential gain, common-mode gain, and the Common Mode Rejection Ratio (CMRR). A high CMRR indicates effective suppression of common-mode noise.

a) Theoretical Expressions:

- Differential Gain (A_d) represents the amplification of the difference between the two input voltages.
- Common-mode Gain (A_{cm}) represents the amplification of signals common to both inputs. Ideally, this should be very small.
- Common Mode Rejection Ratio (CMRR) is defined as:

$$\text{CMRR} = 20\log\left(\frac{A_d}{A_{cm}}\right)$$

b) Measured Values: The following values were obtained from circuit simulation:

- Differential Gain

$$A_d = \frac{430.17}{20} = 21.5$$

- Common Mode Gain:

$$A_{cm} = 2.268$$

$$\text{CMRR} = 20\log\left(\frac{21.5}{2.268}\right) = 19.53\,\text{dB}$$

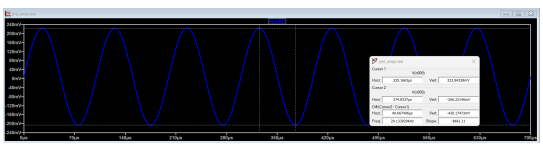

Fig. 3: Pre-Amp Differential Gain (A_d)

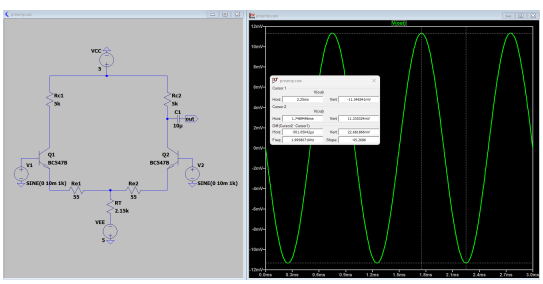

Fig. 4: Pre-Amp Common Mode Gain(A_c)

D. Input and Output Impedance Analysis

The pre-amplifier should have:

- High input impedence (R_{in}), so that it does not load the microphone source.
  From Fig 14a, input impedence = $\frac{1}{2.362} = 42.33k\Omega$
- Low output impedence (R_{out}), so that it can effectively drive the next stage.
  From Fig 14b, output impedence = $\frac{1V}{200.48\mu A} = 4.9k\Omega$

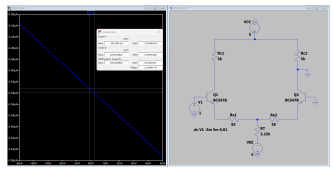

(a) Input Impedance Measurement

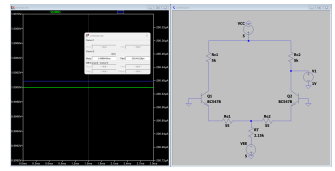

(b) Output Impedance Measurement

Fig. 5: Pre-amplifier impedance measurements

E. Waveforms

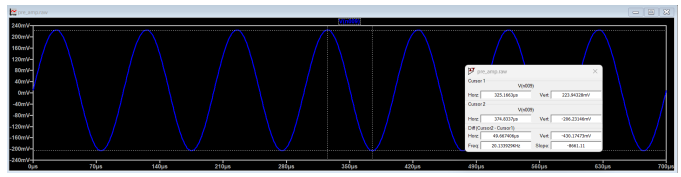

Fig. 6: Pre-Amp Gain

Fig 7a shows Pre-Amp output in hardware when it is not connected to the rest of the circuit.

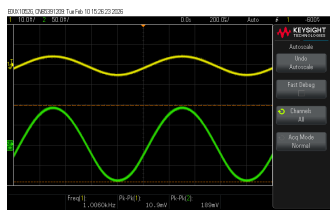

(a) Output for (for 10mV input)

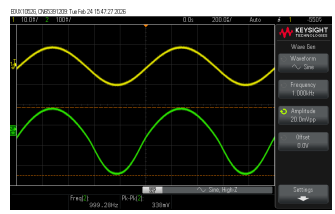

(b) Output in full circuit

Fig. 7: Pre-amplifier output in hardware

IV. Gain Stage

A. Small Signal Gain Calculation

Consider the small-signal model of the CE amplifier.

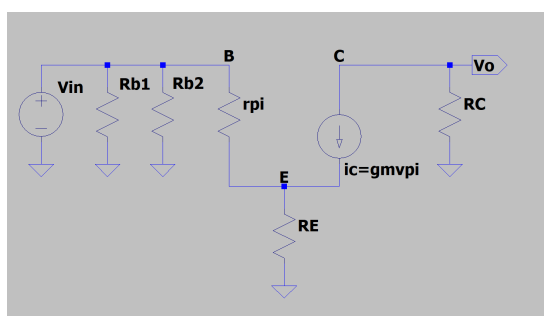

Fig. 8: CE Small Signal Model

Since the output current flows through the collector resistor,

$$i_o = -i_c$$

$$\Rightarrow v_o = -i_c R_C = -g_m v_\pi R_C \tag{1}$$

Applying KVL at the input loop,

$$v_{in} = v_\pi + v_E$$

Also,

$$v_E = i_E R_E$$

Taking $i_E \approx i_C$,

$$v_{in} = v_\pi + i_c R_E = v_\pi + g_m v_\pi R_E$$

$$\Rightarrow v_{in} = v_\pi(1 + g_m R_E)$$

Thus

$$v_\pi = \frac{v_{in}}{1 + g_m R_E}$$

Substituting into equation (1),

$$v_o = -g_m R_C \left(\frac{v_{in}}{1 + g_m R_E} \right)$$

Therefore the voltage gain is

$$A_v = \frac{v_o}{v_{in}} = \frac{-g_m R_C}{1 + g_m R_E}$$

Since

$$r_e = \frac{1}{g_m} \Rightarrow A_v = -\frac{R_C}{r_e + R_E}$$

B. Target Gain and Parameter Calculation

The overall gain requirement of the amplifier is approximately 500. However, because of the 0.6V drop across the BE junction of the transistor, the voltage swing reduces. Achieving a gain of 500 is nearly impossible so we aim for a gain of 450. The pre-amplifier stage already provides a gain of approximately 20 so the CE amplifier stage is designed to provide a gain of about 25 so that the combined gain meets the required specification.

Target gain, $A_v = 25$
We assume $R_C = 5.6\,k\Omega$

The small signal gain of the CE amplifier is

$$|A_v| = \frac{g_m R_C}{1 + g_m R_E}$$

Using the relation

$$g_m = \frac{i_c}{V_T} \Rightarrow |A_v| = \frac{i_c R_C}{V_T + i_c R_E}$$

Rearranging,

$$A_v V_T + A_v i_c R_E = i_c R_C$$

$$A_v V_T = i_c(R_C - A_v R_E)$$

$$i_c = \frac{A_v V_T}{R_C - A_v R_E} \tag{1}$$

For proper transistor operation, the condition

$$V_C - V_E > 0.7V$$

must be satisfied.
Considering $i_E \approx i_C$,

$$V_C = V_{CC} - i_c R_C$$

$$V_E = i_E R_E$$

Substituting,

$$V_{CC} - i_c R_C - i_c R_E - V_{EE} > 0.7$$

$$10 - i_c(R_C + R_E) > 0.7$$

$$9.3 > i_c(R_C + R_E)$$

Substituting equation (1):

$$\frac{A_v V_T}{R_C - A_v R_E}(R_C + R_E) < 9.3$$

Using $A_v = 25, \quad V_T \approx 26\,mV$

$$\frac{0.65(5.6k + R_E)}{5.6k - 25R_E} < 9.3$$

Solving, we obtain

$$R_E < 207.5\,\Omega$$

Now for calculating the values of resistances R_{B_1} and R_{B_2},
From the gain expression,

$$A_v = 25 = \frac{5.6k\, i_c}{26 \times 10^{-3} + 20 i_c}$$

$$25(26 \times 10^{-3} + 20 i_c) = 5600 i_c$$

$$0.650 + 500 i_c = 5600 i_c$$

$$i_c = \frac{0.65}{600} \approx 1\,mA$$

Using the base-emitter loop, and taking $i_e \approx i_c$

$$V_B - 0.7 - i_e R_E + 5 = 0$$

$$V_B - 0.7 - 0.2 + 5 = 0$$

$$V_B = -4.1\,V$$

$$\frac{V_{CC} - V_B}{R_{B1}} = \frac{V_B - V_{EE}}{R_{B2}}$$

Thus, $R_{B_1} : R_{B_2}$ = 10.11:1 The values we took after trial and error are $R_{B_1} = 200k\Omega$ $R_{B_2} = 18k\Omega$
Thus, the initial values taken were $R_C = 5.6k\Omega$ and $R_E = 200\Omega$. However, once we connected the following stages, there was a drop in gain due to loading. To account for this, we increased gain in the CE stage by increasing R_C to $7.2k\Omega$. This induced clipping, and to combat this, we changed R_E to 270Ω.

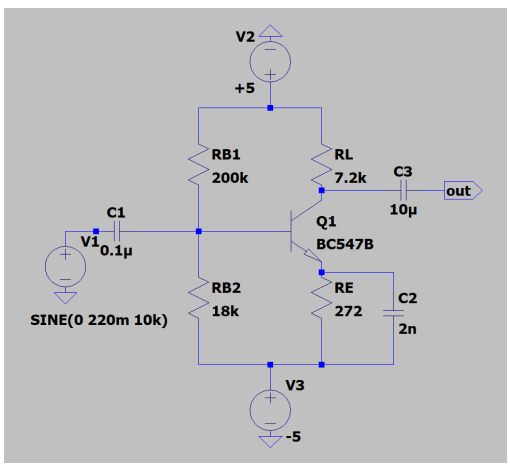

Fig. 9: CE circuit

C. Biasing Design and Active Region Verification

The base of the transistor is biased using the voltage divider formed by the resistors R_{B1} and R_{B2}. This voltage divider sets a stable DC bias voltage V_B at the base terminal. The chosen resistor values ensure that the base voltage can be fixed at a desired level so that the transistor operates in the correct region.

$$V_B = \frac{V_{CC}R_{B2} + V_{EE}R_{B1}}{R_{B1} + R_{B2}}$$

By plugging in the values, we obtain the bias point in the circuit as $-4.17V$ From the simulations, we measure $V_C = 0.5V$ and $V_E = -4.8V$, which shows that the transistors are in the active region of operation.

D. Waveform Verification

1) Simulation: Comparing the gain after CE stage alone and with the full circuit:

2) Hardware: Fig 12 shows the output of CE-Amp in the final circuit (with all stages connected).

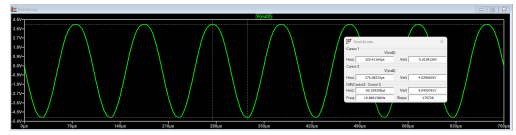

Fig. 10: PreAmp and Gain stage integration.

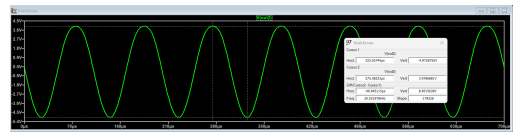

Fig. 11: PreAmp and CE stage gain with full circuit.

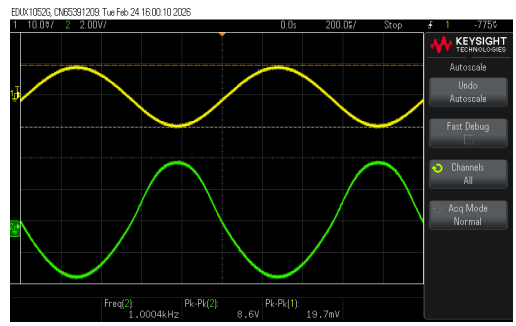

Fig. 12: Gain after CE stage in the fully connected circuit.

V. Filter Stage

The bandpass filter is used to remove noise and unwanted frequency components that lie outside the audible range. The desired passband is from 20 Hz to 20 kHz, ensuring that only frequencies within the human hearing range are allowed to pass while signals outside this range are attenuated. The cutoff frequencies are selected such that there is a small margin around the passband to account for the -3 dB cutoff points of the filter. Although the desired passband of the audio amplifier is the human audible range of 20 Hz to 20 kHz, the filter was designed with cutoff frequencies slightly beyond this range to ensure that there is no attenuation at 20 Hz and 20 kHz. As a result, frequencies near 20 Hz and 20 kHz remain within the flat region of the passband, maintaining consistent audio quality across the desired frequency spectrum.

An active bandpass filter configuration is used in this design, which employs operational amplifiers rather than relying solely on passive components. The use of an active filter provides better control over the gain and allows a sharper and more well-defined frequency response compared to passive bandpass filters.

A. AC Response Derivation

The active bandpass filter is implemented using an operational amplifier in the inverting configuration. The input network (R_1, C_1) forms the high-pass section, while the feedback network (R_2, C_2) forms the low-pass section.

Since an ideal op-amp has very high input impedance, no current flows into the input terminals. Therefore, the currents through the input and feedback networks are equal:

$$\frac{V_{in} - V^-}{Z_1} = \frac{V^- - V_{out}}{Z_2}$$

For an ideal op-amp operating with negative feedback,

$$V^- = V^+ = 0$$

Thus,

$$\frac{V_{out}}{V_{in}} = -\frac{Z_2}{Z_1}$$

The impedances of the input and feedback networks are

$$Z_1 = R_1 + \frac{1}{sC_1}$$

$$Z_2 = \frac{R_2}{1 + sR_2C_2}$$

Substituting into the gain expression,

$$\frac{V_{out}}{V_{in}} = -\frac{R_2}{1 + sR_2C_2} \cdot \frac{sC_1}{sR_1C_1 + 1}$$

Therefore, the transfer function of the active bandpass filter is

$$H(s) = \frac{V_{out}}{V_{in}} = \frac{-sR_2C_1}{(1 + sR_2C_2)(1 + sR_1C_1)}$$

Letting $s = j\omega$,

$$H(j\omega) = \frac{-j\omega R_2C_1}{(1 + j\omega R_2C_2)(1 + j\omega R_1C_1)}$$

For the midband region where

$$\frac{1}{R_1C_1} < \omega < \frac{1}{R_2C_2}$$

the transfer function simplifies to

$$A_v \approx -\frac{R_2}{R_1}$$

Since the filter stage is designed to have unity gain,

$$R_2 = R_1$$

From the simulation, the lower cutoff frequency is approximately 9.5 Hz and the upper cutoff frequency is approximately 38.4 kHz, corresponding to the -3 dB points.

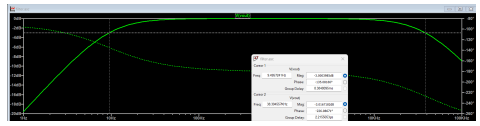

Fig. 13: 0dB Gain of Filter

B. Plots

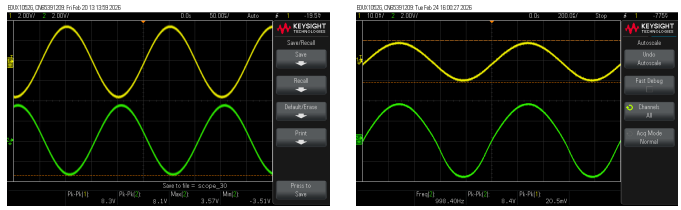

(a) Output of Filter Stage alone (b) Output in full circuit

Fig. 14: Pre-amplifier output in hardware

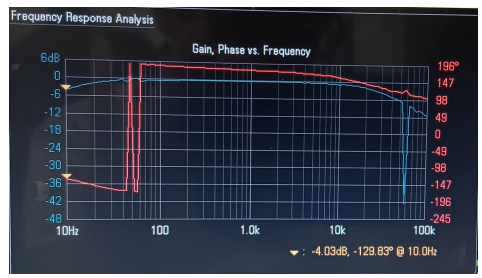

Fig. 15: Bodeplot showing 0dB gain (Hardware)

VI. Power Amplifier

A. Class AB Configuration and Biasing

A Class AB power amplifier is used in the final stage to provide sufficient current after the filter stage to drive the speaker load. AB configuration is chosen is because it combines the advantages of both class A and B configurations.

Class A has low distortion but high power dissipation since the transistor is conducting throughout. Class B amplifiers on the other hand, save power since they conduct only during the positive half of the cycle, but result in crossover distortion during the period when both the transistors are off. To solve these, class AB amplifier removes this distortion by slightly biasing both transistors so that they conduct for a little more than half of the cycle.

Power transistors TIP31C and TIP32C are used for more tolerance. To ensure that the bases of the transistors are biased such that remain slightly forward biased, diodes are used since they have a voltage drop of about 0.7 V when they are forward biased.
By placing diodes in the biasing path, a nearly constant voltage difference is established between the bases of the two

transistors. As a result, the transition between the positive and negative halves of the signal is smooth, which eliminates crossover distortion in the output.

B. Unity Gain

Considering the small signal emitter resistance r_e and load resistance R_L, $A_v = \frac{R_L}{R_L + r_e}$
Since $R_L \gg r_e$, $A_v \approx 1$.

C. Parameter Values

The two biasing resistors ensure that the transistors are slightly forward biased, which helps prevent crossover distortion in the output stage. The capacitors act as AC coupling capacitors that block any DC offsets while allowing the AC signal to pass to the next stage. The values are chosen based on the high-pass cutoff frequency given by $f_c = \frac{1}{2\pi RC}$ where R is the effective input resistance seen by the capacitor and C is the coupling capacitor value.

Initially, the resistor values were chosen as $1\,k\Omega$. However, this caused loading on the power supply during the hardware implementation. This occurred because the resistors form a current path between the supply rails through the diode biasing network. With such low resistance values, a relatively large current flows through this path, resulting in excessive current draw from the power supply. When the resistor values were increased to $4.7\,k\Omega$, the bias current decreased, preventing the power supply from overloading while still maintaining the required biasing conditions. This was the final resistance value used in the hardware circuit.

The selected capacitor value of $0.2\,\mu F$ ensures that the audio signal passes through the stage without significant attenuation while maintaining stable DC biasing of the circuit. Equal values were used for the resistors and capacitors in both branches to maintain symmetrical biasing and ensure equal amplification during the positive and negative half cycles of the signal.

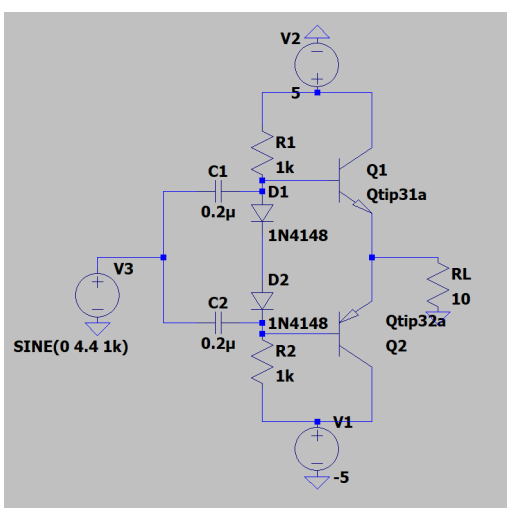

Fig. 16: Power Amp Circuit

D. Power Output Calculation

The output power delivered to the load can be calculated using

$$P = \frac{V_{\text{rms}}^2}{R_{\text{load}}} = \frac{V_{\text{peak}}^2}{2R_{\text{load}}}$$

Substituting the values:

$$V_{\text{rms}} = 4.5\,\text{V}, \quad R_{\text{load}} = 10\,\Omega$$

$$P = \frac{4.5^2}{20}$$

$$P = 1.012\,\text{W}$$

Therefore, the output power delivered to the $10\,\Omega$ load is approximately $1.012\,\text{W}$.

E. Waveform Verification

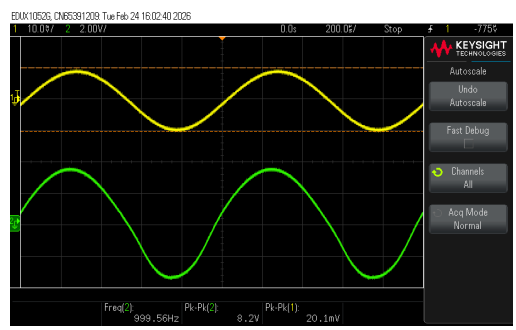

Fig. 17: PowerAmp output in full circuit.

VII. Overall Performance

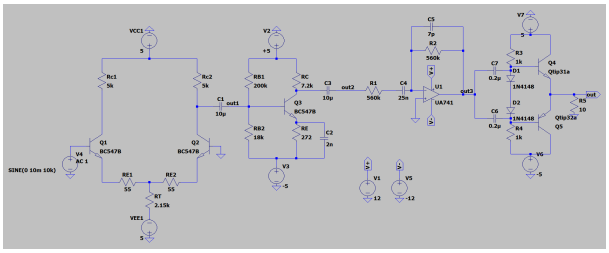

Fig. 18: Final Circuit (Simulation)

A. Overall Gain

1) Tran: From the Simulation, we obtained a Gain of 430.5.

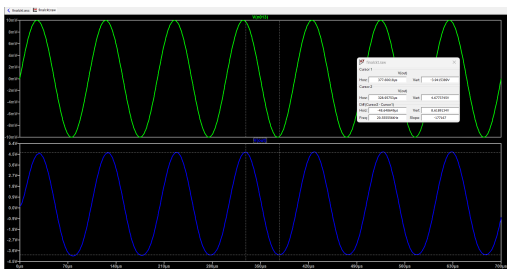

Fig. 19: Final Circuit Gain (Simulation)

Finally, we obtained a Gain of 410 in our hardware circuit.

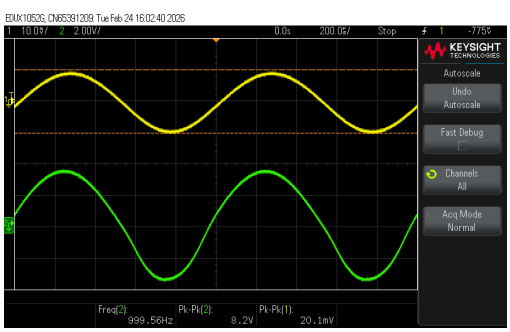

Fig. 20: Final Circuit Gain (Hardware)

2) AC analysis: Fig 21 and Fig 22 show the final bode plot obtained in Simulation and Hardware respectively.

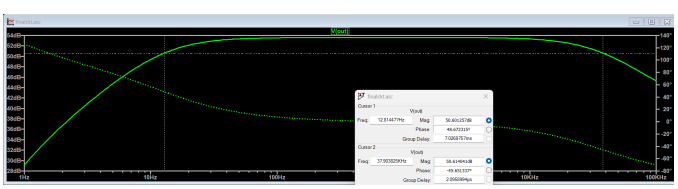

Fig. 21: Final Bodeplot

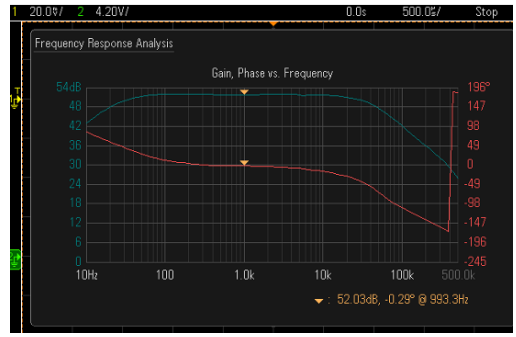

Fig. 22: Final Circuit Bode Plot

B. Total Harmonic Distortion

$$THD = \frac{\sqrt{\sum_{n=2}^{\infty} V_{n,\mathrm{RMS}}^2}}{V_{f,\mathrm{RMS}}}$$

Harmonic Number	Frequency [Hz]	Fourier Component	Normalized Component	Phase [degree]
1	1.000e+4	4.200e+0	1.000e+0	98.81°
2	2.000e+4	1.978e-1	4.709e-2	-154.36°
3	3.000e+4	2.229e-2	5.306e-3	150.29°
4	4.000e+4	1.230e-2	2.927e-3	96.44°
5	5.000e+4	5.489e-3	1.307e-3	-24.86°
6	6.000e+4	5.726e-3	1.363e-3	-116.45°
7	7.000e+4	1.112e-2	2.646e-3	121.71°
8	8.000e+4	5.397e-3	1.285e-3	117.74°
9	9.000e+4	2.768e-3	6.591e-4	-90.83°

Partial Harmonic Distortion: 4.761560%
Total Harmonic Distortion: 4.769590%

Fig. 23: THD

C. Slew Rate

The slew rate of the amplifier is calculated from the slope of the output waveform:

$$SR = \left|\frac{\Delta V}{\Delta t}\right|$$

From the LTspice cursor measurements,

$$\Delta V = -1.898536\ \mathrm{V}, \quad \Delta t = 3.4735023\,\mu s$$

$$SR = \left|\frac{-1.898536}{3.4735023}\right|$$

$$SR \approx 0.546\,\mathrm{V}/\mu s$$

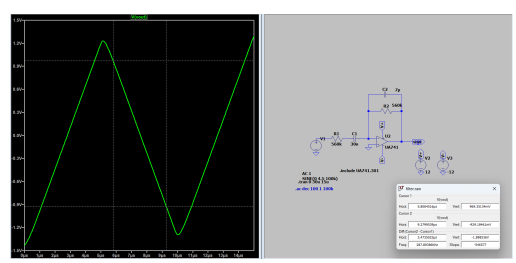

Fig. 24: Slew Rate

REFERENCES

[1] ”RF Electronics”, by Behzad Razavi

[2] ”Microelectronic Circuits”, by Kenneth Smith, Adel Sedra

[3] ”Differential Amplifier - The Voltage Subtractor,” Electronics Tutorials.[Online].

[4] ”Common Emitter Amplifier and Bipolar Transistor CE Amplifiers,”Electronics Tutorials. [Online].

[5] “Band Pass Filter and Bandstop Filter Explained,” YouTube, uploaded by All About Electronics, Sep. 3, 2017. [Online].

[6] ”Transistor Amplifiers - Class A, AB, B, C Circuits,” The Organic Chemistry Tutor. [Online].