K.T.H.M. COLLEGE, NASHIK

Class: S.Y.B.C.A., Sem-II

Subject: ELS-291-MN: Communication Networks (2024 Pattern)

Unit-III Notes: Wireless Communication Protocols

Introduction: Wireless communication protocols are standardized sets of rules that allow devices to communicate with each other without physical connections. These protocols define how data is transmitted, received, encoded, and decoded over wireless channels such as radio waves, infrared, or microwaves.

In modern technology, wireless communication plays a vital role in enabling connectivity between devices like smartphones, computers, sensors, and embedded systems. These protocols ensure reliable, secure, and efficient data exchange in applications ranging from personal area networks to large-scale industrial systems.

Wireless protocols operate at different layers of the communication model and vary based on factors such as range, data rate, power consumption, and application requirements. For example, some protocols are designed for short-range communication with low power consumption, while others support long-range communication with high data rates.

Common examples of wireless communication protocols include:

- Wi-Fi – Used for high-speed internet access
- Bluetooth – Suitable for short-range device communication
- Zigbee – Used in IoT and low-power applications
- LoRaWAN – Ideal for long-range, low-power communication
- NFC (Near Field Communication) – Used for contactless transactions

These protocols are widely used in fields such as telecommunications, healthcare, automation, smart homes, and industrial control systems.

Short range ir technology freq band range and application

Wireless communication protocols are sets of rules governing data transmission between devices without physical cables, utilizing radio, infrared, or microwave signals. Key protocols include **Wi-Fi** (IEEE 802.11, high-speed networking), **Bluetooth** (short-range, low-power), **Zigbee** (IoT, low-power, mesh), **NFC** (ultra-short-range), and cellular standards like **4G/5G**.

Short-range Infrared (IR) technology operates by transmitting data or signals using light invisible to the human eye, generally within the electromagnetic spectrum range just

below red light. It is ideal for short-distance, line-of-sight communication, typically up to 10–30 meters.

Frequency Band and Wavelength Range

- **Wavelength Range:** The infrared spectrum spans from approximately **700 nanometers (nm) to 1 millimeter (mm)**.
- **Frequency Range:** This corresponds to frequencies between approximately **430 THz and 300 GHz**.
- **Common Wavelengths:** Most consumer IR devices use near-infrared LEDs operating at wavelengths around **940 nm to 950 nm**.
- **Carrier Frequency:** To avoid interference from ambient light sources (sunlight, bulbs), IR data is modulated, typically at a carrier frequency of **38 kHz** (or ranges from 36 kHz to 46 kHz).

Key Applications

- **Remote Controls:** TV, audio systems, and air conditioner remotes.
- **Short-Range Data Transfer (IrDA):** Formerly common in laptops, PDAs, and mobile phones for file transfers.
- **Peripherals:** Wireless mice, keyboards, and printers.
- **Sensors and Automation:** Intrusion detectors, motion sensors, and security systems.
- **Industrial/Medical:** IR Spectroscopy for material analysis, and medical sensors.

Application Notes and Technical Details

- **Line of Sight (LoS):** Requires a clear, straight-line path between the transmitter and receiver.
- **Non-Penetration:** IR signals cannot penetrate walls, making them ideal for high-security, local-room, or single-device control, but poor for bridging rooms.
- **Data Rates:** Standard IR (IrDA 1.0) supports up to 115 kbit/s, while Fast IR (IrDA 1.1) supports up to 4 Mbps.
- **Modulation:** Common modulation techniques include Pulse Position Modulation (PPM). The receiver (e.g., TSOP series) includes an internal filter to remove noise from background light.

- **Advantages:** Low cost, no licensing required, low power consumption, and no electromagnetic interference (EMI) with other devices.
- **Limitations:** Environmental sensitivity (blocked by sun, smoke, dust, fog) and the need for, generally, a 15-degree angle range for effective communication.

What is Bluetooth?

Bluetooth is a short-range wireless communication technology that allows electronic devices to exchange data over radio waves without physical cables, mainly for simple, low-power, and personal connectivity.

- Used to connect nearby devices such as phones, laptops, and accessories
- Designed to replace short cables with wireless links
- Operates in the 2.4 GHz Industrial, Scientific, and Medical (ISM) frequency band

Bluetooth – Important Points:

- **Bluetooth** is a short-range wireless communication technology used to exchange data between devices without cables.
- It operates in the **2.4 GHz ISM (Industrial, Scientific, and Medical) band**.
- Developed by the Bluetooth Special Interest Group (Bluetooth SIG).
- It uses **radio waves** for communication between devices.
- Typical range:
  - **10 meters (Class 2 devices)** – most common (phones, earbuds)
  - Up to **100 meters (Class 1 devices)** – industrial use
- Supports **low power consumption**, making it suitable for battery-operated devices.
- Uses a technique called **Frequency Hopping Spread Spectrum (FHSS)** to reduce interference.
- Enables creation of small networks called **piconets** (one master device + multiple slave devices).
- Data transfer speed:
  - Basic Bluetooth: up to ~1 Mbps
  - Bluetooth 5+: higher speed and longer range

Bluetooth Versions and Types

Bluetooth exists in two main versions:

1. Bluetooth Classic (BR/EDR)

Bluetooth Classic (BR/EDR) is the original version of Bluetooth designed for continuous, high-reliability data and audio transmission between devices over short distances.

- Supports steady data and audio streaming between devices
- Higher power consumption compared to BLE
- Commonly used in headphones, speakers, keyboards, and computers
- Provides moderate data rates for reliable connections

2. Bluetooth Low Energy (BLE)

Bluetooth Low Energy (BLE) is a power-efficient version of Bluetooth optimized for devices that transmit small amounts of data intermittently, extending battery life.

- Ideal for low-power, battery-operated devices like wearables and sensors
- Supports intermittent or periodic data transfer
- Widely used in IoT, smart home, and health monitoring devices
- Maintains connectivity with minimal energy consumption

Architecture of Bluetooth

The architecture of Bluetooth defines how devices are organized and communicate within a network. It supports two main types of network structures:

1. Piconet

A piconet is the basic Bluetooth network where one device acts as a **master** controlling communication, while up to seven active devices act as slaves.

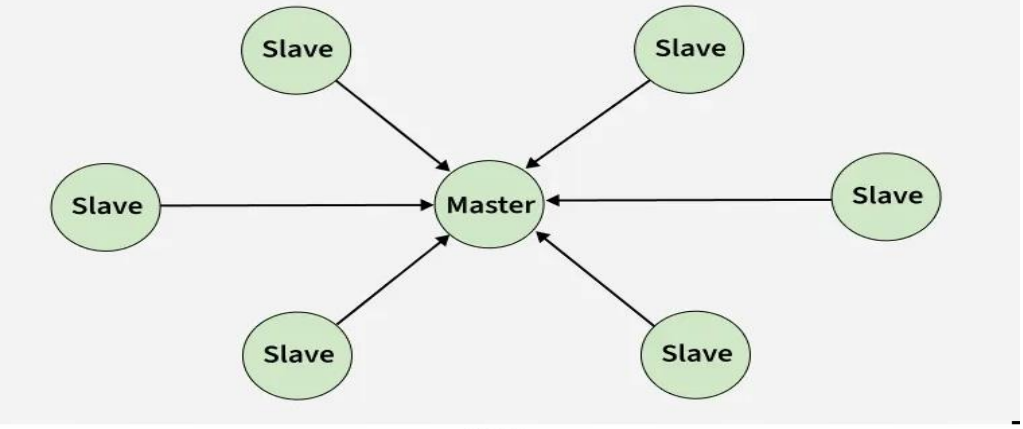

Piconet

- The master device coordinates data transmission and timing
- Slaves communicate only when allowed by the master
- Uses frequency-hopping to avoid interference
- Supports ad-hoc network formation for nearby devices

2. Scatternet

A scatternet is formed when multiple piconets are connected through devices that participate in more than one piconet, allowing a larger network to function seamlessly.

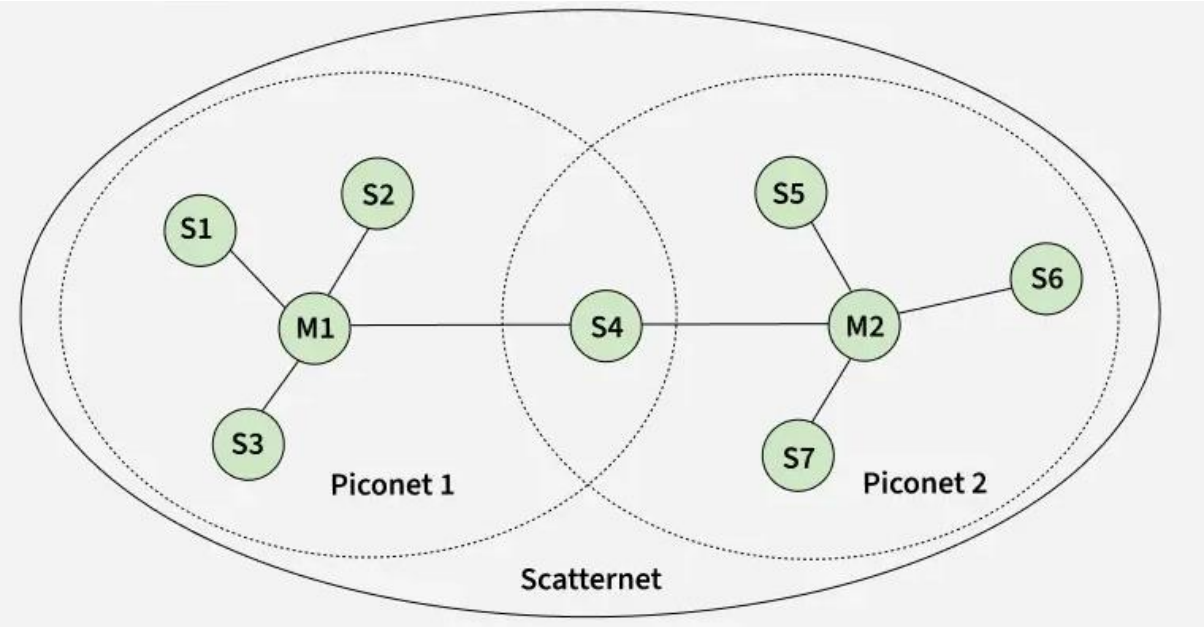

- Extends network coverage beyond a single piconet
- Devices can act as master in one piconet and slave in another
- Enables communication across multiple groups of devices
- Useful in environments where many Bluetooth devices coexist

Common Types of Bluetooth Devices

- **In-Car Headset:** Allows users to make and receive phone calls through the car's speaker system without directly using a mobile phone, enabling hands-free communication.
- **Stereo Headset:** Used to listen to music wirelessly from smartphones, cars, or home audio systems, providing cable-free audio streaming.
- **Webcam:** A Bluetooth-enabled webcam can be connected wirelessly to a laptop or smartphone for video calls and conferencing.
- **Bluetooth-Enabled Printer:** Enables wireless printing by connecting a printer to a mobile phone or laptop through Bluetooth, without requiring cables or a network connection.
- **Bluetooth Global Positioning System (GPS):** Allows a smartphone to connect with a car's navigation system via Bluetooth to provide GPS directions and location-based services.

Applications of Bluetooth: Bluetooth is widely used for short-range wireless communication across various personal, commercial, and industrial applications due to its low power consumption and ease of use.

- Used in wireless headsets, speakers, keyboards, and other peripherals for cable-free connectivity.
- Enables Wireless Personal Area Networks (WPANs) for connecting nearby devices; in limited cases, it can support small local networks.
- Allows wireless connectivity between digital cameras and mobile phones for instant photo transfer.
- Supports data transfer such as videos, music, photographs, and documents between smartphones, computers, and other Bluetooth-enabled devices.
- Widely used in medical healthcare for patient monitoring devices and wearable sensors.
- Applied in sports and fitness devices such as smartwatches, fitness trackers, and heart-rate monitors.
- Used in military and defense systems for secure short-range communication and equipment interconnection.

Advantages

- Bluetooth is a low-cost and easy-to-use wireless communication technology.

- It supports wireless connectivity without cables, enabling quick ad-hoc connections between devices.
- Bluetooth signals can penetrate walls and obstacles to a limited extent.
- It supports both voice and data transmission, making it suitable for audio devices and file sharing.
- Bluetooth consumes low power, especially with Bluetooth Low Energy (BLE).
- Widely supported across smartphones, laptops, and IoT devices.

Disadvantages

- Bluetooth can be vulnerable to security threats if proper pairing and encryption are not used.
- It offers lower data transfer speeds compared to Wi-Fi (Bluetooth Classic supports up to ~3 Mbps).
- Bluetooth has a limited communication range compared to other wireless technologies.
- Performance may degrade due to interference in the 2.4 GHz ISM band.
- Traditional Bluetooth piconet communication does not support routing, though Bluetooth Mesh enables multi-hop routing in modern implementations.

Introduction of ZigBee:

ZigBee is an open, global wireless communication standard designed for low-power, low-data-rate, and short-range applications such as home automation, sensing, and control. It is based on the IEEE 802.15.4 (LR-WPAN) standard, which defines the Physical (PHY) and Medium Access Control (MAC) layers. The Zigbee Alliance, on the other hand, specifies the higher protocol layers to enable secure, reliable, and cost-effective wireless communication.

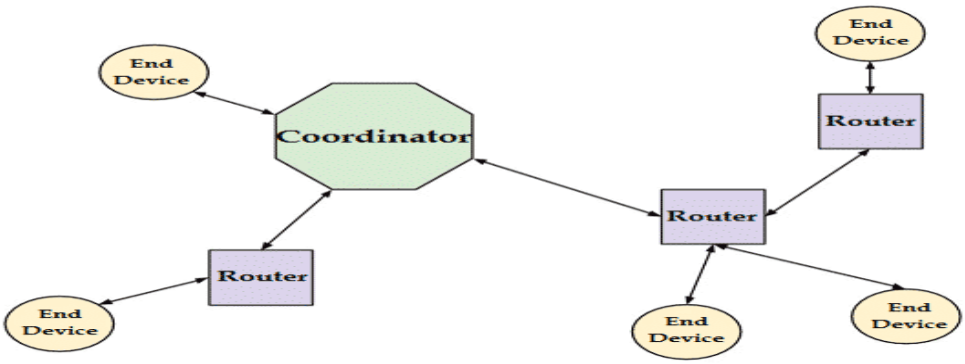

Fig: Zigbee

Zigbee Standard: Characteristics and Features

1. Zigbee is designed to operate on very low power, allowing battery-powered devices to function for long periods without frequent recharging or replacement.
2. The standard supports data rates ranging from 20 kbps to 250 kbps, which is sufficient for transmitting sensor readings, control commands, and other small amounts of data.
3. Zigbee devices typically communicate over distances of 75 to 100 meters, although the actual range can vary depending on environmental obstacles and interference.
4. Devices can join an existing Zigbee network quickly, usually within approximately 30 milliseconds, enabling fast deployment and dynamic networking.
5. Zigbee networks can theoretically include up to 65,000 devices, but in practical implementations, the number of connected devices is usually around 240 due to routing and memory limitations.
6. Being an open standard, Zigbee allows for low-cost hardware and software implementation, making it ideal for widespread use in Internet of Things (IoT) applications.
7. Devices in a Zigbee network spend most of their time in sleep mode and only transmit data when necessary, significantly reducing energy consumption.
8. Zigbee operates in three frequency bands: 868 MHz in Europe with 1 channel, 915 MHz in the US and Australia with 10 channels, and 2.4 GHz worldwide with 16 channels, although each network uses only a single channel at a time.
9. Zigbee uses stochastic addressing, where each device is assigned a random address and announced, and mechanisms exist to resolve any address conflicts.
10. Each node maintains the quality of its links to neighboring nodes through link management, and the link quality is used as the link cost in routing.
11. Frequency agility allows nodes to report interference to the channel manager, which can then select a different channel to maintain reliable communication.
12. Zigbee supports asymmetric links, meaning each node may have different transmit power and sensitivity, which can result in communication paths being asymmetric.
13. Power management ensures that routers and coordinators use main power, while end devices rely on batteries, optimizing energy consumption across the network.

Why Another Short-Range Communication Standard?

- Existing wireless technologies like Wi-Fi and Bluetooth are optimized for high data rates, resulting in higher power consumption.

- Many applications, such as sensor networks, home automation, and industrial monitoring require very low data rates but long battery life.
- Devices in control and sensing systems often transmit small, infrequent data packets, making high-bandwidth standards inefficient.
- ZigBee was introduced to provide a low-cost, low-power, and reliable solution for short-range wireless communication.
- It supports scalable networks and mesh topology, which improves coverage and reliability compared to traditional short-range standards.

Types of ZigBee Devices:

ZigBee Coordinator

- It is the central and most important device in a ZigBee network.
- It starts and forms the network and allows other devices to join.
- It assigns network addresses to devices and manages overall communication.
- It maintains network security, including authentication and key management.
- Only one coordinator is present in each ZigBee network.

ZigBee Router

- It forwards data packets between devices in the network.
- It helps extend the network range by acting as an intermediate node.
- It supports mesh networking by providing multiple communication paths.
- Routers usually remain powered on and do not enter sleep mode.
- Multiple routers can exist in a ZigBee network.

ZigBee End Device

- It communicates only with its parent device (coordinator or router).
- It does not route or forward data for other devices.
- It is typically battery-powered and designed for low energy consumption.
- End devices can enter sleep mode to conserve power.
- Examples include sensors, switches, and control units.

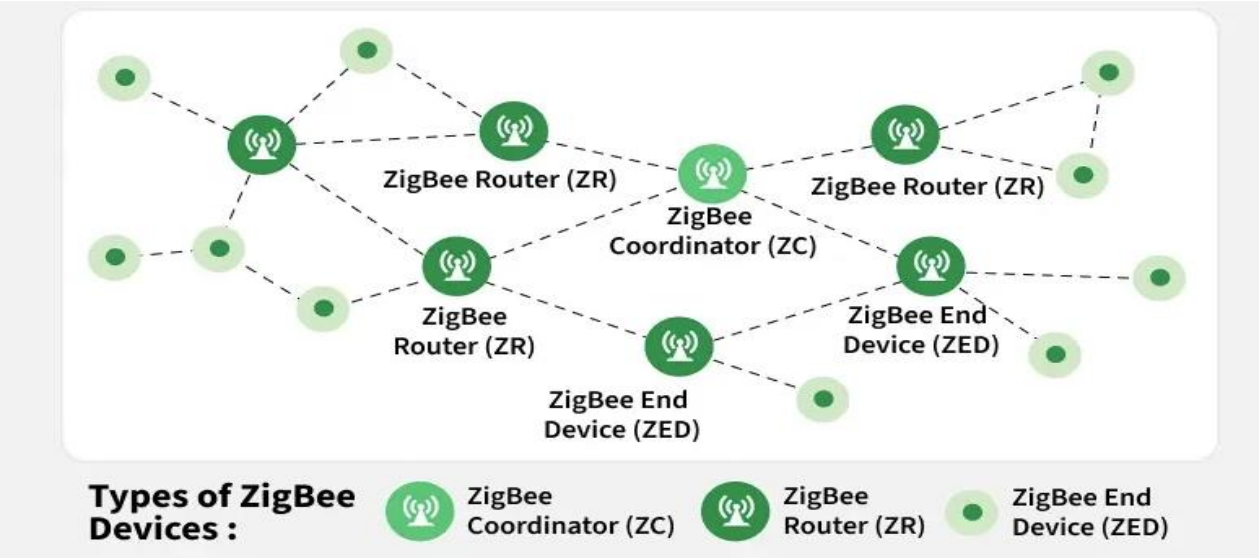

Zigbee Network Topologies

Zigbee supports multiple network topologies to provide flexible communication between devices, ensuring reliable data transfer and extended network coverage depending on the application.

1. **Star Topology** – The network consists of a single coordinator and several end devices, where all end devices communicate only with the coordinator. This topology is commonly used in Zigbee Smart Energy applications.
2. **Mesh Topology** – The network includes one coordinator, multiple routers, and end devices. It is self-healing, meaning that if one device fails, data can be rerouted through other devices to maintain network connectivity.
3. **Tree Topology** – The network has a central coordinator, multiple routers, and end devices. The routers extend the network coverage, allowing devices farther from the coordinator to communicate through the routers.

Advantages:

- Zigbee is designed for low power consumption, allowing battery-powered devices to operate for long periods without frequent recharging.
- The protocol provides network security and application support services, operating on top of the IEEE 802.15.4 standard.
- Zigbee enables fully connected networks in homes, where all devices can communicate with each other seamlessly.
- It is widely used in smart home applications due to its ability to connect and control multiple devices efficiently.
- Implementation of Zigbee networks is relatively easy, making it suitable for both developers and end-users.
- Zigbee offers adequate security features to protect network data from unauthorized access.
- Zigbee chips and modules are relatively inexpensive, making it a cost-effective solution for IoT applications.
- The protocol uses a **mesh networking topology**, allowing devices to communicate with each other without relying on a central hub or router.
- Zigbee is highly reliable, with mechanisms in place to ensure data delivery even under adverse conditions.

Disadvantages:

- Zigbee has a relatively short range compared to other wireless communication protocols, which can limit its use in large buildings or outdoor environments.
- The protocol is designed for low-data-rate applications, making it unsuitable for scenarios that require high-speed data transfer.

- Zigbee is not as widely adopted as other IoT protocols, which can create interoperability challenges when connecting devices from different manufacturers.
- While Zigbee includes security features, they are not as robust as those in some other IoT protocols, making it more vulnerable to potential hacking or security threats.

Applications: Zigbee is widely used in applications that require low-power, reliable, and short-range wireless communication. Its versatility makes it suitable for home, industrial, medical, and commercial applications.

- **Home Automation** – Zigbee enables smart home devices such as lights, thermostats, and security systems to communicate and be controlled remotely.
- **Medical Data Collection** – Zigbee is used in healthcare to collect and transmit patient data from medical devices, enabling remote monitoring and efficient healthcare management.
- **Industrial Control Systems** – Zigbee facilitates wireless control and monitoring of machinery, sensors, and other industrial equipment for improved efficiency and safety.
- **Meter Reading Systems** – Utility meters, such as electricity, gas, and water meters, use Zigbee to automatically transmit usage data to central systems.
- **Light Control Systems** – Zigbee allows wireless control of lighting in homes, offices, and commercial spaces, improving energy efficiency and convenience.
- **Commercial Applications** – Zigbee is used in retail, logistics, and building management for automation, monitoring, and communication between devices.
- **Government Markets Worldwide** – Various government applications, such as smart city projects and public safety monitoring, utilize Zigbee for reliable wireless communication.
- **Home Networking** – Zigbee enables communication between different household devices, creating a connected network for better device coordination and automation.

Z-Wave Protocol: Z-Wave it is a wireless communication protocol used by automatic or automotive appliances for the purpose of connection and communication. It is invented in 1999 by Zensys a Danish-American company.

Z-Wave Protocol Stack :

Z-Wave protocol stack contains five layers physical layer, MAC layer, transport layer, network layer, and application layer.

- **PHY layer:** This layer has many functions but the important one is modulation and coding. In this layer, data is transferred in 8-bit blocks and the most significant bit is sent first.
- **MAC layer:** MAC layer as the name suggests takes care of medium access control among slave nodes based on collision avoidance and backoff algorithms. also, it takes care of network operations based on Home ID, Node ID, and other parameters in the z-wave frame.
- **Transport layer:** Z-Wave transport layer is mainly responsible for retransmission, packet acknowledgement, and packet origin authentication. the z-wave layer consists of four basic frame types:
    - Single cast frame
    - ACK frame
    - Multicast frame
    - Broadcast frame
- **Network layer:** Z-Wave network layer controls the frame routing from one node to another node.
- **Application layer:** This layer is responsible for decoding and execution of commands in the z-wave network.

The following diagram shows us various layers of the z-wave protocol stack:

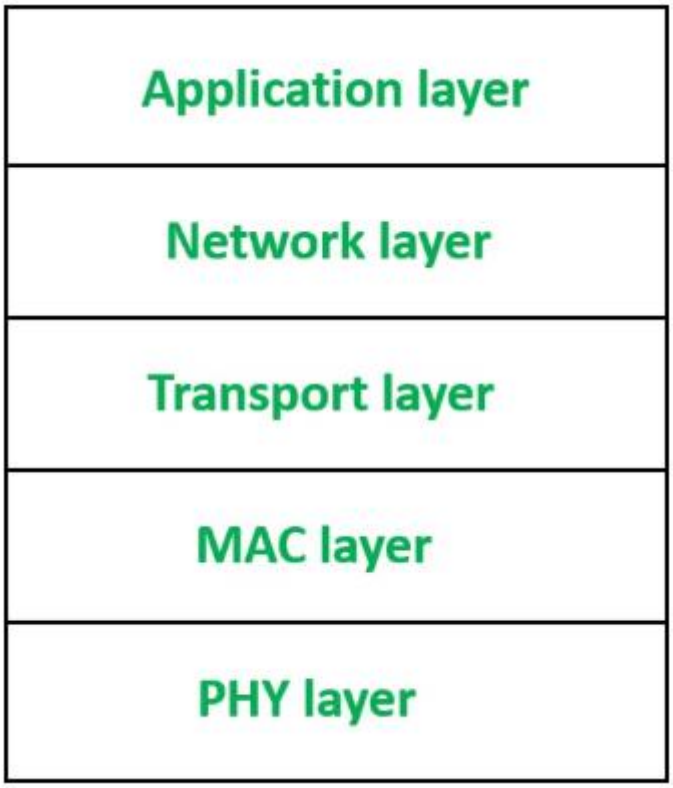

Z-Wave Components: The components of z-wave include controllers, slave nodes, Home ID, Node ID, and routing tables.

- **Controllers:** A controller is a unit that has the ability to compile a routing table of the network and can calculate routes to the different nodes. There are two types of controllers -
    - Primary controller: Primary controller is the device that contains a description of the z-wave network and controls the output. It assigns network ID or Home ID or Node ID to the z-wave during the enrollment process.
    - Secondary controller: It also has a Network ID and it remains constant to maintain routing tables.
- **Slave nodes:** Slave nodes are the nodes that do not contain routing tables but may contain a network map. slave nodes have the ability to receive frames and respond to them if necessary.
- **Home ID:** The ID used by z-Wave for the separation of the network from each other is called Home ID. It is created by the primary controller and is 32-bit in size.
- **Node ID:** The identification number or an address that is given to every device during the process of inclusion is called Node ID.
- **Routing table:** It is used by controllers for calculating routes.

The following diagram shows us z-wave network.

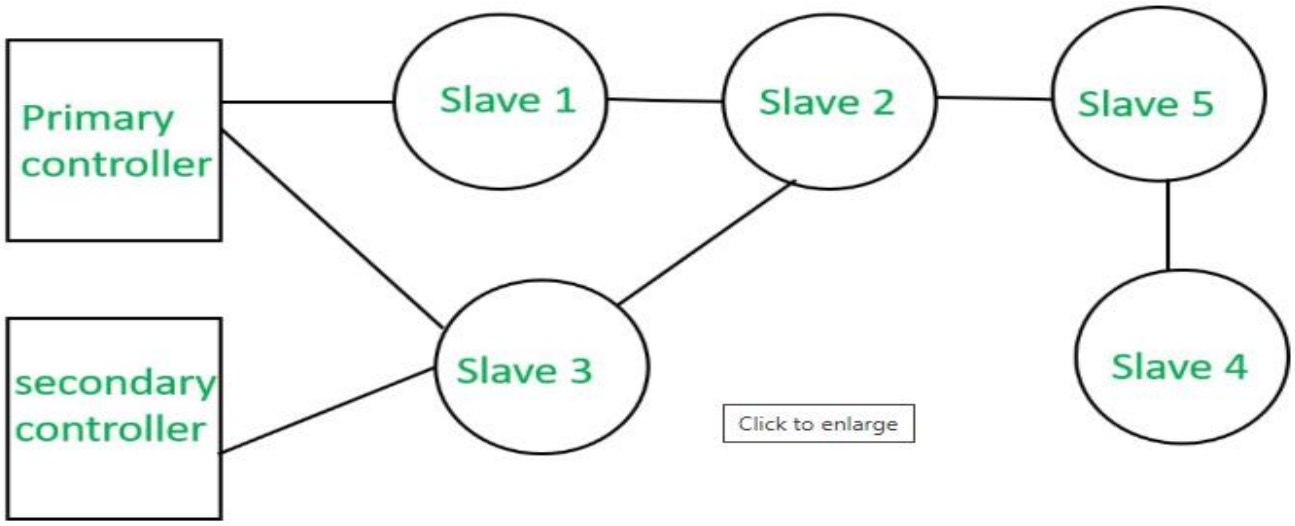

Characteristics of Z-Wave:

- Uses RF for signaling and control
- Frequency: 900 MHz (ISM)
- Range: 30 meter
- Data rates: upto 100 kbps
- FSK Modulation

Applications of Z-Wave:

- Home automation
- Water management using flood sensors
- Fingerprint scanner

Radio Frequency Identification (RFID): is a form of wireless communication that incorporates the use of electromagnetic or electrostatic coupling in the radio frequency portion of the electromagnetic spectrum to uniquely identify an object or person. It uses radio frequency to search, identify, track, and communicate with items and people.

RFID (Radio Frequency Identification) is a technology that uses electromagnetic fields to automatically identify and track tags attached to objects. These tags contain electronically stored information that can be read from several meters away, without requiring direct line-of-sight. RFID is commonly used in inventory management, asset tracking, access control, and supply chain logistics due to its efficiency and accuracy in tracking and managing items.

It is a method that is used to track or identify an object by radio transmission over the web. Data is digitally encoded in an RFID tag which might be read by the reader. This device works as a tag or label during which data is read from tags that are stored in the database through the reader as compared to traditional barcodes and QR codes. It is often read outside the road of sight either passive or active RFID.

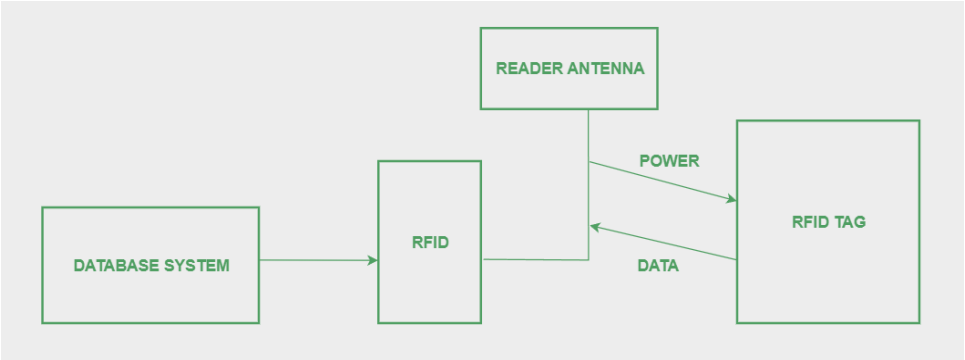

Working Principle of RFID

Generally, RFID uses radio waves to perform AIDC function. AIDC stands for Automatic Identification and Data Capture technology which performs object identification and collection and mapping of the data. An antenna is an device which converts power into radio waves which are used for communication between reader and tag. RFID readers retrieve the information from RFID tag which detects the tag and reads or writes the data into the tag. It may include one processor, package, storage and transmitter and receiver unit.

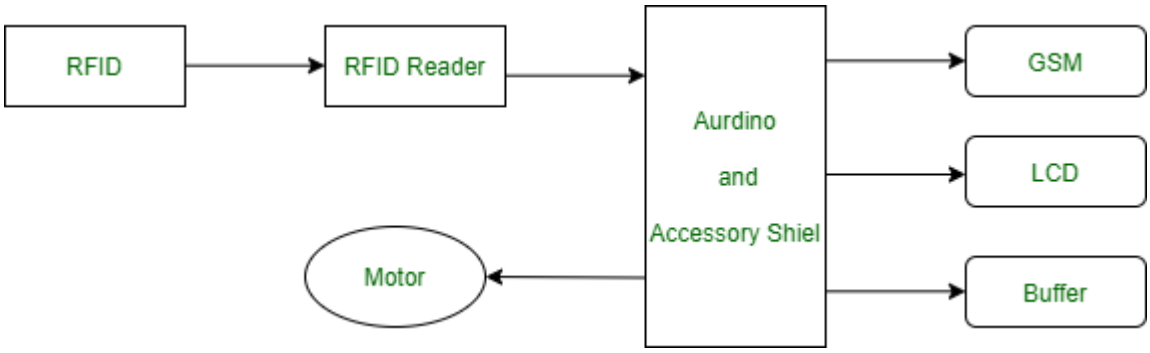

Working of RFID System:

Every RFID system consists of three components: a scanning antenna, a transceiver and a transponder. When the scanning antenna and transceiver are combined, they are referred to as an RFID reader or interrogator. There are two types of RFID readers- fixed readers and mobile readers. The RFID reader is a network-connected device that can be portable or permanently attached. It uses radio waves to transmit signals that activate the tag. Once activated, the tag sends a wave back to the antenna, where it is translated into data.

The transponder is in the RFID tag itself. The read range for RFID tags varies based on factors including the type of tag, type of reader, RFID frequency and interference in the surrounding environment or from other RFID tags and readers. Tags that have a stronger power source also have a longer read range.

Types of RFID

There are many kinds of RFID, each with different properties, but perhaps the most fascinating aspect of RFID technology is that most RFID tags have neither an electric plug nor a battery. Instead, all of the energy needed to operate them is supplied in the form of radio waves by RFID readers. This technology is called passive RFID to

distinguish it from the(less common) active RFID in which there is a power source on the tag.

- **Passive RFID:** Passive RFID tags does not have their own power source. It uses power from the reader. In this device, RF tags are not attached by a power supply and passive RF tag stored their power. When it is emitted from active antennas and the RF tag are used specific frequency like 125-134KHZ as low frequency, 13.56MHZ as a high frequency and 856MHZ to 960MHZ as ultra-high frequency.
    - No need embedded power
    - Tracking inventory
    - Has unique identification number
    - Sensitive for interference
    - Semi-passive RFID

- **Active RFID:** In this device, RF tags are attached by a power supply that emits a signal and there is an antenna which receives the data. means, active tag uses a power source like battery. It has it's own power source, does not require power from source/reader.
    - Embedded power: communication over large distance
    - Has unique identifier /identification number
    - Use other devices like sensors
    - Better than passive tags in the presence of metal

Frequency Bands: RFID systems operate in different frequency bands, each with its characteristics:

- **Low Frequency (LF, 125-134 kHz)**: Used for short-range applications (up to 10 cm). Common in animal tracking and access control.
- **High Frequency (HF, 13.56 MHz)**: Medium range (up to 1 meter) and commonly used in smart cards, ticketing, and library systems.
- **Ultra-High Frequency (UHF, 860-960 MHz):** Longer range (up to 12 meters) and used in inventory management, supply chain, and logistics.
- **Microwave Frequency (2.45 GHz):** Used for very specific applications with ranges similar to UHF but with higher data transfer rates.

Challenges of RFID:

- **Cost**: Higher initial setup and tag costs compared to traditional barcodes.
- **Interference**: Susceptible to interference from metal, liquids, and other RFID systems.
- **Privacy**: Concerns about unauthorized tracking and data breaches.
- **Standardization**: Different frequency standards and protocols can lead to compatibility issues.

Application of RFID: RFID technology is versatile and can be applied in numerous fields:

- **Inventory Management**: RFID helps in tracking inventory in real-time, reducing errors, and increasing efficiency.
- **Asset Tracking**: Companies can monitor their assets' location and status, preventing loss and optimizing utilization.
- **Supply Chain Management**: Enhances visibility and accuracy in tracking products throughout the supply chain.
- **Access Control**: Used in security systems for granting or restricting access to buildings, rooms, or devices.
- **Retail**: Enables efficient stock management, theft prevention, and improved customer experience through smart shelves and automated checkouts.
- **Healthcare**: Used for patient tracking, equipment management, and ensuring the authenticity of medications.

Global Positioning System: GPS is a satellite-based navigation system that allows ground users to provide their exact location, velocity, and time 24 hours a day in all weather conditions worldwide. GPS developed by the U.S. Department of Défense. It was designed to assist soldiers and military vehicles but it's available to anyone with a GPS receiver after some years. GPS is a common system that most of us use to reach from one location to another location.

The GPS systems combine a network of satellites that constantly send coded information in the form of radio signals. After that receiver receives the signals and interprets the transmitted information from the satellites to locate the position on earth accurately. This satellite system is congestive of 29 satellites situated at almost 20,000 kilometres above the Earth’s surface. The GPS satellites are located at 6 earth-centered

orbital planes and travel at a speed of 14,000 km/hr. The GPS was first time used in combat during the Gulf Wars.

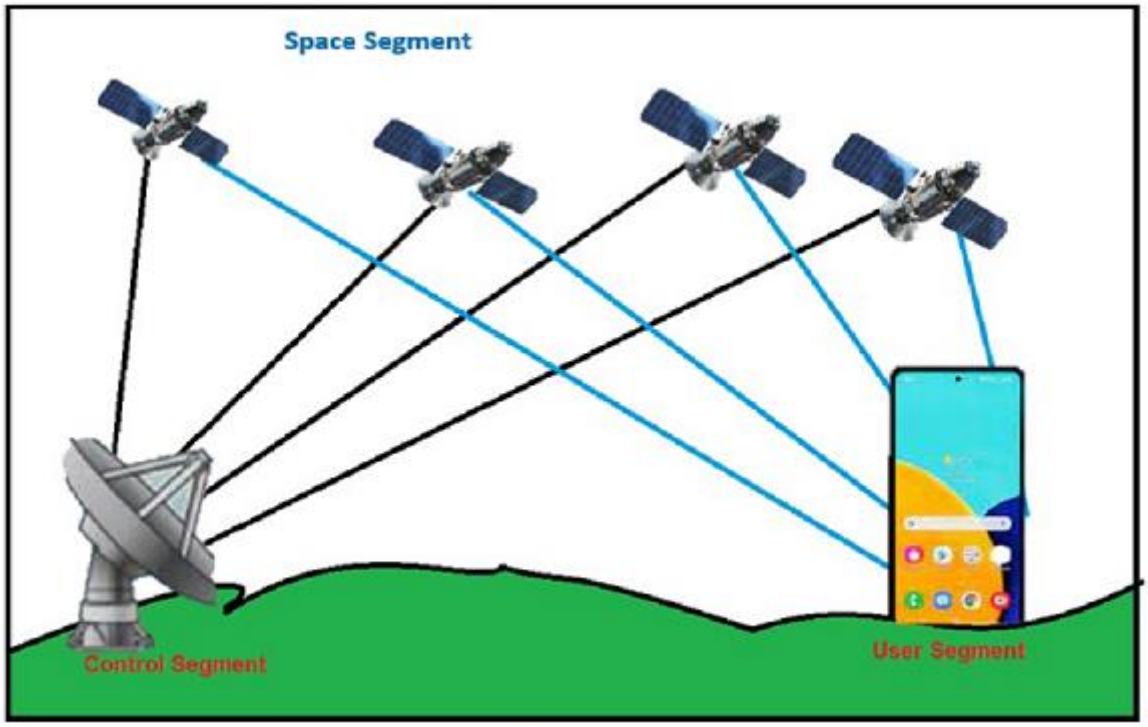

Fig: Global Positioning System (GPS)

Functionality of GPS

The GPS device will first establish a connection with 3 to 4 satellites. After that GPS satellite broadcasts a message including the location of the receiver. If the GPS receiver receives a Group of messages from different satellites to calculate the exact position using the process called **triangulation**.

GPS satellites need an unobstructed line of sight for the broadcast. Hence, this technology is not only for indoor but also for use in a wide area. There some devices use nearby cell towers and open-source Wi-Fi signals. The technology is called LPS (Local Positioning System) and is a substitute for GPS.

Architecture of GPS: GPS Architecture is divided into three segments.

1. **Space Segment:** The GPS satellites fly in circular orbits at an altitude of 20000 km and with a period of 12 hours. It's powered by Solar cells. The GPS satellite Continuously orients themselves to point their solar panels toward the sun and their antenna. Towards the earth. Orbital planes are centered on the Earth. Orbits are designed so that, at least, Six satellites are always within a line of sight from any location on the Planet. The GPS System consists of 24 satellites (at present 32) Established in near-circular orbits arranged in 6 orbitals Placed at 55 degrees Inclination to the Equator at 20200 km height and 26600 km orbital Radius. The

Period of Revolution is 12 Hours. So that at least 4 Satellites are available for observations at any time throughout the year anywhere in the World.

2. **Control Segment:** The second component of GPS is the Control segment. It's further divided into three sub-components.
    - **Master Control System**
    - **Monitor Station:** The monitor station checks the exact latitude, Position, Speed, and overall health of the orbiting satellites. The control segment ensures that the GPS and Clocks remain within acceptable limits. A station can track up to 11 satellites at a time. This “check-up” is performed twice a day, By each station.
    - **Ground Antennas**: The ground Antennas monitor and track the satellites from horizon to horizon. They also transmit correction information to individual satellites. Communication with the GPS satellites for command and control purposes.
3. **User Segment:** The Master Control Station is located at Falcon Air Force Base in Colorado Springs. Responsible for the overall management of remote monitoring and transmission sites. Check-up is performed twice a day, by each of the 6 stations as satellites Complete their Journey around the earth. Master Control can reposition satellites to maintain an optimal GPS Constellation. It also includes a display for showing location and speed information to the user. A receiver is often described by its number of channels (this signifies how many satellites it can monitor simultaneously). As of recently, receivers usually have between twelve and twenty channels. There are five stations for satellite signal Receivers:
    - Colorado (Main Station)
    - Hawaii
    - Ascension
    - Diego Garcia
    - Kwajalein
    - Cape Canaveral

GPS receiver consists of three components:

- An Antenna (tuned to the frequencies transmitted by the satellites).
- Receiver processor.
- Highly Stable Clock (Commonly a Crystal oscillator).

Applications of GPS: There are five most common uses of the GPS.

- **Location:** With the help of GPS we can find the exact position of the object.
- **Navigation:** We can navigate from one location to another with the help of GPS.GPS technology is also useful for Transportation Management.
- **Tracking**: With the help of GPS we can Monitor object movements like speed, distance, and position.
- **Mapping:** GPS also helps in creating maps of the World.
- **Timing**: GPS also provides the estimated time for reaching the destination measurement it depends on speed and object movement.

For Example, GPS technology is also useful for Monitoring Vehicles and Persons. Tracking is useful in the following services:

- Mass Tracking
- Ship Tracking
- Vehicle Tracking

GPS tracking is Mostly used by Police, Ambulance, Fire Department Services, and Mass delivery man. A GPS tracking device is a portable device. GPS device allows users to monitor and track the exact location of an object. These devices are most commonly used in Ambulance, and train airplane tracking systems. While tracking devices are used in-car navigation systems, then GPS navigation systems show the drivers their location on a digital map and also provide driving instructions and directions for a destination. Advanced feature GPS trackers use GPS technology to track a vehicle's current location and trip history. We can broadcast GPS data to a computer, smartphone, or tablet.

K.T.H.M. COLLEGE, NASHIK
Class: S.Y.B.C.A., Sem-II
Subject: ELS-291-MN: Communication Networks (2024 Pattern)
Unit-IV Notes: Wireless Networks

Introduction: A wireless network is a computer network that uses radio waves rather than physical cables to connect nodes, providing mobility and flexibility for devices. These networks allow users to connect, roam, and access data in homes, offices, and public spaces, typically using a centralized router for internet access.

Long Range Wireless Technology: Long-range wireless technology refers to communication systems that allow data transmission over large distances, ranging from several kilometers to even global coverage, without the need for physical connections. These technologies are widely used in applications where wide-area connectivity is required, such as remote monitoring, agriculture, smart cities, and telecommunications.

Key Features:

- Wide coverage area (kilometers to global range)
- Low power consumption (in many IoT technologies)
- Reliable communication over long distances
- Supports large-scale networks
- Can operate in licensed or unlicensed frequency bands

Types of Long-Range Wireless Technologies:

1. Cellular Networks
2. LoRaWAN
3. Sigfox
4. Satellite Communication
5. NB-IoT

Low power local area networking (LPLAN): Low Power Local Area Networking (LPLAN) refers to wireless communication technologies designed for **short-range communication with minimal power consumption**. These networks are mainly used in applications where devices operate on batteries and need to function for long periods without frequent charging or replacement.

LPLAN is an important part of modern systems such as the **Internet of Things (IoT)**, smart homes, wearable devices, and industrial automation. It enables communication between sensors, controllers, and smart devices within a limited area like a home, office, or campus.

Key Characteristics:

- **Low Power Consumption:** Devices can run for months or years on small batteries
- **Short Range:** Typically from a few meters up to 100 meters
- **Low Data Rate:** Suitable for small data transmission (sensor data)
- **Low Cost:** Affordable hardware and deployment
- **Simple Network Setup:** Easy to install and maintain
- **Scalability:** Can connect multiple devices in a network

Common LPLAN Technologies:

1. Bluetooth Low Energy (BLE)
2. Zigbee
3. Z-Wave
4. Wi-Fi HaLow (802.11ah)

Applications of LPLAN:

- Smart home systems (lighting, security)
- Healthcare monitoring devices
- Wearable technology
- Industrial IoT (IIoT)
- Environmental monitoring
- Smart agriculture

Advantages:

- Long battery life
- Low operational cost
- Easy deployment
- Suitable for IoT applications

Low Power Wide Area Networking (LPWAN) Technologies:

Introduction: Low Power Wide Area Networking (LPWAN) refers to wireless communication technologies designed to support **long-range communication with very low power consumption**. LPWAN is widely used in **Internet of Things (IoT)** applications where devices need to send small amounts of data over large distances while operating on batteries for years.

These networks are ideal for connecting sensors and devices spread across cities, farms, or industrial areas.

Key Features of LPWAN

- **Long Range:** Typically 2–15 km (urban/rural), even more in open areas
- **Low Power Consumption:** Battery life up to 5–10 years
- **Low Data Rate:** Suitable for small data packets
- **Wide Coverage:** Covers large geographical areas
- **Low Cost:** Affordable deployment and maintenance
- **High Scalability:** Can support thousands of devices

Types of LPWAN Technologies:

1. LoRaWAN
2. Sigfox
3. NB-IoT
4. LTE-M (Long Term Evolution for Machines)

Applications of LPWAN:

- Smart cities (parking, lighting, waste management)
- Smart agriculture (soil monitoring, irrigation)
- Industrial IoT (machine monitoring)
- Smart metering (water, gas, electricity)
- Asset and vehicle tracking
- Environmental monitoring

Advantages:

- Long battery life
- Wide-area coverage
- Low cost and maintenance
- Suitable for remote locations
- Supports massive IoT deployment

What is LoRaWAN?

LoRaWAN stands for Low Range Wide Area Network. It is a communication protocol designed to operate using very low power to generate information over very long distances. This protocol is extensively used to operate over the physical layer of the OSI model.

Components of LoRaWAN: The network consists of many devices or sensors that gather small packets of data. These devices transmit the data to radio gateways using LoRa technology. The gateways then forward the data to a network server that manages the communication between all components of the network. The data is then sent to an application server where it can be processed and presented to the user in a user?friendly way, such as through a dashboard.

Example of LoRaWAN: Consider a farmer who wants to monitor the soil moisture of his land from a remote place. So he sets a sensor with a battery in the land and using this sensor it sends the ongoing status about the land moisture to the farmer along with LoRa technology. The process followed by this technology is that it first sends the data to the gateway component and then the gateway forwards the data to the network server using the LoRaWAN protocol.

Sigfox: is a global 0G low-power, wide-area network (LPWAN) designed specifically for the Internet of Things (IoT). It enables cost-efficient, long-range communication for devices sending small amounts of data (up to 12 bytes per message), offering high energy efficiency and low-cost subscriptions. It is ideal for tracking, sensors, and meters.

Key Features of Sigfox Technology:

- **Low Power Consumption:** Devices can run for years on small batteries or use energy-harvesting technologies.

- **Simple Connectivity:** Operates without the need for SIM cards or complex setup, using a dedicated, ultra-narrowband radio channel.
- **Long Range:** Designed to connect devices over large distances, making it suitable for asset tracking and smart city applications.
- **Global 0G Network:** Operates in over 70 countries through local operators, providing widespread coverage.

What is NB?IoT?: NB-IoT stands for Narrowband Internet of Things. It is a LoRaWAN based wireless communication standard that was developed by 3GPP. It transmits the data that uses low power and low bandwidth which in turn increases the battery life and decreases the complexity and cost.

Modes of Operation of NB-IoT

There are commonly three modes of operation used for allocating the frequency range,

- **In band operation:** It uses the free frequency spectrum.
- **Guard band operation:** It provides a guard between the channels to avoid interference.
- **Stand alone operation:** It occupies the channels which are already occupied by GSM.

LTE-M (Cat-M): LTE-M (Long Term Evolution for Machines), also known as Category M (Cat-M1), is a cellular-based LPWAN technology designed for Internet of Things (IoT) applications. It is standardized by 3GPP and operates on existing LTE networks.

LTE-M is developed to provide low power consumption, wide coverage, mobility support, and higher data rates compared to other LPWAN technologies like NB-IoT.

Working Principle:

- LTE-M uses existing **4G LTE infrastructure**
- IoT devices communicate with **cellular base stations (eNodeB)**
- Data is transmitted through the telecom network to cloud servers
- Supports **Power Saving Mode (PSM)** and **eDRX (extended Discontinuous Reception)** to reduce power consumption

Comparison of LPWAN Technologies:

Feature	LoRaWAN (LoRa)	Sigfox	NB-IoT	LTE-M (Cat-M)
Type	Non-cellular	Non-cellular	Cellular	Cellular
Spectrum	Unlicensed (ISM band)	Unlicensed	Licensed	Licensed
Range	2–15 km	10–50 km	1–10 km	1–10 km
Data Rate	Low (0.3–50 kbps)	Very low (~100 bps)	Low (~250 kbps)	Medium (~1 Mbps)
Power Consumption	Very low	Very low	Low	Low–medium
Battery Life	5–10 years	10+ years	5–10 years	3–5 years
Latency	High	Very high	Medium	Low

Wireless Sensor Network (WSN), is an infrastructure-less wireless network that is deployed in a large number of wireless sensors in an ad-hoc manner that is used to monitor the system, physical, or environmental conditions.

Sensor nodes are used in WSN with the onboard processor that manages and monitors the environment in a particular area. They are connected to the Base Station which acts as a processing unit in the WSN System. The base Station in a WSN System is connected through the Internet to share data. WSN can be used for processing, analysis, storage, and mining of the data.

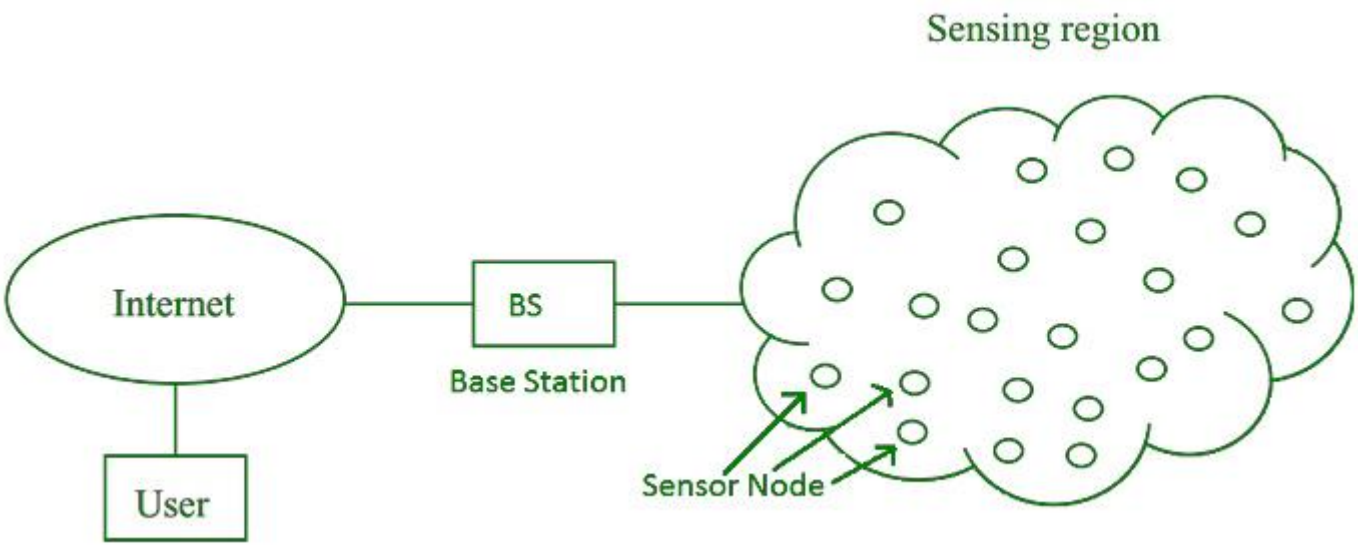

Wireless Sensor Network Architecture: A Wireless Sensor Network (WSN) architecture is structured into three main layers:

Physical Layer: This layer connects sensor nodes to the base station using technologies like radio waves, infrared, or Bluetooth. It ensures the physical communication between nodes and the base station.

Data Link Layer: Responsible for establishing a reliable connection between sensor nodes and the base station. It uses protocols such as IEEE 802.15.4 to manage data transmission and ensure efficient communication within the network.

Application Layer: Enables sensor nodes to communicate specific data to the base station. It uses protocols like ZigBee to define how data is formatted, transmitted, and received, supporting various applications such as environmental monitoring or industrial control.

These layers work together to facilitate the seamless operation and data flow within a Wireless Sensor Network, enabling efficient monitoring and data collection across diverse applications.

WSN Network Topologies: Wireless Sensor Networks (WSNs) can be organized into different network topologies based on their application and network type. Here are the most common types:

Bus Topology: In a Bus Topology, multiple nodes are connected to a single line or bus. Data travels along this bus from one node to the next. It's a simple layout often used in smaller networks.

Star Topology: Star Topology have a central node, called the master node, which connects directly to multiple other nodes. Data flows from the master node to the connected nodes. This topology is efficient for centralized control.

Tree Topology: Tree Topology arrange nodes in a hierarchical structure resembling a tree. Data is transmitted from one node to another along the branches of the tree structure. It's useful for expanding coverage in hierarchical deployments.

Mesh Topology: Mesh Topology feature nodes interconnected with one another, forming a mesh-like structure. Data can travel through multiple paths from one node to another until it reaches its destination. This topology offers robust coverage and redundancy.

Each topology has its advantages and is chosen based on factors such as coverage area, scalability, and reliability requirements for the specific WSN application.

Types of nodes (Coordinator, Router and End Device): Wireless Sensor Networks (WSNs) are commonly structured around three distinct types of nodes, especially in standards like ZigBee based on IEEE 802.15.4, which differ in their capabilities, power consumption, and roles within the network. These types are the Coordinator, Router, and End Device.

1. Coordinator (ZigBee Coordinator - ZC): The coordinator is the most crucial node in a WSN, acting as the root of the network tree or the central hub of a star topology.

1. Roles: Initiates the network, selects the radio channel and Personal Area Network (PAN) ID, and manages network security (trust center).
2. Power: Must be powered on constantly; it cannot go into sleep mode.
3. Functionality: Can store data and bridges the WSN to other networks (e.g., Internet).
4. Limit: There is only one coordinator per network.

2. Router (ZigBee Router - ZR): Routers act as intermediate nodes that relay data between end devices and the coordinator.

Roles: Extends the network's physical range, enables multi-hop communication, and finds optimal paths for data (routing).

Power: Generally mains-powered, as they must remain active to forward packets and cannot sleep.

Functionality: Full Function Device (FFD) that can collect sensor data while also routing data for others.

3. End Device (ZigBee End Device - ZED): End devices are the "leaf" nodes of the network, typically located at the edge of the network topology.

Roles: Primarily collect data (sensing) and transmit it to their parent (a router or coordinator).

Power: Low-power, often battery-operated. They can enter deep sleep modes to conserve energy.

Functionality: Reduced Function Device (RFD). They cannot route data for other nodes and only communicate with their parent.

Satellite communication: uses artificial satellites in Earth orbit to relay radio signals between terrestrial transmitters and receivers, acting as a space-based repeater. Key components include the space segment (satellite/transponder) and the earth segment (ground stations), facilitating long-distance broadcasting, telecommunication, and internet services.

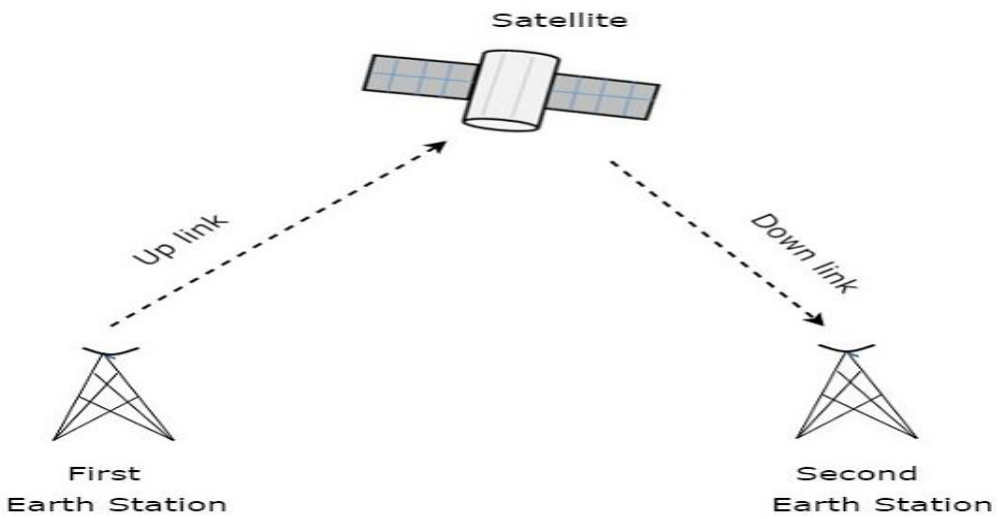

Basic Concept:

- **Uplink/Downlink:** Information travels from a ground station to the satellite (uplink), which processes and redirects it back to other ground locations (downlink).
- **Transponder:** The core unit on the satellite that receives, amplifies, and frequency-shifts the signal before retransmitting it.
- **Goal:** Provides global coverage, overcoming limitations of terrestrial systems.

Segments:

- **Space Segment:** Includes the satellites themselves and all subsystems (power, TT&C—Telemetry, Tracking & Command).
- **Earth Segment (Ground Segment):** Fixed or mobile Earth stations, including satellites dishes, antennas, and user terminals that send and receive data.

Orbits:

- **GEO (Geostationary Earth Orbit):** $\sim$35,900 km high, orbits over the equator. Appears stationary; used for TV broadcasting and weather.
- **LEO (Low Earth Orbit):** 160–1,600 km high. High speed, low latency, ideal for internet constellations.
- **MEO (Medium Earth Orbit):** 10,000–20,000 km high. Used for navigation satellites like GPS.
- **Polar Orbit:** Passes over poles, scanning the whole earth, used for mapping.

Applications:

- **Telecommunication:** Telephone signals and cellular backhaul.
- **Broadcasting:** DTH (Direct-to-Home) satellite television and radio.
- **Internet Connectivity:** Broadband internet in remote areas.
- **Navigation:** GPS and GNSS (Global Navigation Satellite Systems).
- **Military & Defense:** Secure communications and intelligence tracking.
- **Disaster Management:** Emergency communication when terrestrial networks are down.

Best Luck