Slip 1. To study Configuration of IP and MAC address. for practical use.

Q1 turn on the PC, find and note down the IPv4 Address, Subnet mask, default Gateway and Physical (MAC) address. Show it to examiner.

Steps:

1. Turn ON the PC
2. Press **Windows + R**
3. Type **cmd** → Press Enter
4. In Command Prompt, type:
5. ipconfig /all
6. Note down:
   - **IPv4 Address** → (e.g. 192.168.1.10)
   - **Subnet Mask** → (e.g. 255.255.255.0)
   - **Default Gateway** → (e.g. 192.168.1.1)
   - **Physical Address (MAC)** → (e.g. 00-1A-2B-3C-4D-5E)
   -

Q2 Write down the steps to configure new IP address on your PC.

1. Open Control Panel
2. Click Network and Internet
3. Click Network and Sharing Center
4. Click Change adapter settings
5. Right-click on Ethernet / Wi-Fi → Click Properties
6. Select Internet Protocol Version 4 (IPv4) → Click Properties
7. Select Use the following IP address
8. Enter:
9. IP Address
10. Subnet Mask
11. Default Gateway
12. Click OK → Close all windows

Q3 Configure your PC with new IPv4 address

(Example — you can write this or use given values)

- IP Address: 192.168.1.50
- Subnet Mask: 255.255.255.0
- Default Gateway: 192.168.1.1

Q4.Verify the configuration also check the connectivity and show it to examiner. Note down the observations.

Steps:

1. Open **Command Prompt**
2. Type: ipconfig
3. → Verify new IP is applied
4. Check connectivity using:
5. ping 192.168.1.1

Q5 What is difference between Logical address and physical address?

Basis	Logical Address (IP Address)	Physical Address (MAC Address)
Definition	Address used to identify a device on a network or internet	Unique hardware address used to identify a device on a local network
Purpose	Used for routing data between different networks	Used for delivering data within the same network (LAN)
Assignment	Assigned by network administrator / ISP	Assigned by manufacturer (burned into NIC)
Nature	Changeable (static or dynamic)	Permanent and fixed
OSI Layer	Works at Network Layer (Layer 3)	Works at Data Link Layer (Layer 2)
Format	Numeric (IPv4: 32-bit, IPv6: 128-bit)	Hexadecimal (48-bit address)
Example	192.168.1.1	00-1A-2B-3C-4D-5E
Scope	Used globally (across networks/internet)	Used locally (within LAN only)
Protocol Used	Used by IP (Internet Protocol)	Used by Ethernet / ARP
Change Frequency	Can change frequently (DHCP)	Rarely changes (unless hardware replaced)

Q6 State the use of ping command.
The ping command is a network utility used to test communication between two devices on a network.

Uses:

1. Check Connectivity
   - Verifies whether a device (host/server) is reachable or not.
2. Test Internet Connection
   - Helps to check if the internet is working properly.
3. Measure Response Time (Latency)
   - Shows how long it takes for data to travel (in milliseconds).
4. Detect Network Problems
   - Identifies issues like packet loss or network delay.
5. Verify IP Address Availability
   - Confirms whether a specific IP address is active on the network

Slip 2. To study Local Area Network setup.

Q1 State the minimum components required to setup simple LAN network. Also draw Simple LAN network using ..... PCs/laptops and switch using star topology and get it checked from examiner.

Minimum Components:

1. PCs / Laptops (2 or more)
2. Switch (central device)
3. Ethernet Cables (RJ-45)
4. Network Interface Card (NIC) (inbuilt in devices)
5. Power Supply

```
              PC1
               |
               |
PC2 ---- SWITCH ---- PC3
               |
               |
              PC4
```

Q2 Connect all devices to setup LAN network in star topology and power ON all devices. Show the LAN network to the examiner.

Steps:

1. Connect each PC to **Switch** using Ethernet cable
2. Ensure all connections go **only through switch (center)**
3. Power ON:
   - All PCs
   - SwitchCheck link lights (LEDs ON)

Q3 Assign static IPv4 address to each system. Confirm the IP configuration and verify the LAN setup using "ping" command.

Assign IP (Example):

Device	IP Address	Subnet Mask
PC1	192.168.1.1	255.255.255.0
PC2	192.168.1.2	255.255.255.0
PC3	192.168.1.3	255.255.255.0

Steps:

1. Go to **Network Settings → IPv4**
2. Select **Use manual IP**
3. Enter IP & subnet mask

Verification:

Open Command Prompt:
ping 192.168.1.2

Q4 Enable the file sharing option and share the file/folder. Verify the shared folder access from another computer.

Steps:

1. Go to **Control Panel → Network & Sharing Center**
2. Click **Advanced Sharing Settings**
3. Turn ON:
   - Network Discovery
   - File Sharing
4. Right-click folder → **Properties → Sharing → Share**
5. Select **Everyone → Share**

Q5 State the different network topologies used in LAN setup.

1. **Star Topology**
2. **Bus Topology**
3. **Ring Topology**
4. **Mesh Topology**
5. **Tree Topology**
6. **Hybrid Topology**

Q6 Which topology is mostly used in computer networks.
Star Topology

Reason:

- Easy to install
- Easy to troubleshoot
- Failure of one device does not affect others
- Widely used with switches (including in Cisco networks)

Slip 3.To convert the given IP addresses from dotted-decimal notion to binary notation.

Q1 Draw the IPv4 header format.

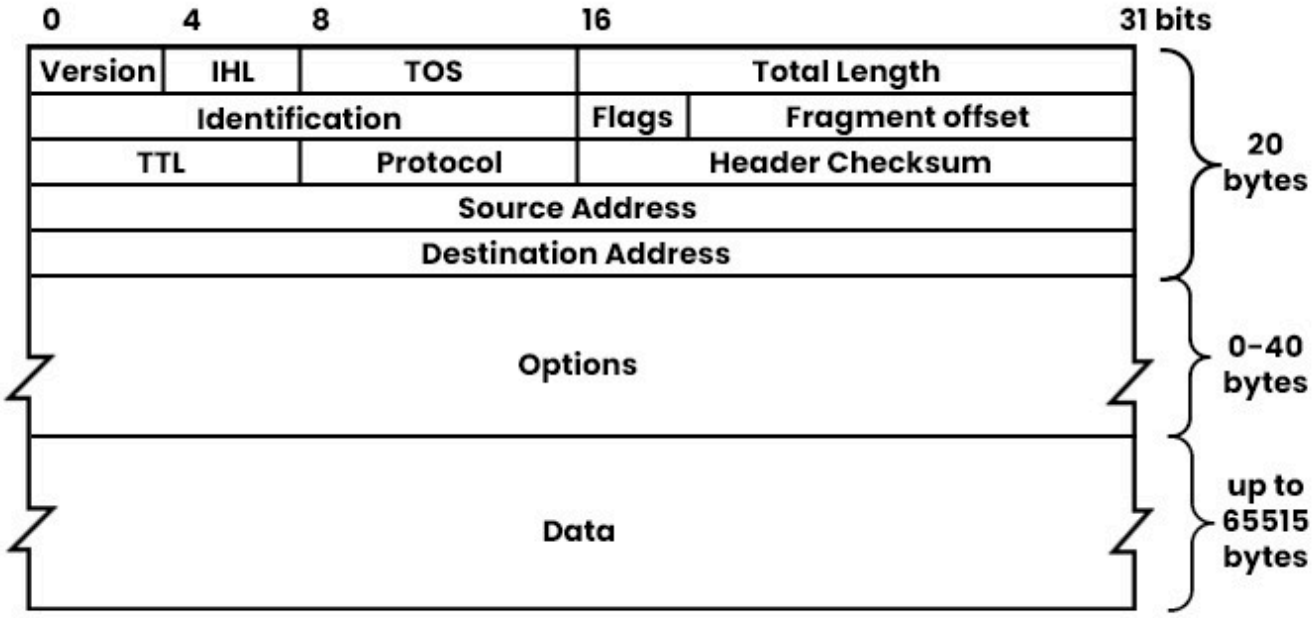

Q2 Turn on the PC, find and note down the IPv4 Address, Subnet mask, default Gateway and Physical (MAC) address. Show it to examiner.

Steps:

1. Press Windows + R → Type cmd
2. Type:
3. ipconfig /all
4. Note:
    - IPv4 Address
    - Subnet Mask
    - Default Gateway
    - Physical Address (MAC)

Q3 Convert the IPv4 address of your PC in to binary notation.

Example: 192.168.1.1

Decimal	Binary
192	11000000
168	10101000
1	00000001
1	00000001

Binary Form:
11000000.10101000.00000001.00000001

Q4 Convert the given (and provided by examiner) IPv4 address in to binary notation, also identify the wrong IPv4 address if any: a) 148.162.1.12,b) 258.2.1.22, c) 127.256.0.1, d)12.11.22.2 e)

Address	Binary / Status
a) 148.162.1.12	**10010100.10100010.00000001.00001100 Valid**
b) 258.2.1.22	**Invalid (258 > 255)**
c) 127.256.0.1	**Invalid (256 > 255)**
d) 12.11.22.2	**00001100.00001011.00010110.00000010 Valid**
e)	**Depends on given IP**

Q5 What is the range of value for each octet in an IPv4 address?
Each octet ranges from:
0 to 255
Because each octet = 8 bits (2^8 = 256 values)

Q6 Write the total address space of IPv4 address.
232=4,294,967,2962^{32} = 4,294,967,296232=4,294,967,296
Total IPv4 addresses = 4,294,967,296 (≈ 4.3 billion)

Slip 4.To convert the given IP addresses from dotted-decimal notion to binary notation.

Q1 Draw the IPv4 header format.

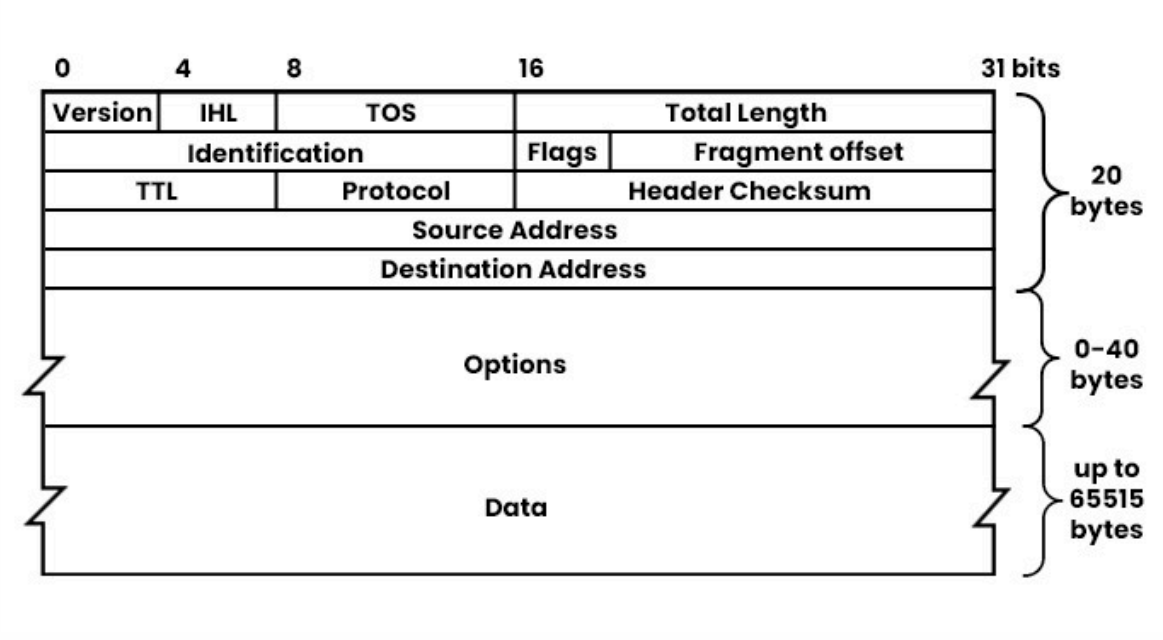

Q2 Turn on the PC, find and note down the IPv4 Address, Subnet mask, default Gateway and Physical (MAC) address. Show it to examiner.

Steps:

1. Press **Windows + R** → Type cmd
2. Type:
3. ipconfig /all
4. Note:
   - **IPv4 Address**
   - **Subnet Mask**
   - **Default Gateway**
   - **Physical Address (MAC)**

Q3 Change the given (and provided by examiner) IPv4 address in to dotted decimal notation. a) 11000000.10101000.00000001.00001010, b) 01111111.00000000.00000000.00000000 c) ……, ……, ……

a) 11000000.10101000.00000001.00001010

Binary	Decimal
11000000	192
10101000	168
00000001	1
00001010	10

Binary	Decimal
01111111	127
00000000	0
00000000	0
00000000	0

Answer: 192.168.1.10

b) 01111111.00000000.00000000.00000000

Q4 Find and comment on the error if any in following IP address: a) 111.56.045.78, b) 11100010.23.14.55, c) 221.34.7.45.8, d) 45.75.301.14

Address	Error
a) 111.56.045.78	Leading zero not allowed (045)
b) 11100010.23.14.55	First octet is binary, not decimal
c) 221.34.7.45.8	5 octets (should be 4)
d) 45.75.301.14	301 > 255 (invalid range)

Q5 How many bits are there in an IPv4 address?
IPv4 address = 32 bits

Q6 Write the total address space of IPv4 address.
232=4,294,967,2962^{32} = 4,294,967,296232=4,294,967,296

Slip 5. To find NetID and Host ID of the given IP addresses

Q1 Draw the IPv4 address format in terms of Net-ID and Host-ID.

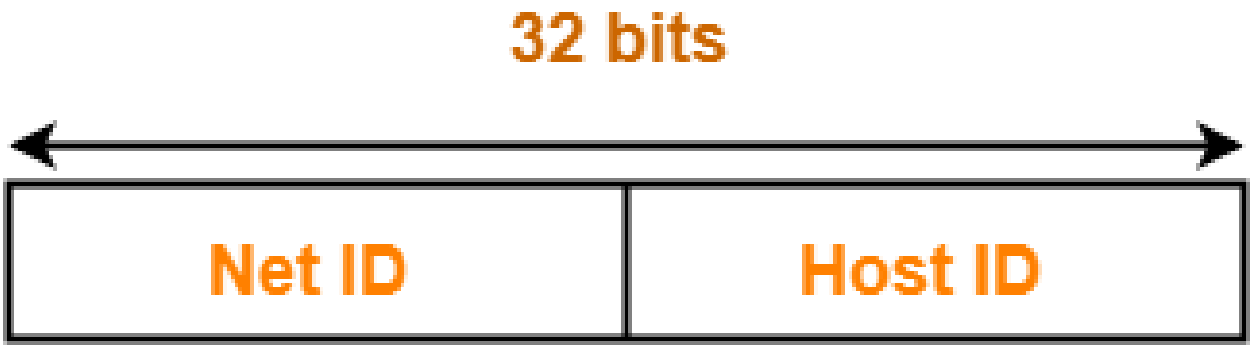

Format of an IP Address

Q2 Turn on the PC, find and note down the IPv4 Address, Subnet mask, default Gateway and Physical (MAC) address. Show it to examiner.

Steps:

1. Press **Windows + R → cmd**
2. Type:
3. ipconfig /all
4. Note:
   - IPv4 Address
   - Subnet Mask
   - Default Gateway
   - Physical Address (MAC)

Q3 Identify the Net-ID and Host-ID of the same.

Part	Value
Net-ID	**192.168.1**
Host-ID	**10**

Q4 Which address is in the class, find the Net-ID and Host-ID.

Net-ID (Network ID):

- Portion of IP address that identifies the **network**.

Host-ID:

- Portion of IP address that identifies the **specific device** in that network.

Q5 Define Net-ID and Host-ID.

Net-ID (Network ID):

- Portion of IP address that identifies the **network**.

Host-ID:

- Portion of IP address that identifies the **specific device** in that network.

Q6 How many usable host are there in a /28 network?

- Total bits = 32
- Host bits = 32 - 28 = 4

24−2=142^4 - 2 = 1424−2=14

Usable hosts = 14

Slip 6. To find class of the given IP addresses.

Q1 Draw the network connecting at least 4 PC with any classes of IP address. (Mention the IP address)

```
      PC1 (192.168.1.1)
          |
      PC2 (192.168.1.2)
          |
       [ SWITCH ]
        /     \
 PC3 (192.168.1.3)  PC4 (192.168.1.4)
```

Q2 Turn on the PC, find and note down the IPv4 Address, Subnet mask, default Gateway and Physical (MAC) address. Show it to examiner.

Steps:

1. Press **Windows + R → cmd**
2. Type:
3. ipconfig /all
4. Note:
   - IPv4 Address
   - Subnet Mask
   - Default Gateway
   - Physical Address (MAC)

Q3 Find the class of your PC's IP address.

Range	Class
1 – 126	**Class A**
128 – 191	**Class B**
192 – 223	**Class C**

Q4 What are the start and end address for different class of IP address? Find the class of following IP address: a. 10.5.25.7, b. 192.168.1.100 c. 203.5.113.25

Class Range Table

Class	Start Address	End Address
A	1.0.0.0	126.255.255.255
B	128.0.0.0	191.255.255.255
C	192.0.0.0	223.255.255.255

Given IPs:

IP Address	Class
a) 10.5.25.7	Class A
b) 192.168.1.100	Class C
c) 203.5.113.25	Class C

Q5 Which bits determine the class of an IP address?

Class	First Bits
A	0
B	10
C	110

Q6 What is default subnet mask of class A, B and C?

Class	Default Subnet Mask
A	255.0.0.0
B	255.255.0.0
C	255.255.255.0

Slip 7. To study Arduino based LED pattern generation.

Q1 Draw the circuit / block diagram of LED pattern generation using Arduino and get it checked from the examiner.

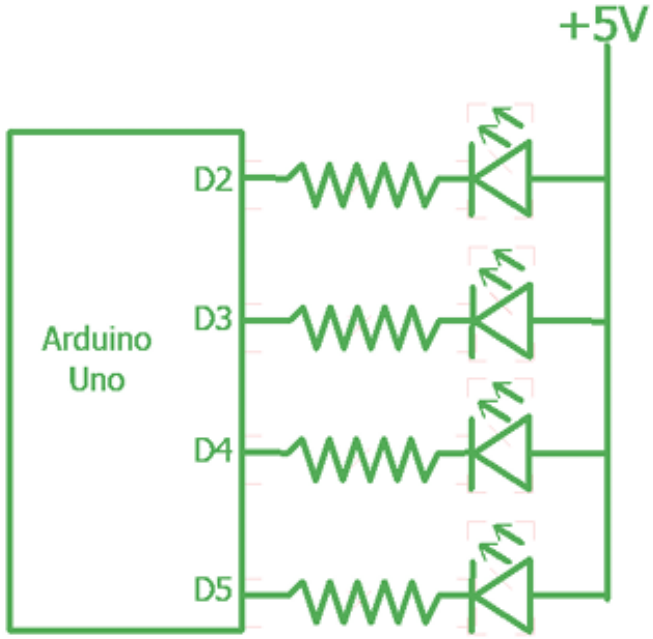

Q2 Write algorithm/ flowchart for same.

1. Start
2. Initialize pins 2, 3, 4, 5 as OUTPUT
3. Start loop
4. Turn OFF all LEDs
5. Wait 1 second
6. Turn ON all LEDs
7. Wait 1 second
8. Repeat continuously
9. End

Q3 Write program and get it checked from the examiner.(Same as Labbook)

```
void setup()
{
pinMode(2, OUTPUT);
pinMode(3, OUTPUT);
pinMode(4, OUTPUT);
pinMode(5, OUTPUT);
}
void loop()
{
digitalWrite(2, LOW);
digitalWrite(3, LOW);
digitalWrite(4, LOW);
digitalWrite(5, LOW);
delay(1000);
digitalWrite(2, HIGH);
digitalWrite(3, HIGH);
digitalWrite(4, HIGH);
digitalWrite(5, HIGH);
delay(1000);
}
```

Q4 Execute the program using Arduino IDE. Show the output to the examiner.

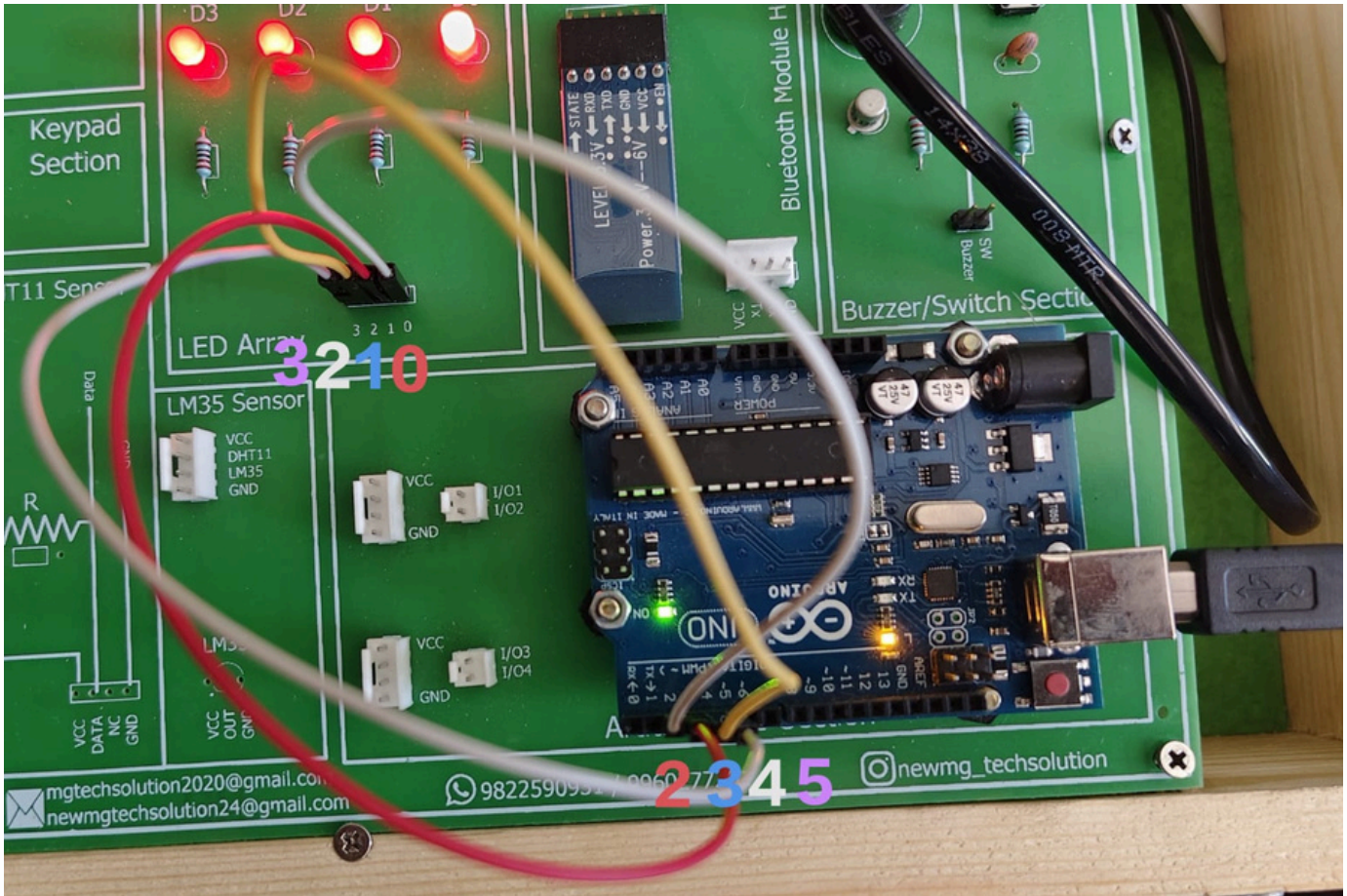

Q5 Modify the program for different LED pattern generation.

Customize code in loop function

E.g:-
```
void loop()
{
digitalWrite(2, LOW);
digitalWrite(3, HIGH);
digitalWrite(4, LOW);
digitalWrite(5, HIGH);
delay(1000);
digitalWrite(2, HIGH);
digitalWrite(3, LOW);
digitalWrite(4, HIGH);
digitalWrite(5, LOW);
delay(1000);
}
```

Q6 What is the function of pinMode() in Arduino.

The pinMode() function in Arduino is used to set the mode of a pin. It tells the Arduino whether a pin will act as an INPUT (to read data) or OUTPUT (to send data).

Slip 8. To study of Bluetooth.

Q1 Draw the circuit / block diagram to interface Bluetooth module with Arduino and get it checked from examiner.

Circuit Diagram:

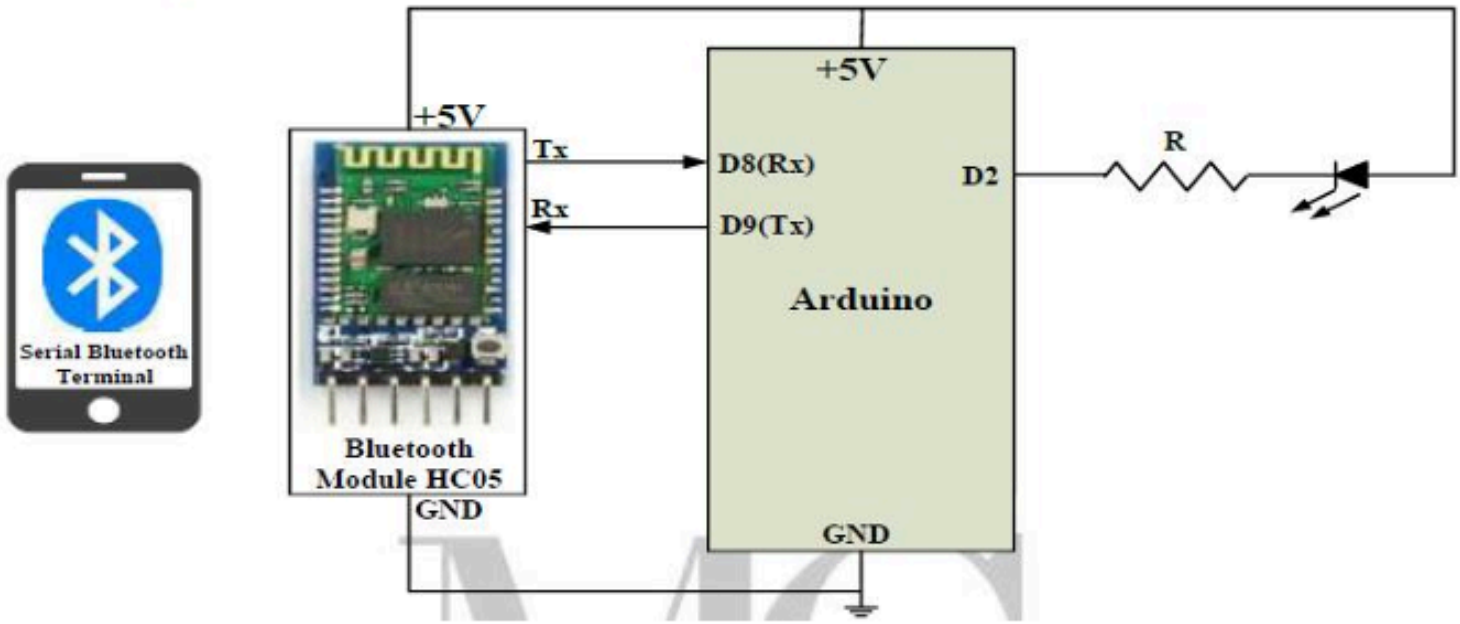

Q2 Write algorithm/ flowchart for same.

1. Start
2. Set LED pin i.e pin 2 as OUTPUT
3. Start serial communication using SoftwareSerial library
4. Set baud rate to 9600
5. Read data from serial
6. If data = '1', turn OFF LED
7. If data = '2', turn ON LED
8. End

Q3 Write program to control LED using Bluetooth and get it checked from the examiner. (Same as Labbook)

```
#include <SoftwareSerial.h>
SoftwareSerial mySerial(8, 9);
char inputByte;
int led = 2;
void setup()
{
mySerial.begin(9600);
pinMode(led, OUTPUT);
}
void loop()
{
while(mySerial.available()>0)
{
inputByte= mySerial.read();
if (inputByte == '1')
{
digitalWrite(led, LOW);
}
else if (inputByte == '2')
{
digitalWrite(led, HIGH);
}
}
}
```

Q4 Execute the program using Arduino IDE. Show the output to the examiner.

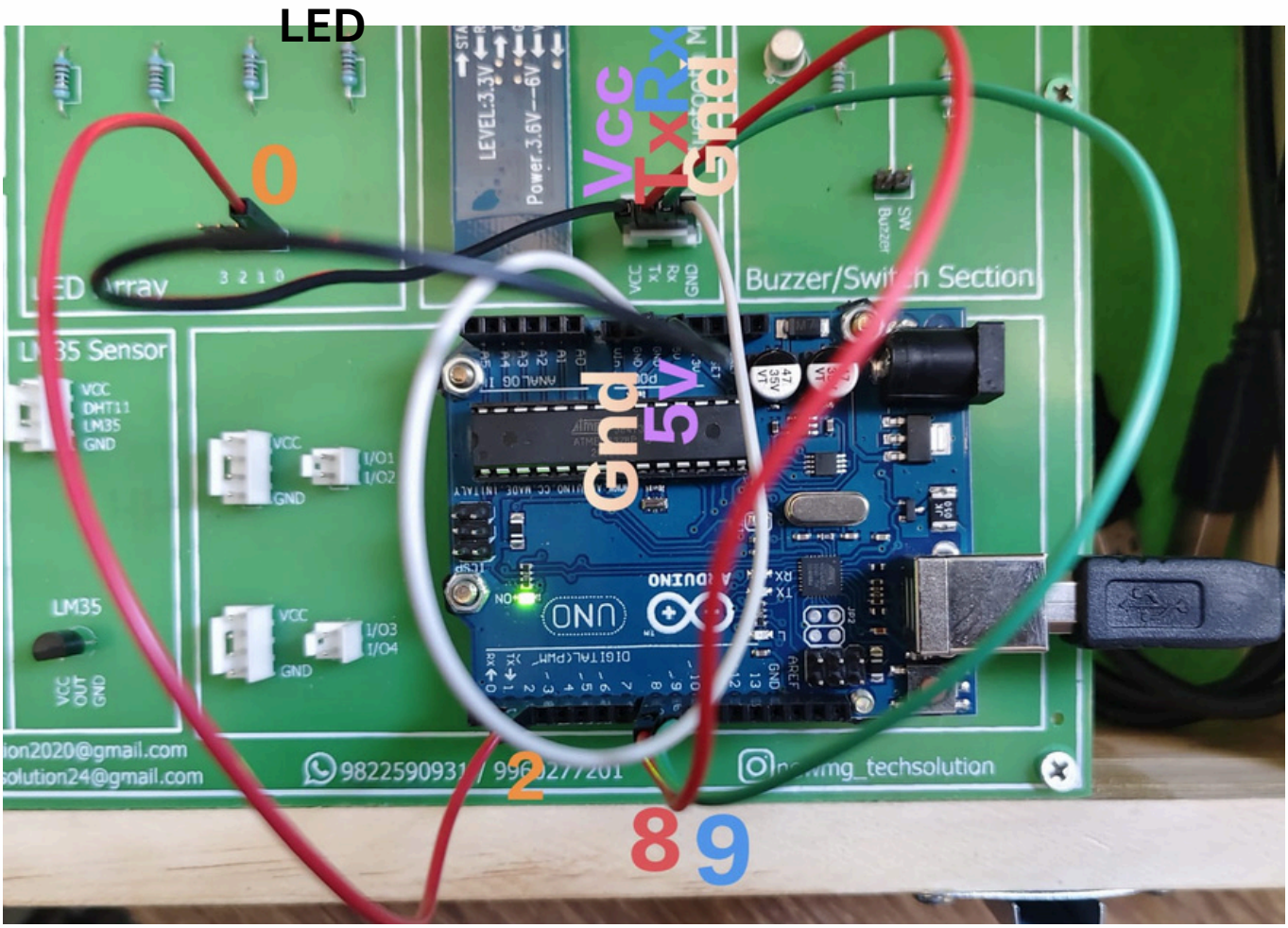

Enter 1 or 2 as command in app

Q5 State the application of Bluetooth.

1. Wireless headphones and speakers
2. File transfer between devices
3. Connecting keyboard and mouse
4. Smart home device control
5. Hands-free calling in cars

Q6 What is the range of Bluetooth device?

Bluetooth devices usually work within 10 meters range.

Slip 9. To study the RFID.

Q1 Draw the circuit / block diagram to interface RFID with Arduino and get it checked from examiner.

Circuit Diagram:

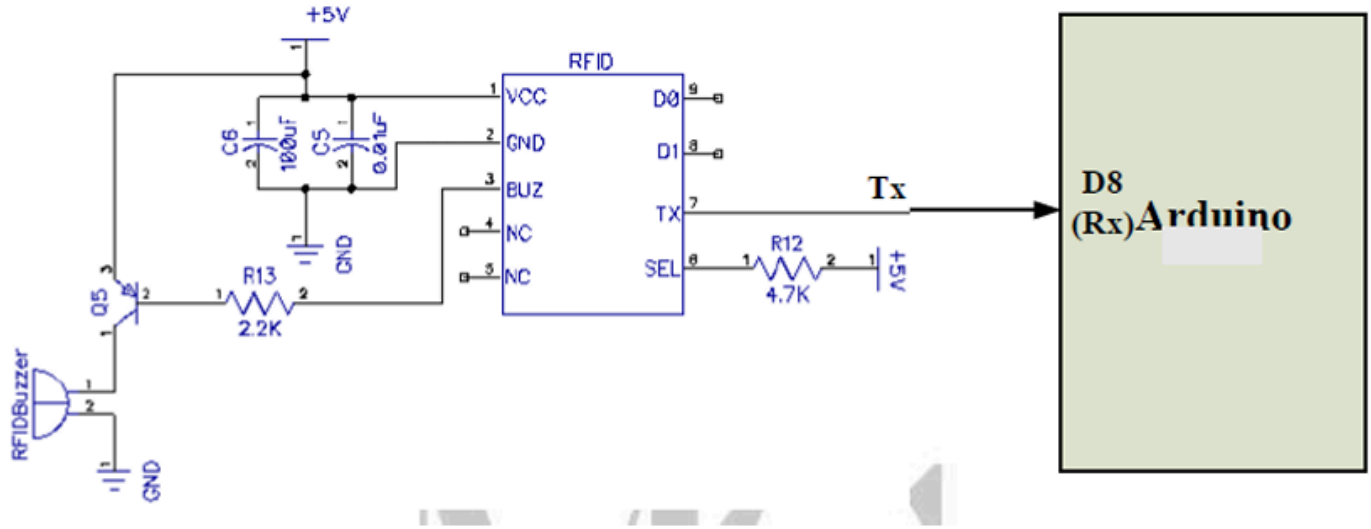

Q2 Write algorithm/ flowchart for same.

1. Start
2. Include SoftwareSerial library
3. Initialize RFID communication on pins 8 (RX) and 9 (TX)
4. Begin Serial and RFID communication at 9600 baud rate
5. Read data from RFID when available
6. Display the received data on Serial Monitor
7. End

Q3 Write program to detect the RFID tag and get it checked from the examiner.

```
#include <SoftwareSerial.h>
SoftwareSerial RFID(8,9);
void setup(){
  Serial.begin(9600);
  RFID.begin(9600);
}
void loop(){
  while(RFID.available()){
    char data = RFID.read();
    Serial.print(data);
  }
}
```

Q4 Execute the program using Arduino IDE. Show the output to the examiner.

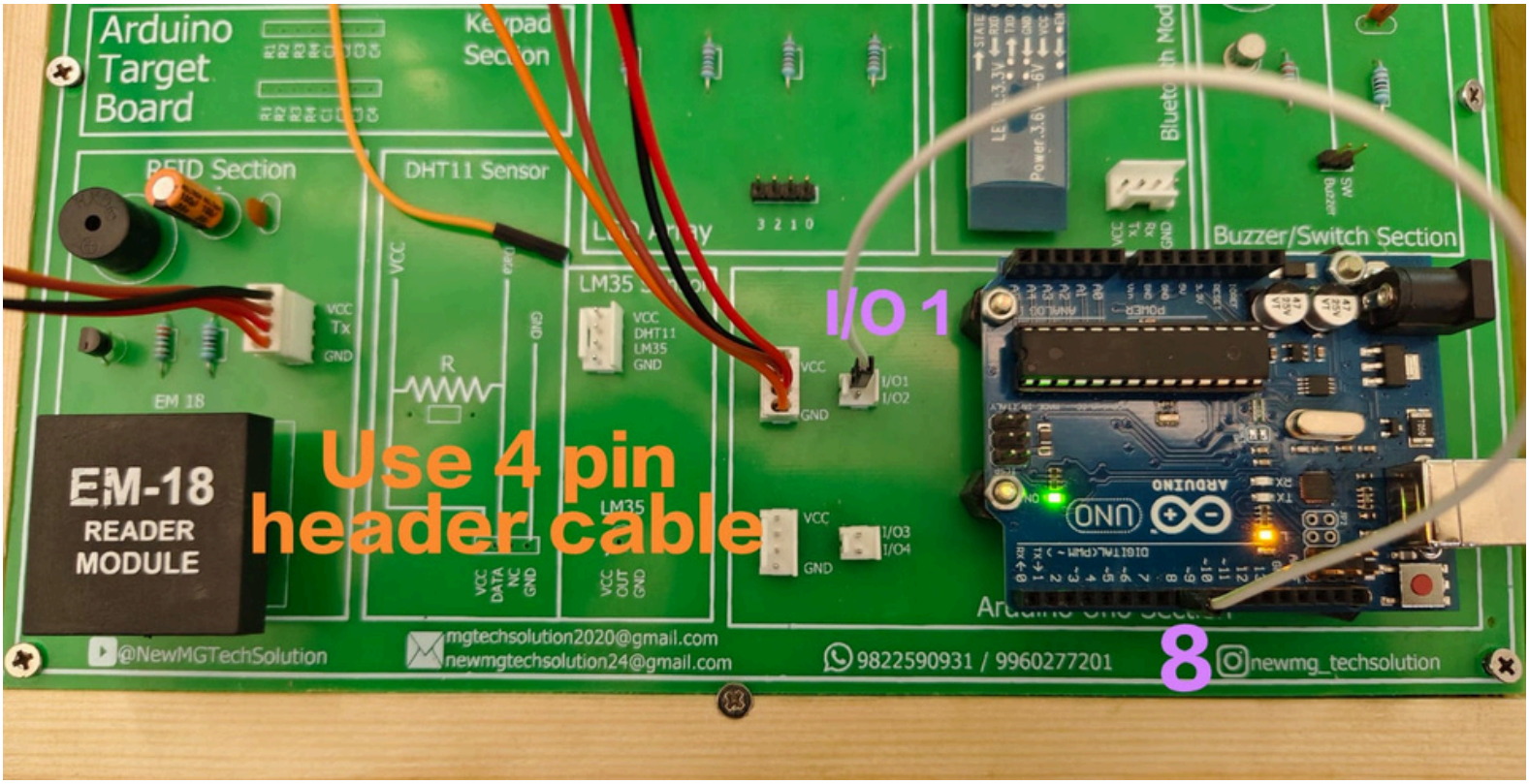

Q5 State any two differences between active and passive RFID tag.

Feature	Active RFID Tag	Passive RFID Tag
Power Source	Has internal battery	No battery (uses reader signal)
Range	Long range (up to 100 m or more)	Short range (few cm to meters)
Cost	Expensive	Cheaper

Q6 State the application of RFID.

1. Attendance Systems: Automatically records attendance of students/employees.
2. Toll Collection**:** Used in highways (FASTag) for automatic toll payment.
3. Library Management: Helps in tracking books and issuing/returning automatically.
4. Tracking & Security: Used for tracking vehicles, luggage (airports), and assets.

Slip 10. Point to point communication using Zig-Bee.

Q1 Draw the circuit / block diagram of point-to-point communication using Zig-Bee and Arduino. Also get it checked from examiner.

Circuit Diagram:

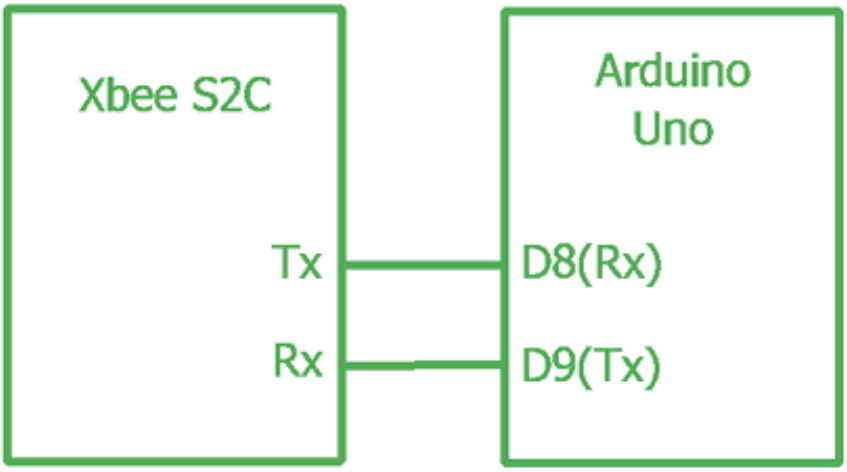

Q2 Write algorithm/ flowchart for same.

1. Start
2. Initialize SoftwareSerial on pins 8 and 9 (for both transmitter and receiver)
3. Set baud rate to 9600
4. Transmitter sends message “Hello”
5. Receiver checks if data is available
6. Receiver reads incoming data
7. Display data on Serial Monitor
8. Wait for 2 seconds and repeat continuously
9. End

Q3 Write program for point-to-point communication using Zig-Bee and get it checked from the examiner.(Same as Labbook)

A) Transmitter PC/Board Code :-

```
#include <SoftwareSerial.h>
SoftwareSerial mySerial(8, 9);
void setup()
{
  mySerial.begin(9600);
}
void loop()
{
  mySerial.println("hello");
  delay(2000);
}
```

B) Receiver PC/Board Code :-

```
#include <SoftwareSerial.h>
SoftwareSerial mySerial(8, 9);
void setup() {
Serial.begin(9600);
mySerial.begin(9600);
delay(1000);
}
void loop() {
while(mySerial.available())
{
Serial.write(mySerial.read());
}
}
```

Q4 Execute the program using Arduino IDE. Show the output to the examiner.

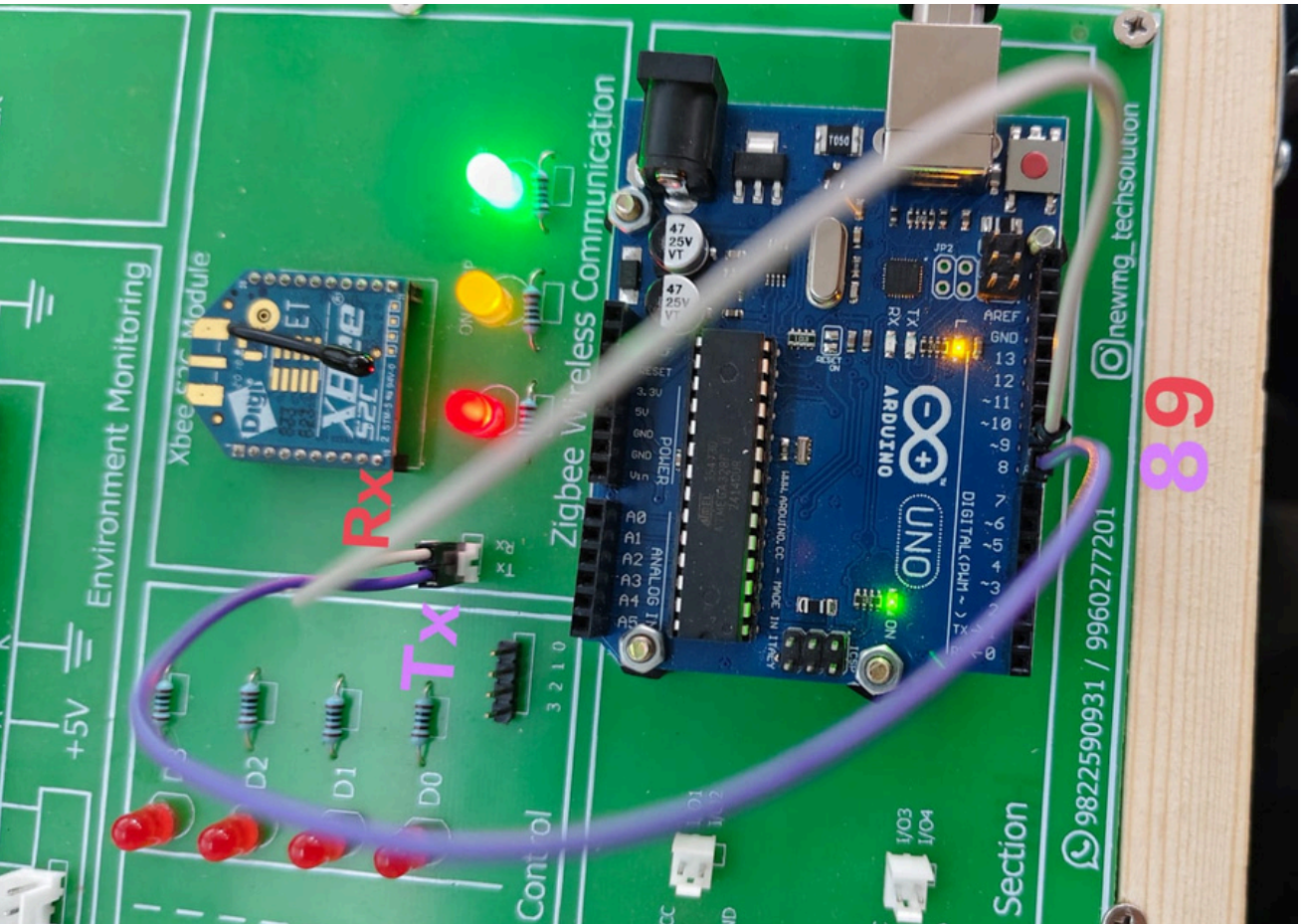

Connect Tx, Rx of Zigbee wireless communication to 8,9 pin respectively on Transmitter 1 and Receiver 1 Boards

Q5 List the names of short-range devices.

1. Bluetooth
2. ZigBee
3. Wi-Fi
4. RFID (Radio Frequency Identification)
5. NFC (Near Field Communication)
6. Infrared (IR) devices

Q6 State the applications of ZigBee.

1. Home automation (smart lights, fans, appliances)
2. Wireless sensor networks
3. Street light control systems
4. Industrial automation
5. Security and alarm systems

Slip 11. Wireless sensor node used for street light control.

Q1 Draw the circuit / block diagram of Wireless sensor node used for street light control and get it checked from examiner.

Circuit Diagram:

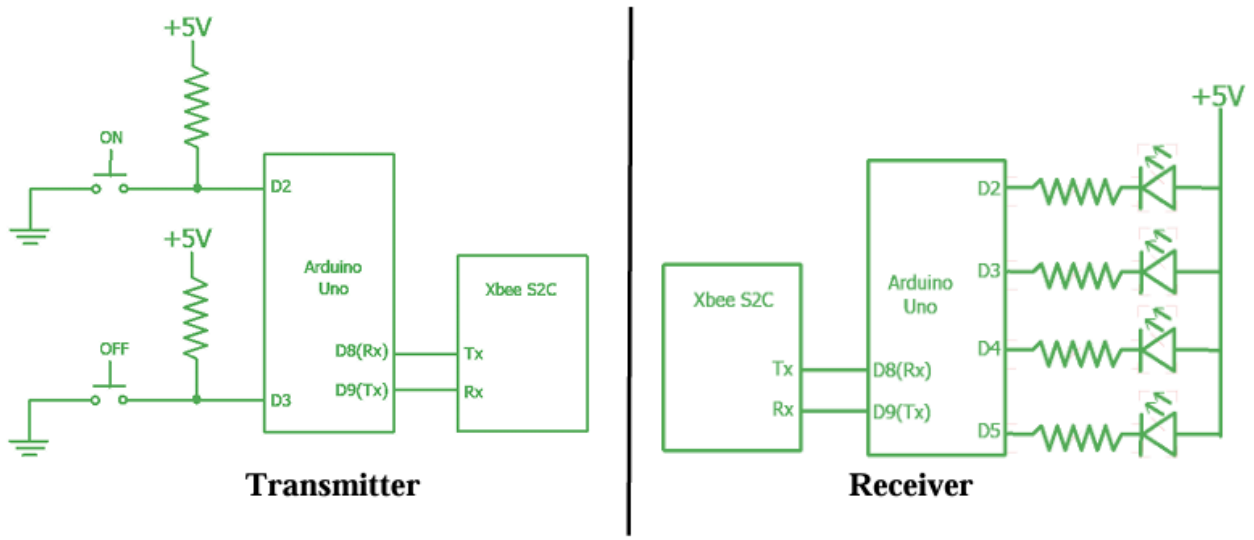

Q2 Write algorithm/ flowchart for same.

1. Start
2. Initialize SoftwareSerial on pins 8 and 9
3. Set baud rate to 9600
4. Set ON and OFF buttons as INPUT (Transmitter)
5. Set LED pins (2, 3, 4, 5) as OUTPUT (Receiver)
6. Read ON and OFF button state
7. If ON button is pressed, send ‘1’
8. If OFF button is pressed, send ‘2’
9. Receiver checks for incoming data
10. If data = ‘1’, turn OFF all lights
11. If data = ‘2’, turn ON all lights
12. Repeat continuously
13. End

Q3 Write program for wireless sensor node used for street light control and get it checked from the examiner.(Same as Labbook)

A) Transmitter PC/Board Code :-

```
#include <SoftwareSerial.h>
SoftwareSerial mySerial(8, 9);
int ONbutton = 2;
int OFFbutton = 3;
void setup()
{
mySerial.begin(9600);
pinMode(ONbutton, INPUT);
pinMode(OFFbutton, INPUT);
}
void loop()
{
int ONstate =
digitalRead(ONbutton);
int OFFstate =
digitalRead(OFFbutton);
if(ONstate == 0)
{
mySerial.println("1");
}
else if(OFFstate == 0)
{
mySerial.println("2");
}
delay(200);
}
```

B) Receiver PC/Board Code :-

```
#include <SoftwareSerial.h>
SoftwareSerial mySerial(8, 9);
void setup()
{
mySerial.begin(9600);
pinMode(2, OUTPUT);
pinMode(3, OUTPUT);
pinMode(4, OUTPUT);
pinMode(5, OUTPUT);
delay(1000);
}
void loop()
{
while(mySerial.available())
{
char inputByte= mySerial.read();
if (inputByte=='1'){
digitalWrite(2, LOW);
digitalWrite(3, LOW);
digitalWrite(4, LOW);
digitalWrite(5, LOW);
}
else if (inputByte=='2')
{
digitalWrite(2, HIGH);
digitalWrite(3, HIGH);
digitalWrite(4, HIGH);
digitalWrite(5, HIGH);
}
}
}
```

Q4 Execute the program using Arduino IDE. Show the output to the examiner.

A) Transmitter 1 Board Connections:-

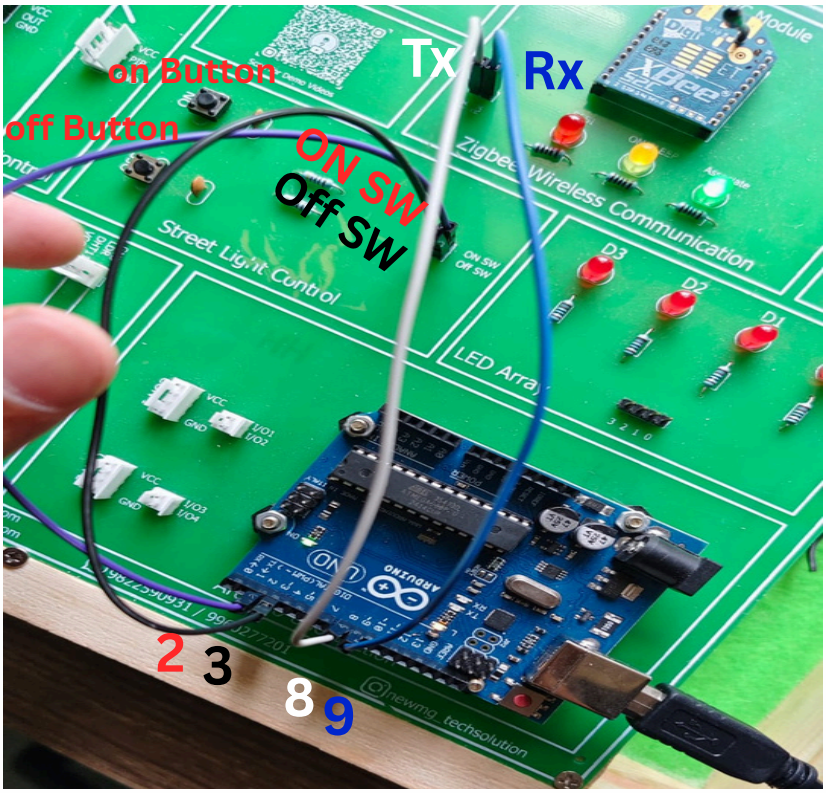

When “on button” on transmitter board is pressed all leds on receiver board turns on. And on “off button” all leds turn off.

B) Receiver 1 Board Connections:-

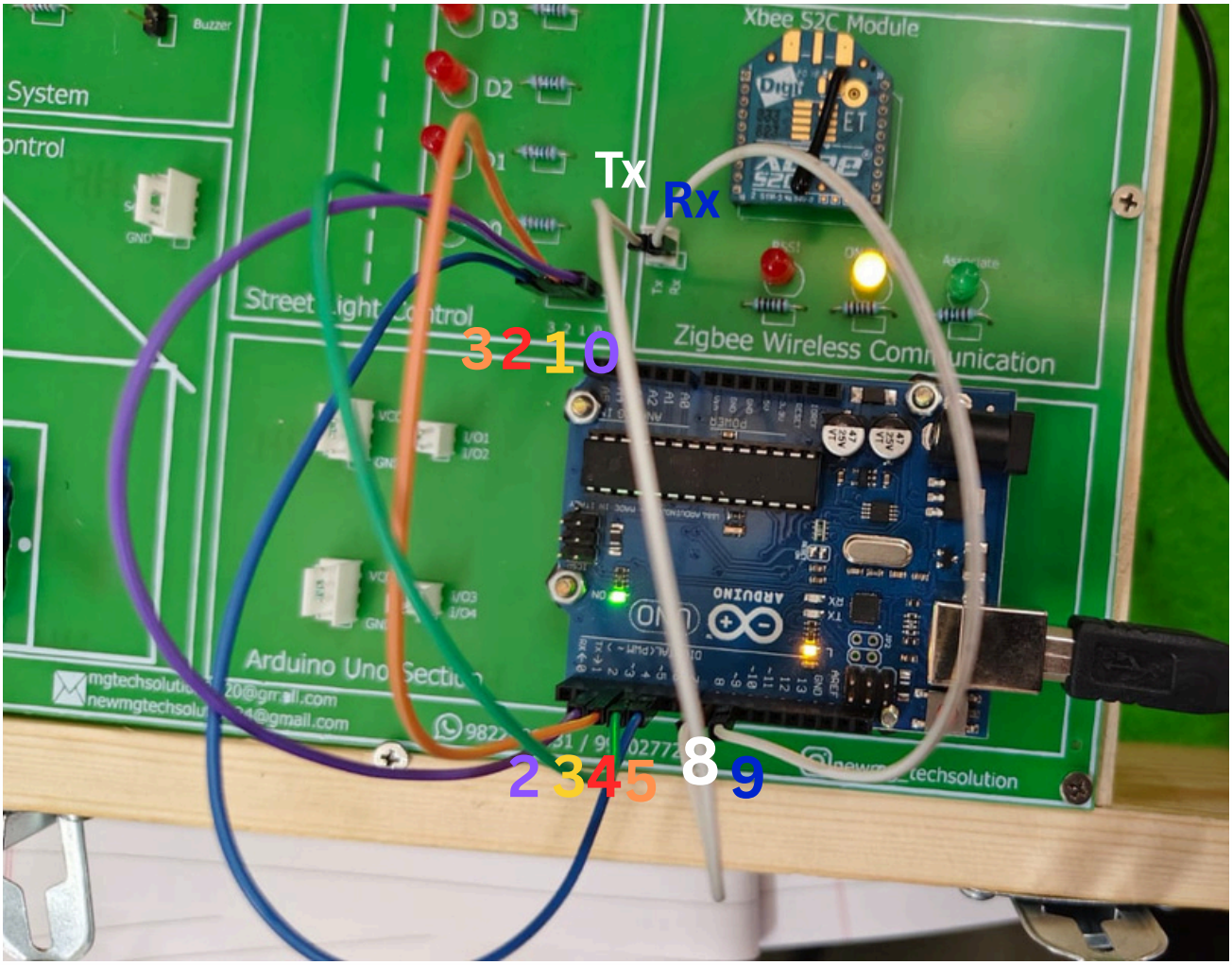

Q5 State the application of this experiment.

1. Used to turn ON/OFF street lights remotely without manual switching.
2. Helps in automation of city lighting systems i.e in modern smart city infrastructure.
3. Demonstrates basic wireless data transmission between two nodes.
4. Can be extended using RF modules, ZigBee, or IoT systems.
5. Useful in modern smart city infrastructure for automated lighting.
6. Can be integrated with sensors like LDR (light sensor) or motion sensors.

Q6 State the function of “Serial.begin(9600)”.

1. It enables communication between the Arduino and devices such as a computer, another microcontroller, or modules.
2. The value **9600** represents the data transmission speed in **bits per second (bps)**.
3. Both sender and receiver must use the same baud rate (9600 here) to correctly send and receive data.