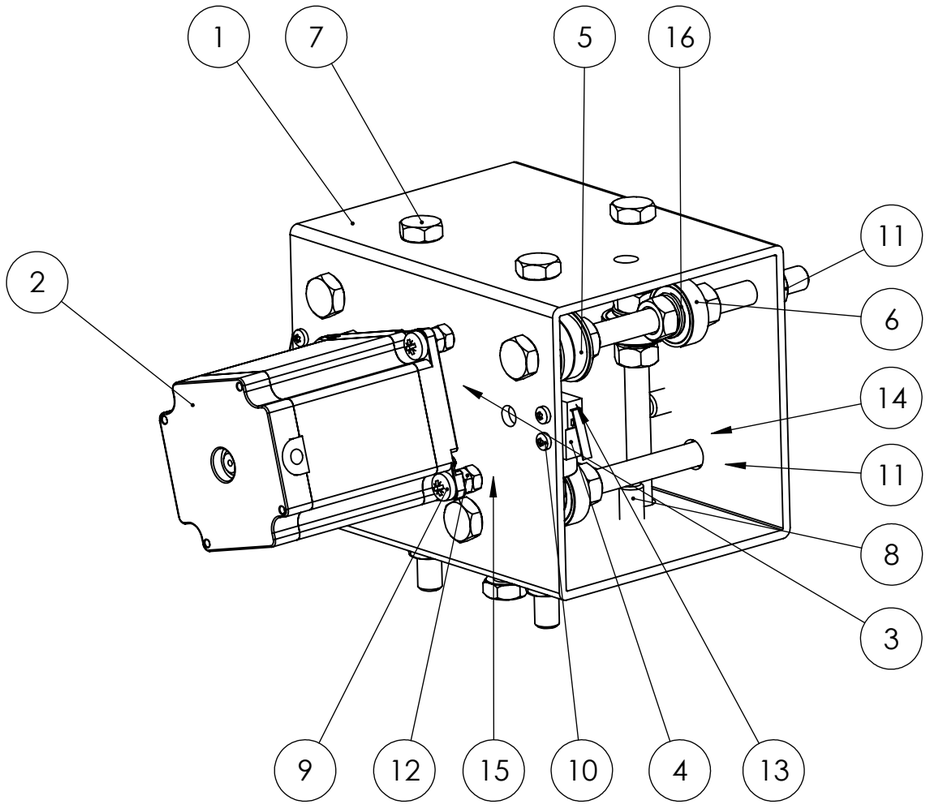

ITEM NO.	PART NUMBER	DESCRIPTION	QTY.
1	Beam Short Y1	SHS 100x100x3x130	1
2	NEMA 23 Stepper motor		1
3	Timing pulley	Flanged timing pulley	1
4	Micro switch		2
5	Bearing F608Z	Belt Ball Bearing fi22	4
6	Bearing 608ZZ	Ball Bearing fi22	6
7	DIN 933 M8x120 Grade A 8.8	M8 Hex Bolt	6
8	DIN 933 M8x20 Grade A 8.8	M8 Hex Bolt	4
9	DIN 7985 M5x25 Grade A2f	M5 Cross Bolt	4
10	Bolt ISO 14583 M3x12	M3 Torx Bolt	4
11	DIN 934 M8 8.8	M8 Hex Nut	20
12	DIN 934 M5 8.8	M5 Hex Nut	12
13	DIN 934 M3 8.8	M3 Hex Nut	4
14	DIN 125 8.4 Grade A	M8 Washer Grade A	10
15	Washer DIN 125 5.3	M5 Washer	4
16	DIN 127 8.5	M8 Spring Washer	12

UNLESS OTHERWISE SPECIFIED:
DIMENSIONS ARE IN MILLIMETERS
SURFACE FINISH:
TOLERANCES:
LINEAR:
ANGULAR:

FINISH:

DEBURR AND BREAK SHARP EDGES

DO NOT SCALE DRAWING

REVISION

	NAME	SIGNATURE	DATE
DRAWN			
CHK'D			
APPV'D			
MFG			
Q.A			

MATERIAL:

WEIGHT:

DWG NO. Trolley Y

TITLE:

A3

SCALE:1:2

SHEET 1 OF 1