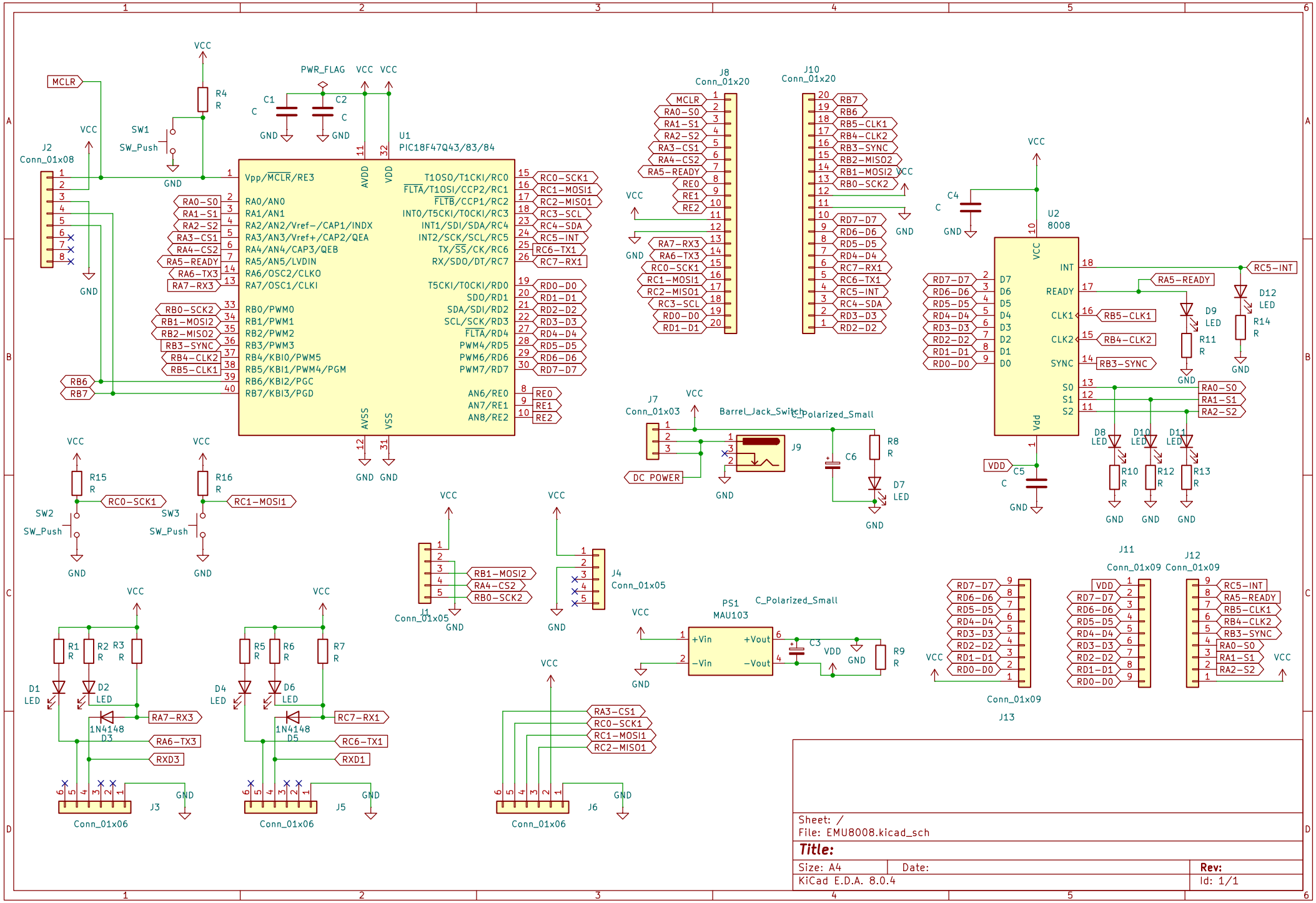
U1
PIC18F47Q43/83/84
Vpp/MCLR/RE3
RA0/AN0
RA1/AN1
RA2/AN2/Vref-/CAP1/INDX
RA3/AN3/Vref+/CAP2/QEA
RA4/AN4/CAP3/QEB
RA5/AN5/LVDIN
RA6/OSC2/CLKO
RA7/OSC1/CLKI
RB0/PWM0
RB1/PWM1
RB2/PWM2
RB3/PWM3
RB4/KBI0/PWM5
RB5/KBI1/PWM4/PGM
RB6/KBI2/PGC
RB7/KBI3/PGD
T1OSO/T1CKI/RC0
FLTA/T1OSI/CCP2/RC1
FLTB/CCP1/RC2
INT0/T5CKI/T0CKI/RC3
INT1/SDI/SDA/RC4
INT2/SCK/SCL/RC5
TX/SS/CK/RC6
RX/SDO/DT/RC7
T5CKI/T0CKI/RD0
SDO/RD1
SDA/SDI/RD2
SCL/SCK/RD3
FLTA/RD4
PWM4/RD5
PWM6/RD6
PWM7/RD7
AN6/RE0
AN7/RE1
AN8/RE2
AVDD
VDD
AVSS
VSS
J2
Conn_01x08
J8
Conn_01x20
J10
Conn_01x20
U2
8008
J7
Conn_01x03
DC POWER
Barrel_Jack_Switch
J9
C_Polarized_Small
PS1
MAU103
+Vin
-Vin
+Vout
-Vout
J1
Conn_01x05
J4
Conn_01x05
J3
Conn_01x06
J5
Conn_01x06
J6
Conn_01x06
J11
Conn_01x09
J12
Conn_01x09
J13
Conn_01x09
SW1
SW_Push
SW2
SW_Push
SW3
SW_Push
PWR_FLAG
VCC
GND
MCLR
RA0-S0
RA1-S1
RA2-S2
RA3-CS1
RA4-CS2
RA5-READY
RA6-TX3
RA7-RX3
RB0-SCK2
RB1-MOSI2
RB2-MISO2
RB3-SYNC
RB4-CLK2
RB5-CLK1
RB6
RB7
RC0-SCK1
RC1-MOSI1
RC2-MISO1
RC3-SCL
RC4-SDA
RC5-INT
RC6-TX1
RC7-RX1
RD0-D0
RD1-D1
RD2-D2
RD3-D3
RD4-D4
RD5-D5
RD6-D6
RD7-D7
RE0
RE1
RE2
RXD3
RXD1
1N4148
D3
D5
D1
D2
D4
D6
D7
D8
D9
D10
D11
D12
D13
LED
R1
R2
R3
R4
R5
R6
R7
R8
R9
R10
R11
R12
R13
R14
R15
R16
C1
C2
C3
C4
C5
C6
C
VDD
INT
READY
CLK1
CLK2
SYNC
S0
S1
S2
D7
D6
D5
D4
D3
D2
D1
D0
Sheet: /
File: EMU8008.kicad_sch
Title:
Size: A4
Date:
Rev:
KiCad E.D.A. 8.0.4
Id: 1/1