IR Receiver Modules for Remote Control Systems

DESCRIPTION

This IR receiver series is optimized for long burst remote control systems in different environments. The customer can chose between different IC settings (AGC variants), to find the optimum solution for his application. The higher the AGC, the better noise is suppressed, but the lower the code compatibility.

The devices contain a PIN diode and a preamplifier assembled on a lead frame. The epoxy package contains an IR filter. The demodulated output signal can be directly connected to a microprocessor for decoding. These components have not been qualified to automotive specifications.

FEATURES

- Individual IC settings to reach maximum performance
- Immunity against noise (lamps, LCD TV, Wi-Fi)
- Low supply current
- Photo detector and preamplifier in one package
- Supply voltage: 2.0 V to 5.5 V
- Material categorization:
  for definitions of compliance please see www.vishay.com/doc?99912

Pb-free

e3

RoHS COMPLIANT

HALOGEN FREE

GREEN (5-2008)

LINKS TO ADDITIONAL RESOURCES

Product Page | Marking | Packages | Holders | Bends and Cuts

APPLICATIONS

- Infrared remote control systems

DESIGN SUPPORT TOOLS

- 3D models
- Window size calculator

BLOCK DIAGRAM

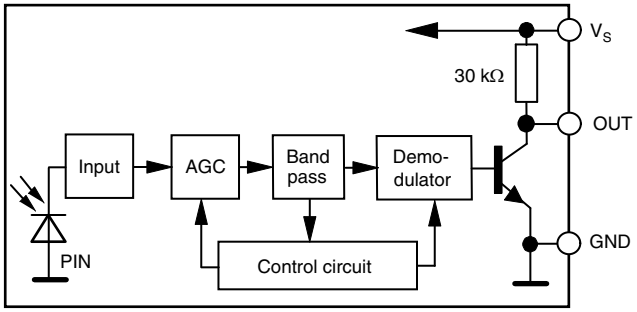

16833-22

THIS DOCUMENT IS SUBJECT TO CHANGE WITHOUT NOTICE. THE PRODUCTS DESCRIBED HEREIN AND THIS DOCUMENT ARE SUBJECT TO SPECIFIC DISCLAIMERS, SET FORTH AT www.vishay.com/doc?91000

MECHANICAL DATA

Pinning for TSOP44.., TSOP48..:

1 = OUT, 2 = GND, 3 = V_S

Pinning for TSOP22.., TSOP24..:

1 = OUT, 2 = V_S, 3 = GND

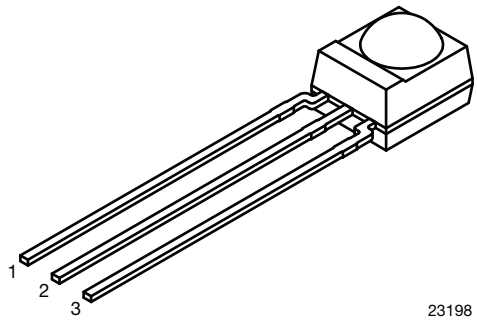

ORDERING CODE

TSOP2..., TSOP4... - 2160 pieces in tubes

APPLICATION CIRCUIT

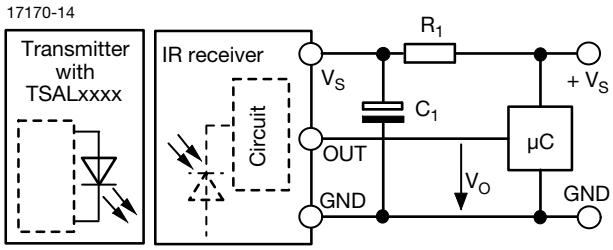

R_1 and C_1 recommended in case there are strong ripple or spikes on the supply line.

PARTS TABLE

AGC		LEGACY, FOR LONG BURST REMOTE CONTROLS (AGC2)		RECOMMENDED FOR LONG BURST CODES (AGC4)	
Carrier frequency	30 kHz	TSOP4830	TSOP2230	TSOP4430	TSOP2430
	33 kHz	TSOP4833	TSOP2233	TSOP4433	TSOP2433
	36 kHz	TSOP4836	TSOP2236	TSOP4436 (1)(2)(3)	TSOP2436 (1)(2)(3)
	38 kHz	TSOP4838	TSOP2238	TSOP4438 (4)(5)(6)(9)(10)	TSOP2438 (4)(5)(6)(9)(10)
	40 kHz	TSOP4840 (8)	TSOP2240 (8)	TSOP4440	TSOP2440
	56 kHz	TSOP4856 (11)	TSOP2256 (11)	TSOP4456 (6)(7)	TSOP2456 (6)(7)
Package		Mold			
Pinning		1 = OUT, 2 = GND, 3 = V_S	1 = OUT, 2 = V_S, 3 = GND	1 = OUT, 2 = GND, 3 = V_S	1 = OUT, 2 = V_S, 3 = GND
Dimensions (mm)		6.0 W x 6.95 H x 5.6 D			
Mounting		Leaded			
Application		Remote control			
Best choice for		(1) RC-5 (2) RC-6 (3) Panasonic (4) NEC (5) Sharp (6) r-step (7) Thomson RCA (8) Sony (9) Mitsubishi (10) Sejin 4PPM (11) Cisco			
Special options		• Narrow optical filter: www.vishay.com/doc?81590 • Wide optical filter: www.vishay.com/doc?82726			

ABSOLUTE MAXIMUM RATINGS

PARAMETER	TEST CONDITION	SYMBOL	VALUE	UNIT
Supply voltage		V_S	-0.3 to +6	V
Supply current		I_S	5	mA
Output voltage		V_O	-0.3 to 5.5	V
Voltage at output to supply		V_S - V_O	-0.3 to (V_S + 0.3)	V
Output current		I_O	5	mA
Junction temperature		T_j	100	°C
Storage temperature range		T_{stg}	-25 to +85	°C
Operating temperature range		T_{amb}	-25 to +85	°C
Power consumption	$T_{amb} \leq 85$ °C	P_{tot}	10	mW
Soldering temperature	t ≤ 10 s, 1 mm from case	T_{sd}	260	°C

Note

- Stresses beyond those listed under “Absolute Maximum Ratings” may cause permanent damage to the device. This is a stress rating only and functional operation of the device at these or any other conditions beyond those indicated in the operational sections of this specification is not implied. Exposure to absolute maximum rating conditions for extended periods may affect the device reliability

THIS DOCUMENT IS SUBJECT TO CHANGE WITHOUT NOTICE. THE PRODUCTS DESCRIBED HEREIN AND THIS DOCUMENT ARE SUBJECT TO SPECIFIC DISCLAIMERS, SET FORTH AT www.vishay.com/doc?91000

ELECTRICAL AND OPTICAL CHARACTERISTICS (T_{amb} = 25 °C, unless otherwise specified)						
PARAMETER	**TEST CONDITION**	**SYMBOL**	**MIN.**	**TYP.**	**MAX.**	**UNIT**
Supply current	E_v = 0, V_S = 3.3 V	I_{SD}	0.25	0.35	0.45	mA
	E_v = 40 klx, sunlight	I_{SH}	-	0.45	-	mA
Supply voltage		V_S	2.0	-	5.5	V
Transmission distance	E_v = 0, test signal see Fig. 1, IR diode TSAL6200, I_F = 50 mA	d	-	24	-	m
Output voltage low	I_{OSL} = 0.5 mA, E_e = 0.7 mW/m², test signal see Fig. 1	V_{OSL}	-	-	100	mV
Minimum irradiance	Test signal: RC5 code	$E_{e\ min.}$	-	0.12	0.25	mW/m²
	Test signal: NEC code	$E_{e\ min.}$	-	0.16	0.35	mW/m²
Maximum irradiance	$t_{pi} - 4/f_o < t_{po} < t_{pi} + 4/f_o$, test signal see Fig. 1	$E_{e\ max.}$	30	-	-	W/m²
Directivity	Angle of half transmission distance	$\varphi_{1/2}$	-	± 45	-	deg

TYPICAL CHARACTERISTICS (T_{amb} = 25 °C, unless otherwise specified)

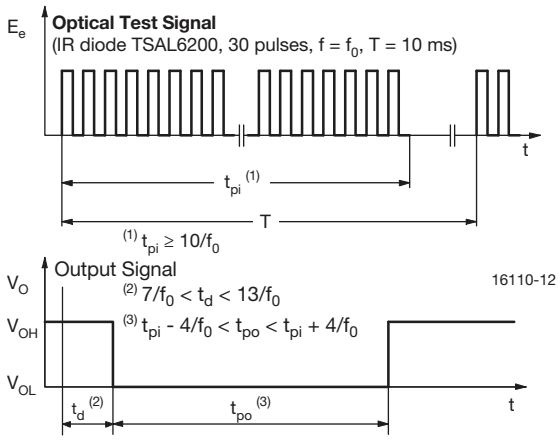

Fig. 1 - Output Active Low

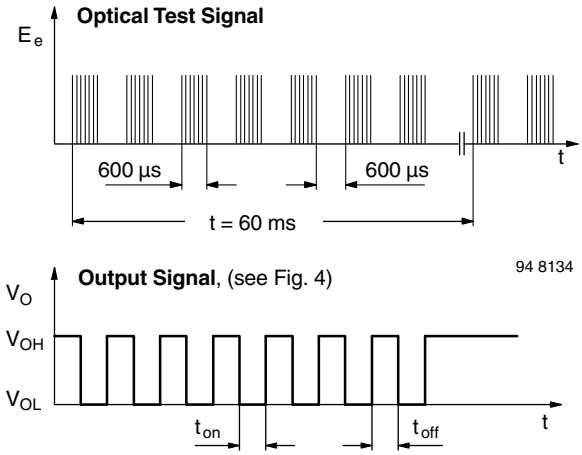

Fig. 3 - Output Function

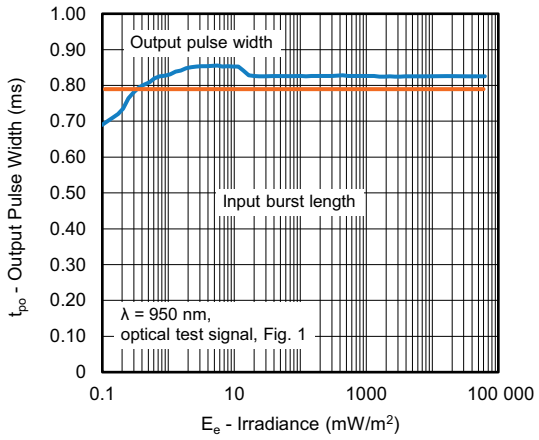

Fig. 2 - Pulse Length and Sensitivity in Dark Ambient

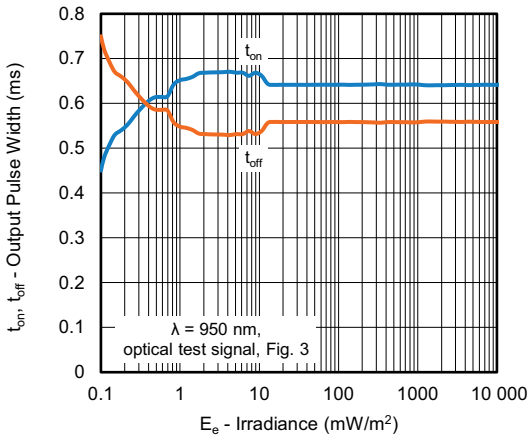

Fig. 4 - Output Pulse Diagram

THIS DOCUMENT IS SUBJECT TO CHANGE WITHOUT NOTICE. THE PRODUCTS DESCRIBED HEREIN AND THIS DOCUMENT ARE SUBJECT TO SPECIFIC DISCLAIMERS, SET FORTH AT www.vishay.com/doc?91000

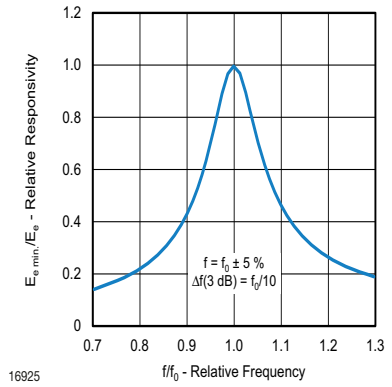

Fig. 5 - Frequency Dependence of Responsivity

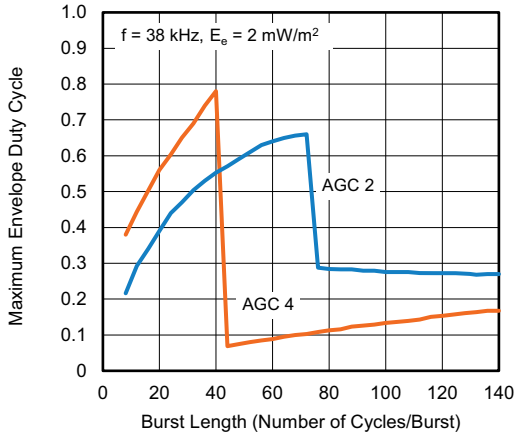

Fig. 8 - Max. Envelope Duty Cycle vs. Burst Length

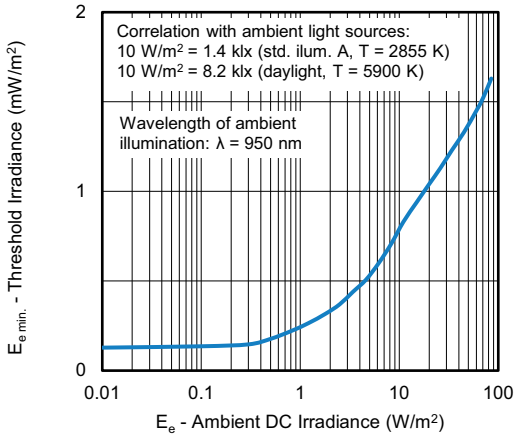

Fig. 6 - Sensitivity in Bright Ambient

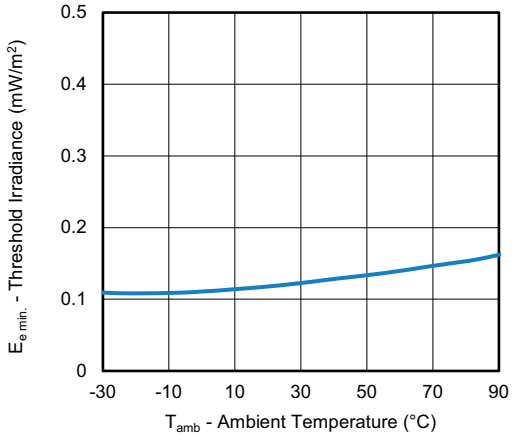

Fig. 9 - Sensitivity vs. Ambient Temperature

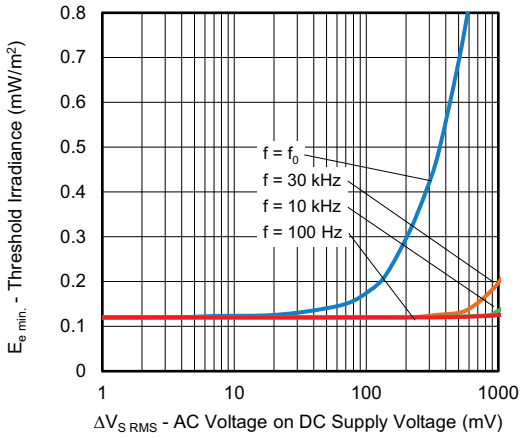

Fig. 7 - Sensitivity vs. Supply Voltage Disturbances

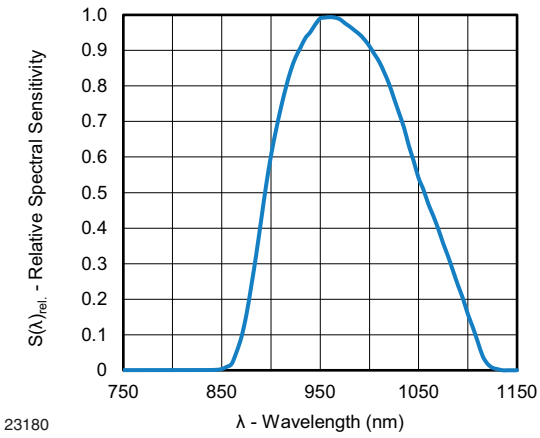

Fig. 10 - Relative Spectral Sensitivity vs. Wavelength

THIS DOCUMENT IS SUBJECT TO CHANGE WITHOUT NOTICE. THE PRODUCTS DESCRIBED HEREIN AND THIS DOCUMENT ARE SUBJECT TO SPECIFIC DISCLAIMERS, SET FORTH AT www.vishay.com/doc?91000

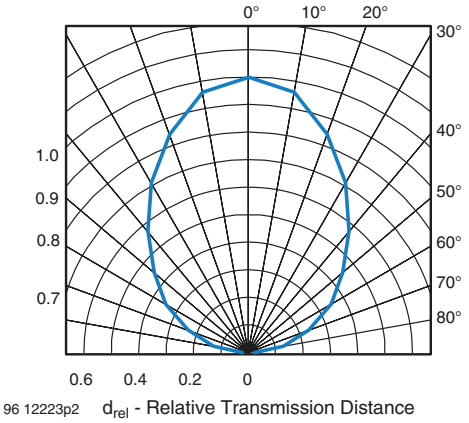

Fig. 11 - Horizontal Directivity

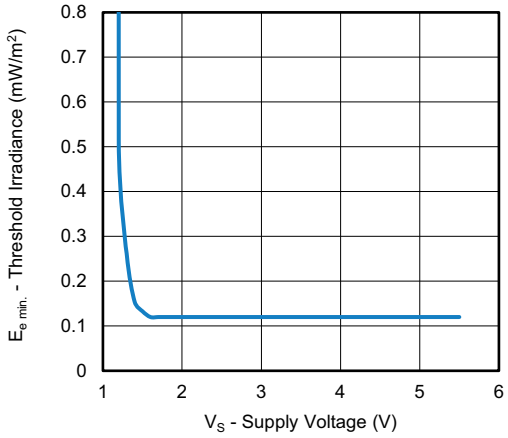

Fig. 12 - Sensitivity vs. Supply Voltage

THIS DOCUMENT IS SUBJECT TO CHANGE WITHOUT NOTICE. THE PRODUCTS DESCRIBED HEREIN AND THIS DOCUMENT ARE SUBJECT TO SPECIFIC DISCLAIMERS, SET FORTH AT www.vishay.com/doc?91000

SUITABLE DATA FORMAT

This series is designed to suppress spurious output pulses due to noise or disturbance signals. The devices can distinguish data signals from noise due to differences in frequency, burst length, and envelope duty cycle. The data signal should be close to the device's band-pass center frequency (e.g. 38 kHz) and fulfill the conditions in the table below.

When a data signal is applied to the product in the presence of a disturbance, the sensitivity of the receiver is automatically reduced by the AGC to insure that no spurious pulses are present at the receiver's output. Some examples which are suppressed are:

- DC light (e.g. from tungsten bulbs sunlight)
- Continuous signals at any frequency
- Strongly or weakly modulated patterns from fluorescent lamps with electronic ballasts (see Fig. 13 or Fig. 14).
- 2.4 GHz and 5 GHz Wi-Fi

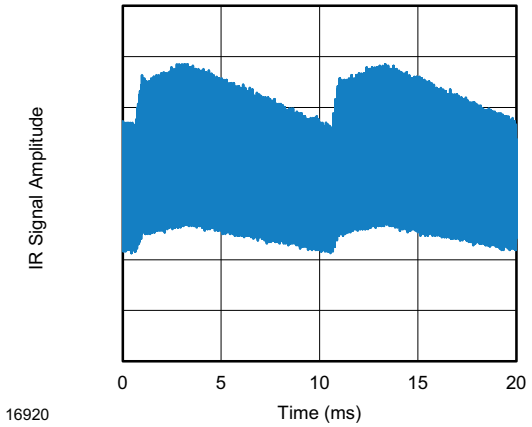

Fig. 13 - IR Disturbance from Fluorescent Lamp With Low Modulation

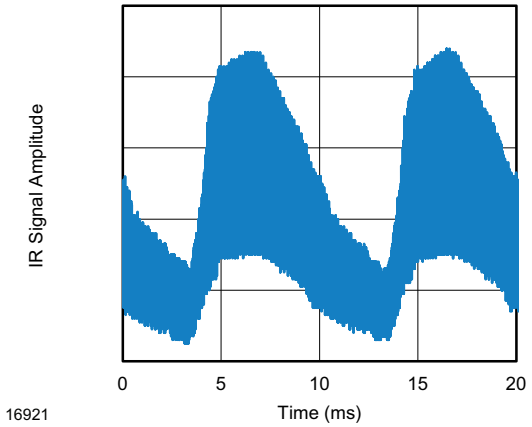

Fig. 14 - IR Disturbance from Fluorescent Lamp With High Modulation

	TSOP22.., TSOP48..	TSOP24.., TSOP44..
Minimum burst length	10 cycles/burst	10 cycles/burst
After each burst of length a minimum gap time is required of	10 to 72 cycles ≥ 10 cycles	10 to 40 cycles ≥ 10 cycles
For bursts greater than a minimum gap time in the data stream is needed of	72 cycles > 3 x burst length	40 cycles > 10 x burst length
Maximum number of continuous short bursts/second	950	1500
NEC code	Yes	Preferred
RC5/RC6 code	Yes	Preferred
Thomson RCA 56 kHz code	Yes	Preferred
Sharp code	Yes	Preferred
Sony code	Preferred	No
r-step code	Yes	Preferred
Suppression of interference from fluorescent lamps	Mild disturbance patterns are suppressed (example: signal pattern of Fig. 13)	Complex and critical disturbance patterns are suppressed (example: signal pattern of Fig. 14 or highly dimmed LCDs)

Note

- For data formats with short bursts please see the datasheet of TSOP23.., TSOP43..

THIS DOCUMENT IS SUBJECT TO CHANGE WITHOUT NOTICE. THE PRODUCTS DESCRIBED HEREIN AND THIS DOCUMENT ARE SUBJECT TO SPECIFIC DISCLAIMERS, SET FORTH AT www.vishay.com/doc?91000

PACKAGE DIMENSIONS in millimeters

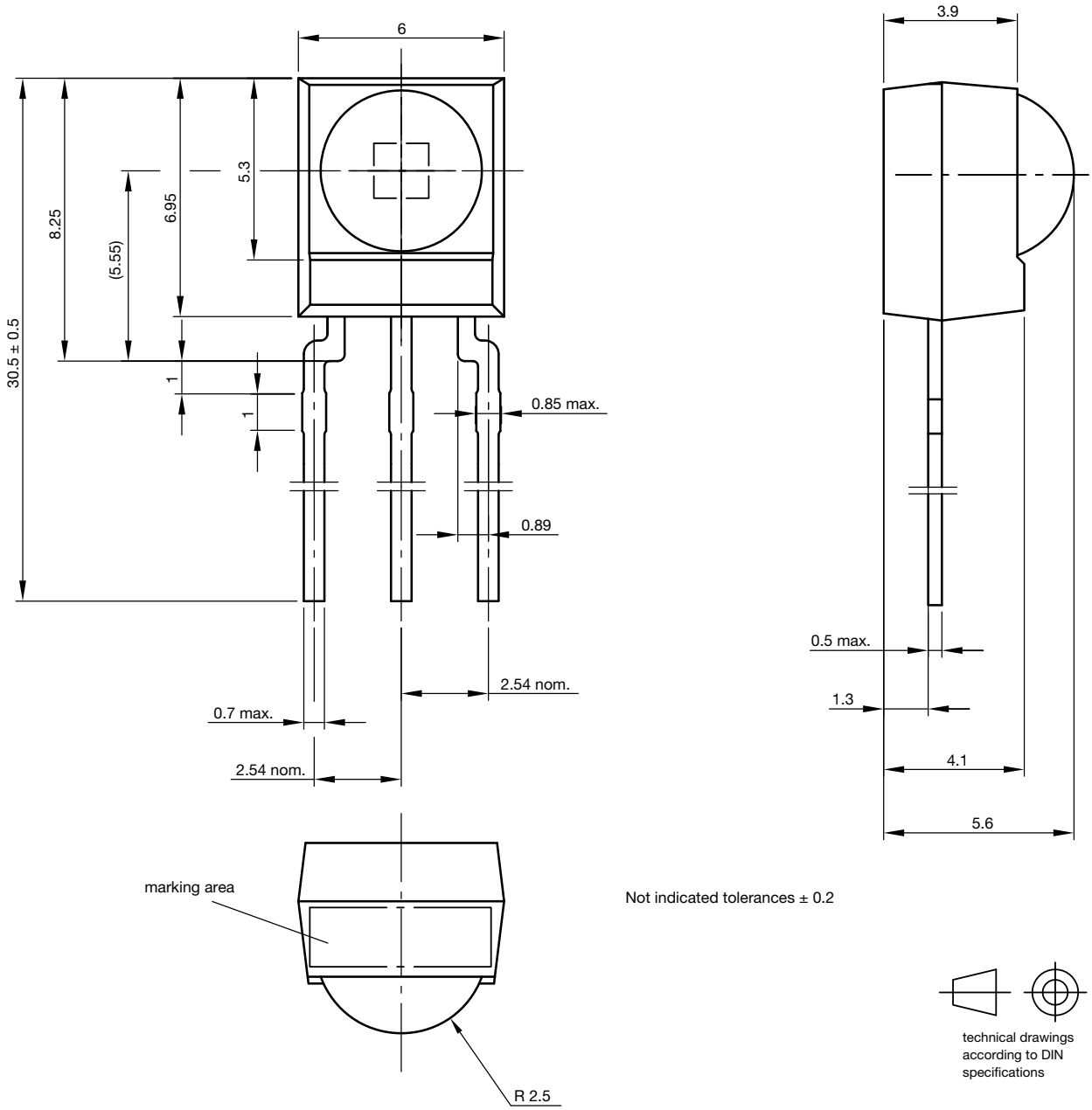

Drawing-No.: 6.550-5169.01-4
Issue: 9; 03.11.10
13655

THIS DOCUMENT IS SUBJECT TO CHANGE WITHOUT NOTICE. THE PRODUCTS DESCRIBED HEREIN AND THIS DOCUMENT ARE SUBJECT TO SPECIFIC DISCLAIMERS, SET FORTH AT www.vishay.com/doc?91000

Disclaimer

ALL PRODUCT, PRODUCT SPECIFICATIONS AND DATA ARE SUBJECT TO CHANGE WITHOUT NOTICE TO IMPROVE RELIABILITY, FUNCTION OR DESIGN OR OTHERWISE.

Vishay Intertechnology, Inc., its affiliates, agents, and employees, and all persons acting on its or their behalf (collectively, “Vishay”), disclaim any and all liability for any errors, inaccuracies or incompleteness contained in any datasheet or in any other disclosure relating to any product.

Vishay makes no warranty, representation or guarantee regarding the suitability of the products for any particular purpose or the continuing production of any product. To the maximum extent permitted by applicable law, Vishay disclaims (i) any and all liability arising out of the application or use of any product, (ii) any and all liability, including without limitation special, consequential or incidental damages, and (iii) any and all implied warranties, including warranties of fitness for particular purpose, non-infringement and merchantability.

Statements regarding the suitability of products for certain types of applications are based on Vishay's knowledge of typical requirements that are often placed on Vishay products in generic applications. Such statements are not binding statements about the suitability of products for a particular application. It is the customer's responsibility to validate that a particular product with the properties described in the product specification is suitable for use in a particular application. Parameters provided in datasheets and / or specifications may vary in different applications and performance may vary over time. All operating parameters, including typical parameters, must be validated for each customer application by the customer's technical experts. Product specifications do not expand or otherwise modify Vishay's terms and conditions of purchase, including but not limited to the warranty expressed therein.

Hyperlinks included in this datasheet may direct users to third-party websites. These links are provided as a convenience and for informational purposes only. Inclusion of these hyperlinks does not constitute an endorsement or an approval by Vishay of any of the products, services or opinions of the corporation, organization or individual associated with the third-party website. Vishay disclaims any and all liability and bears no responsibility for the accuracy, legality or content of the third-party website or for that of subsequent links.

Vishay products are not designed for use in life-saving or life-sustaining applications or any application in which the failure of the Vishay product could result in personal injury or death unless specifically qualified in writing by Vishay. Customers using or selling Vishay products not expressly indicated for use in such applications do so at their own risk. Please contact authorized Vishay personnel to obtain written terms and conditions regarding products designed for such applications.

No license, express or implied, by estoppel or otherwise, to any intellectual property rights is granted by this document or by any conduct of Vishay. Product names and markings noted herein may be trademarks of their respective owners.

© 2026 VISHAY INTERTECHNOLOGY, INC. ALL RIGHTS RESERVED

THIS DOCUMENT IS SUBJECT TO CHANGE WITHOUT NOTICE. THE PRODUCTS DESCRIBED HEREIN AND THIS DOCUMENT ARE SUBJECT TO SPECIFIC DISCLAIMERS, SET FORTH AT www.vishay.com/doc?91000