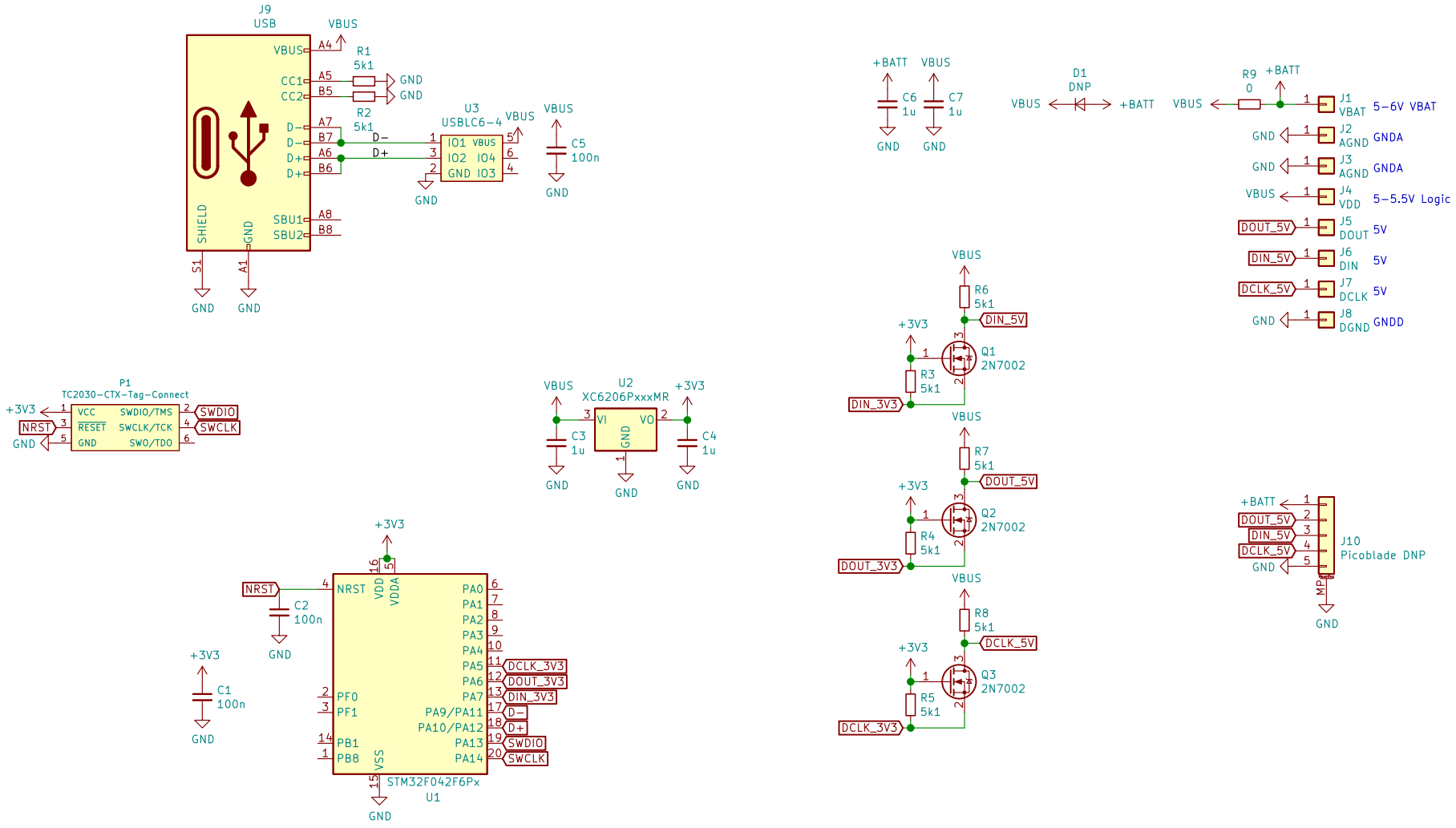

Sheet: /
File: lensmount−v1.sch

Title:

Size: A4	Date:	**Rev:**
KiCad E.D.A. kicad 5.1.5+dfsg1−2build2		Id: 1/1