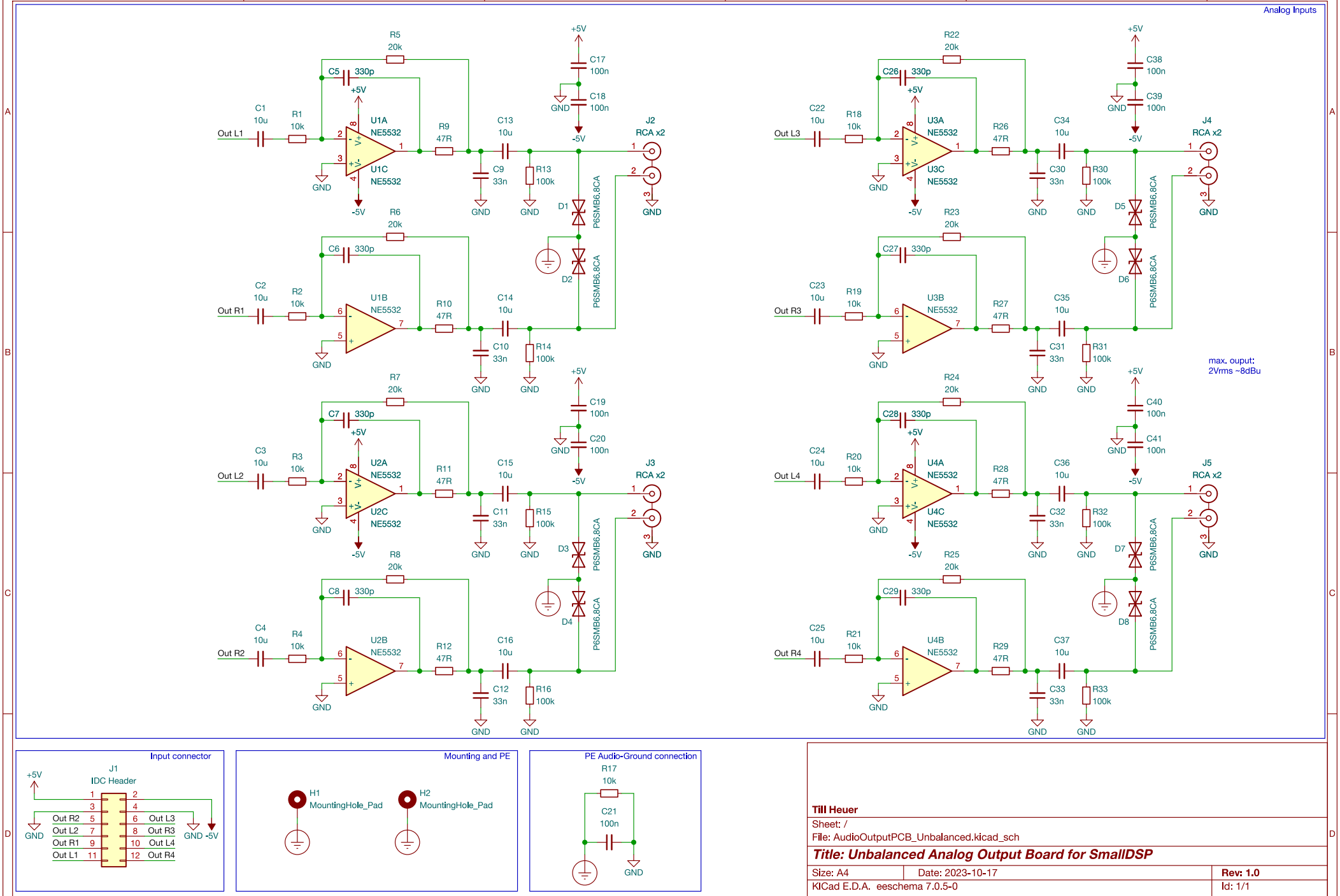

Till Heuer

Sheet: /

File: AudioOutputPCB_Unbalanced.kicad_sch

Title: Unbalanced Analog Output Board for SmallDSP

Size: A4	Date: 2023-10-17	**Rev: 1.0**
KICad E.D.A. eeschema 7.0.5-0		Id: 1/1