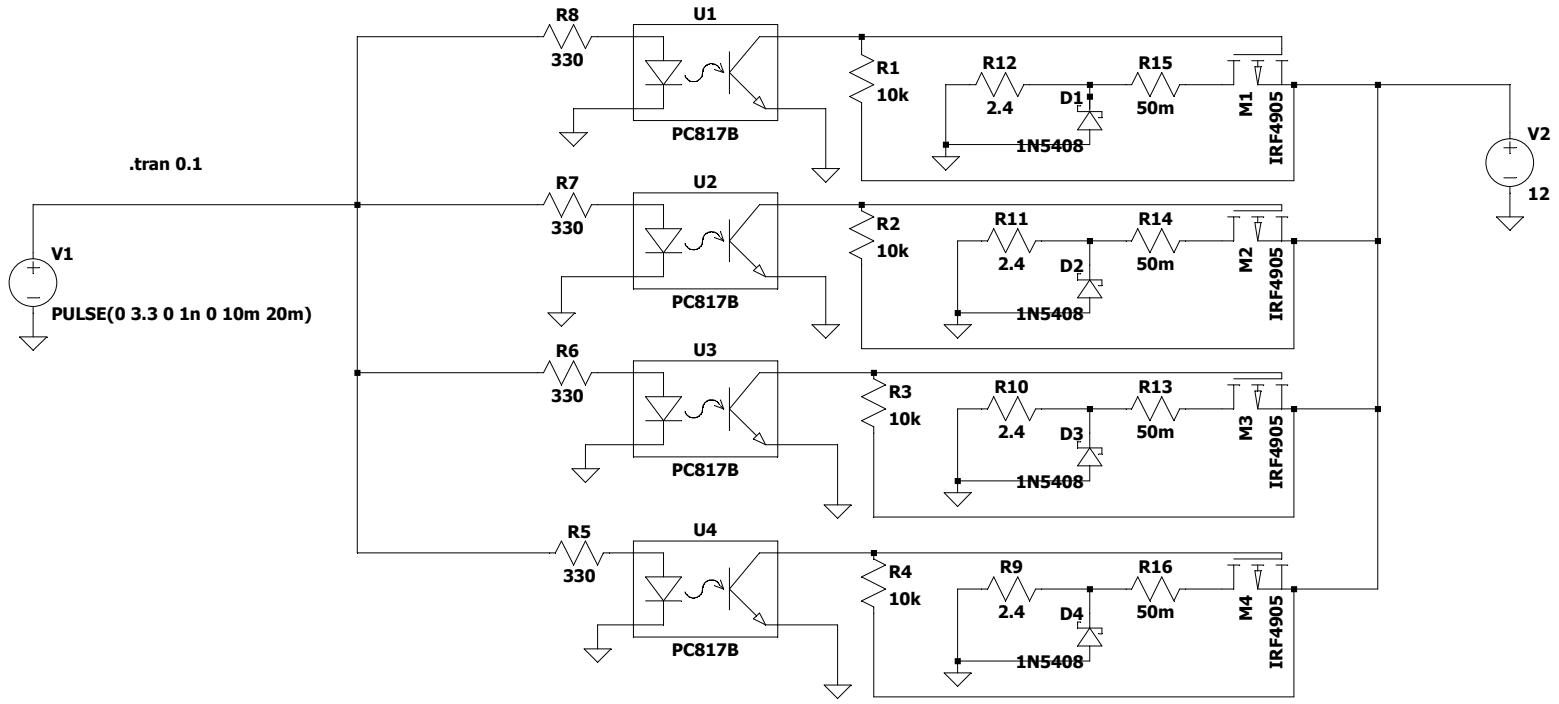

.model IRF4905 VDMOS(pchan Vto=-4.0 Rds=0.02 Kp=40 Cgs=3n Cgdmax=2n)
.model 1N5408 D(IS=5e-08 RS=0.044 N=1.5 BV=1000 IBV=5e-08 CJO=4e-11 TT=3e-06)