Creo work

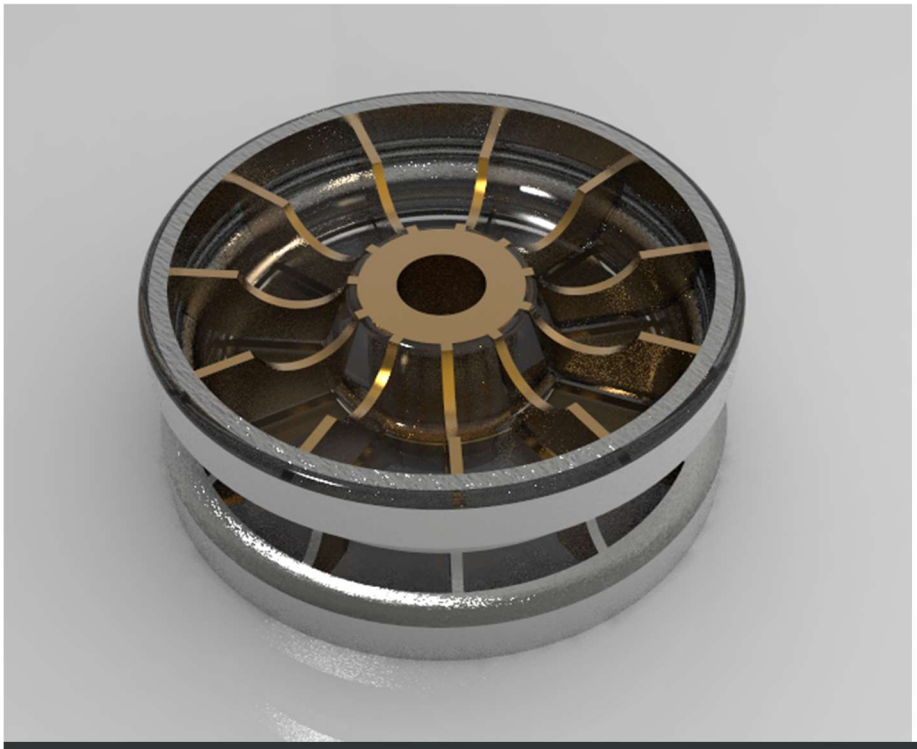

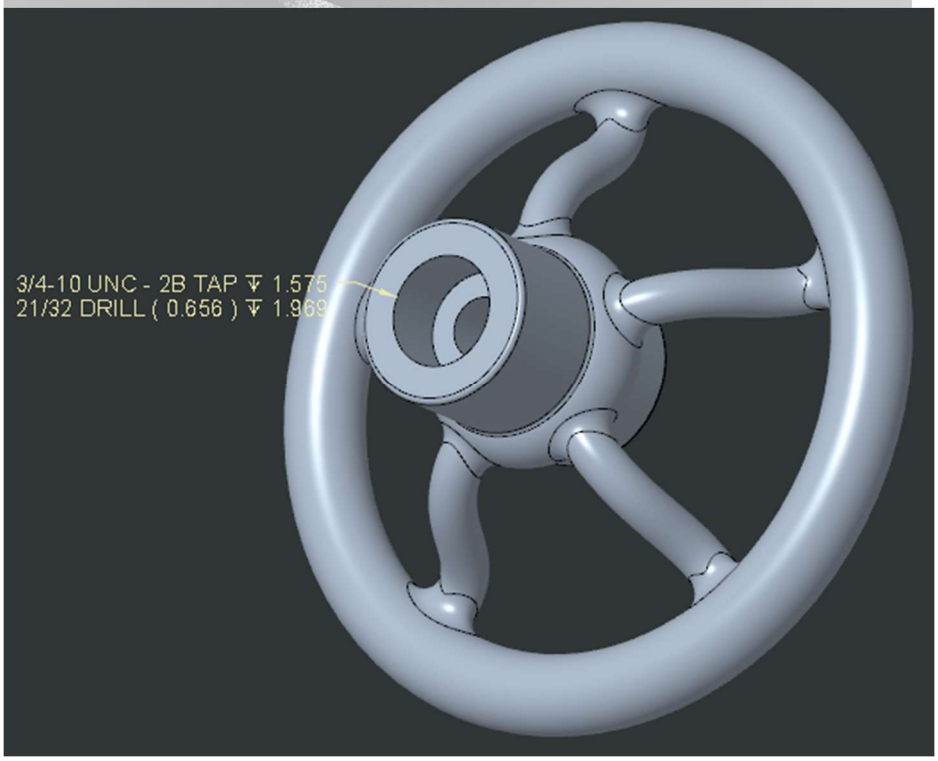

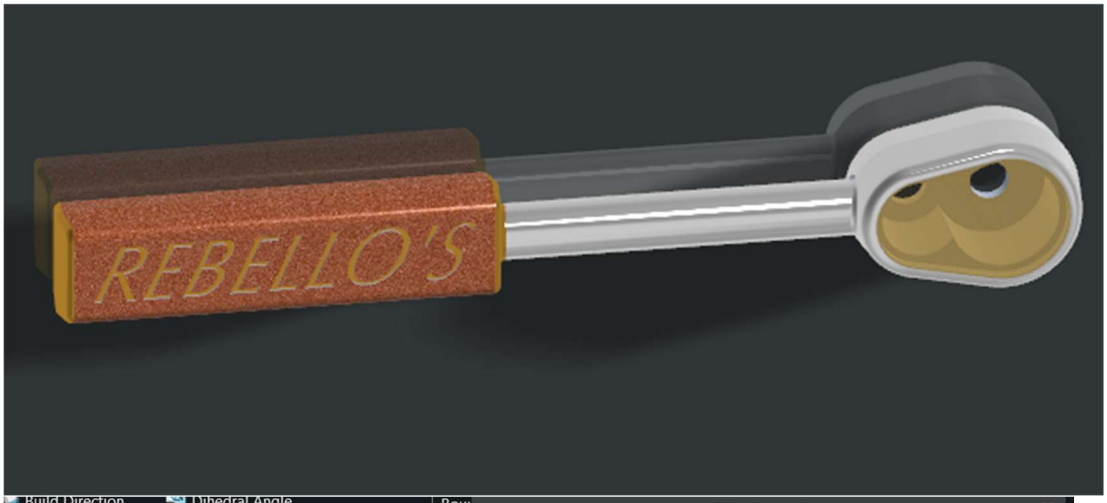
REBELLO'S

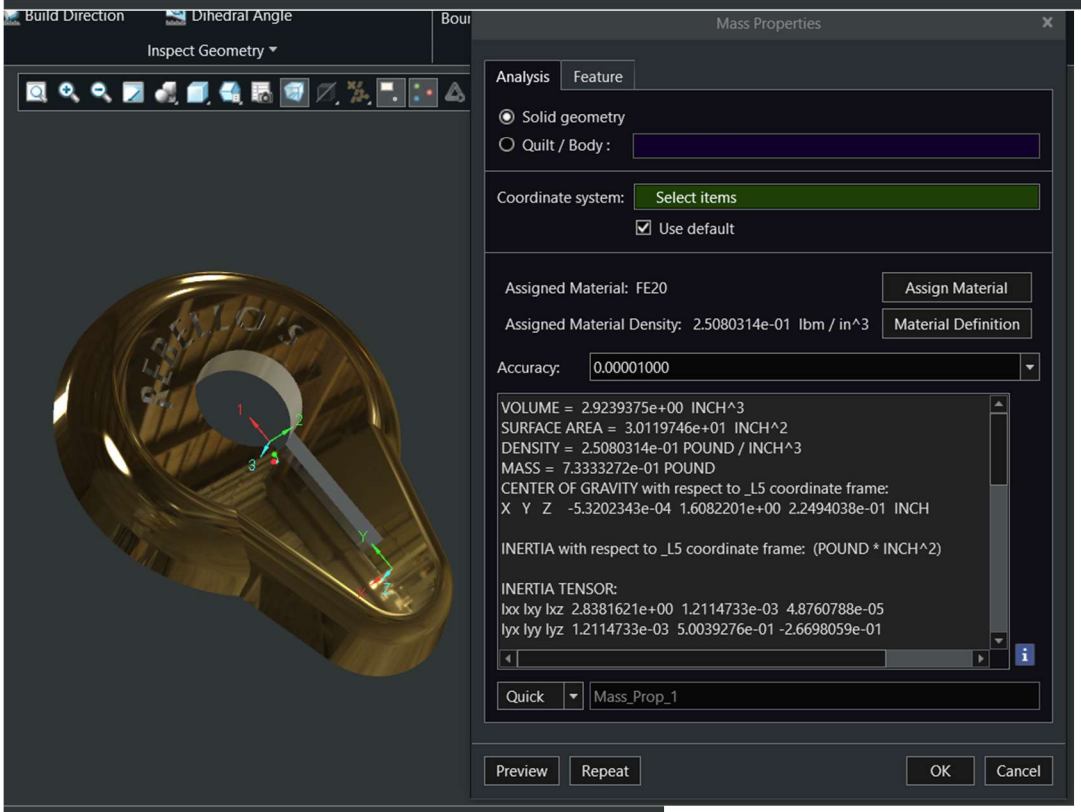
Build Direction
Dihedral Angle
Inspect Geometry
Mass Properties
Analysis
Feature
Solid geometry
Quilt / Body :
Coordinate system:
Select items
Use default
Assigned Material: FE20
Assign Material
Assigned Material Density: 2.5080314e-01 lbm / in^3
Material Definition
Accuracy:
0.00001000
VOLUME = 2.9239375e+00 INCH^3
SURFACE AREA = 3.0119746e+01 INCH^2
DENSITY = 2.5080314e-01 POUND / INCH^3
MASS = 7.3333272e-01 POUND
CENTER OF GRAVITY with respect to _L5 coordinate frame:
X Y Z -5.3202343e-04 1.6082201e+00 2.2494038e-01 INCH
INERTIA with respect to _L5 coordinate frame: (POUND * INCH^2)
INERTIA TENSOR:
Ixx Ixy Ixz 2.8381621e+00 1.2114733e-03 4.8760788e-05
Iyx Iyy Iyz 1.2114733e-03 5.0039276e-01 -2.6698059e-01
Quick
Mass_Prop_1
Preview
Repeat
OK
Cancel

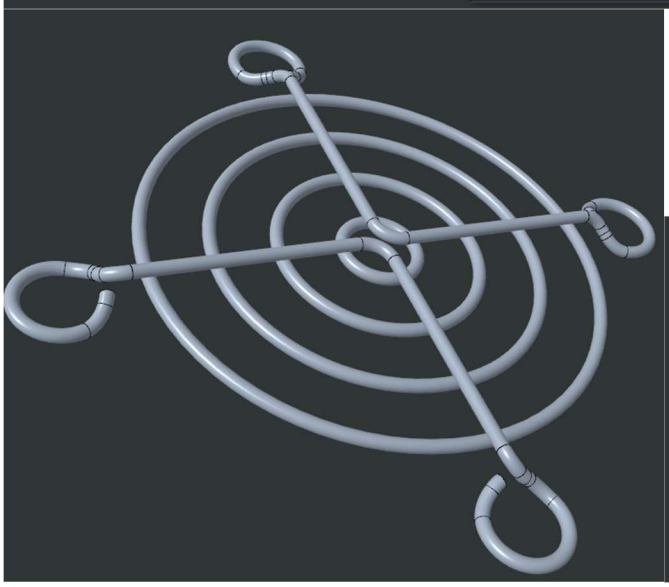

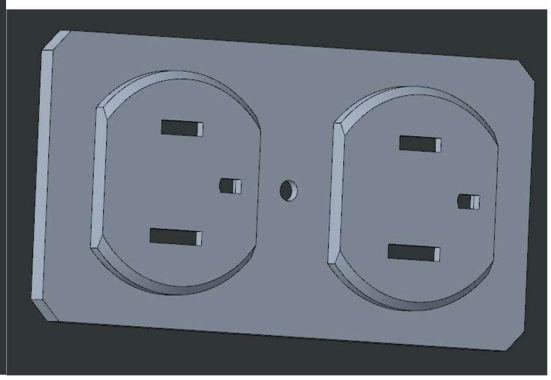

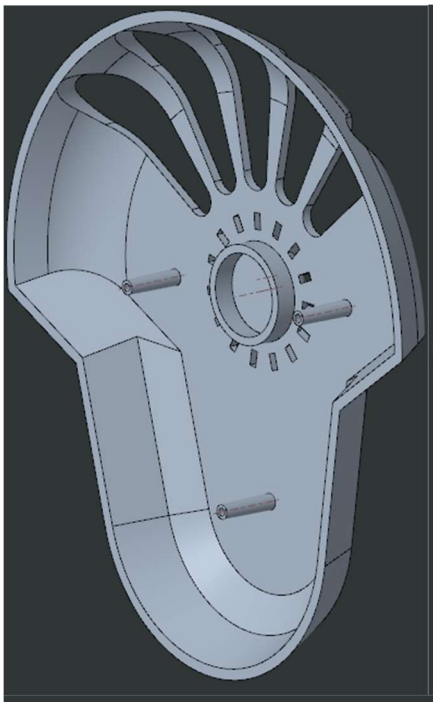

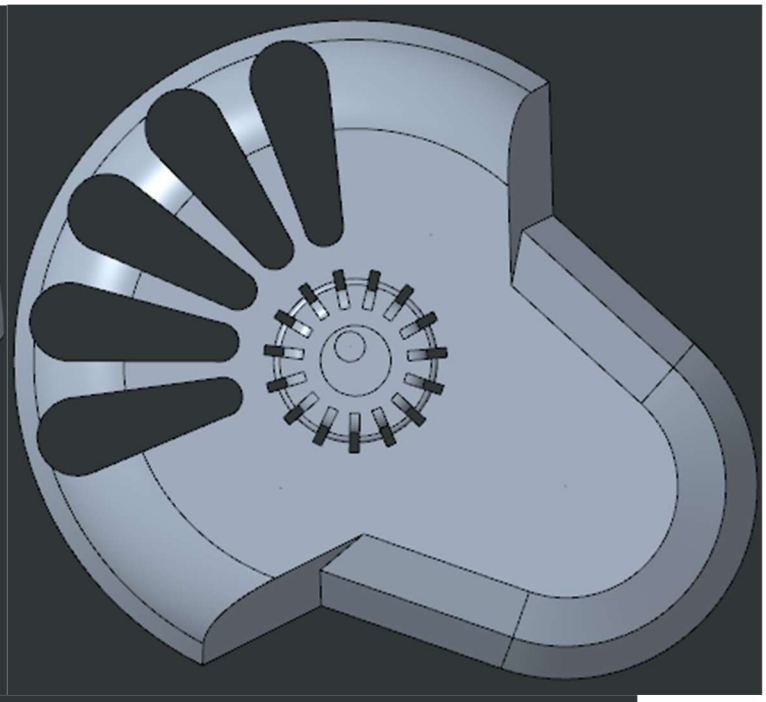

Asm-

1. knuckle joint

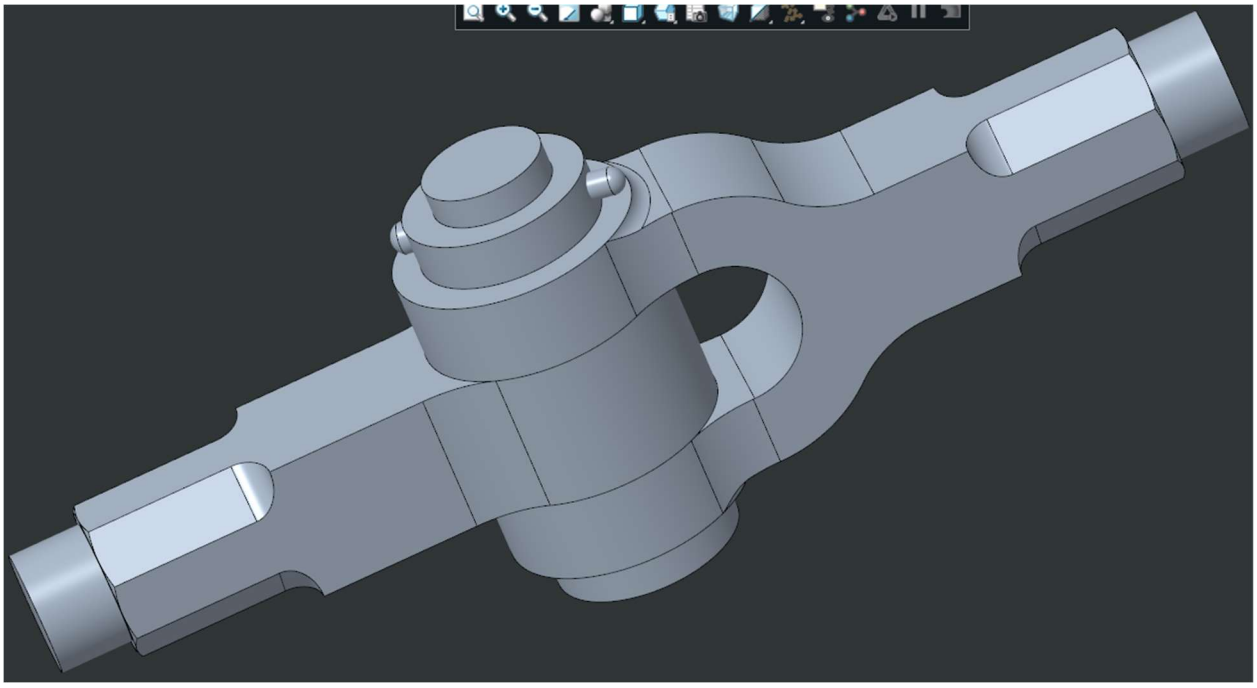

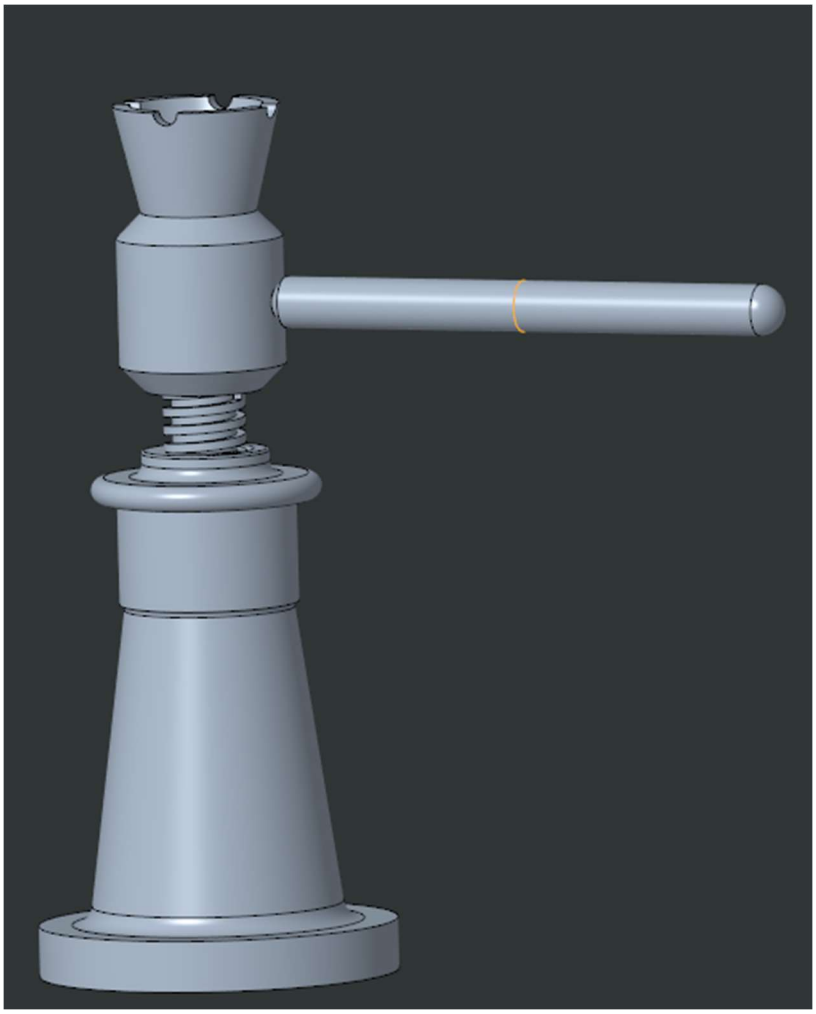

SCREW JACK ASSEMBLY

DRAWING

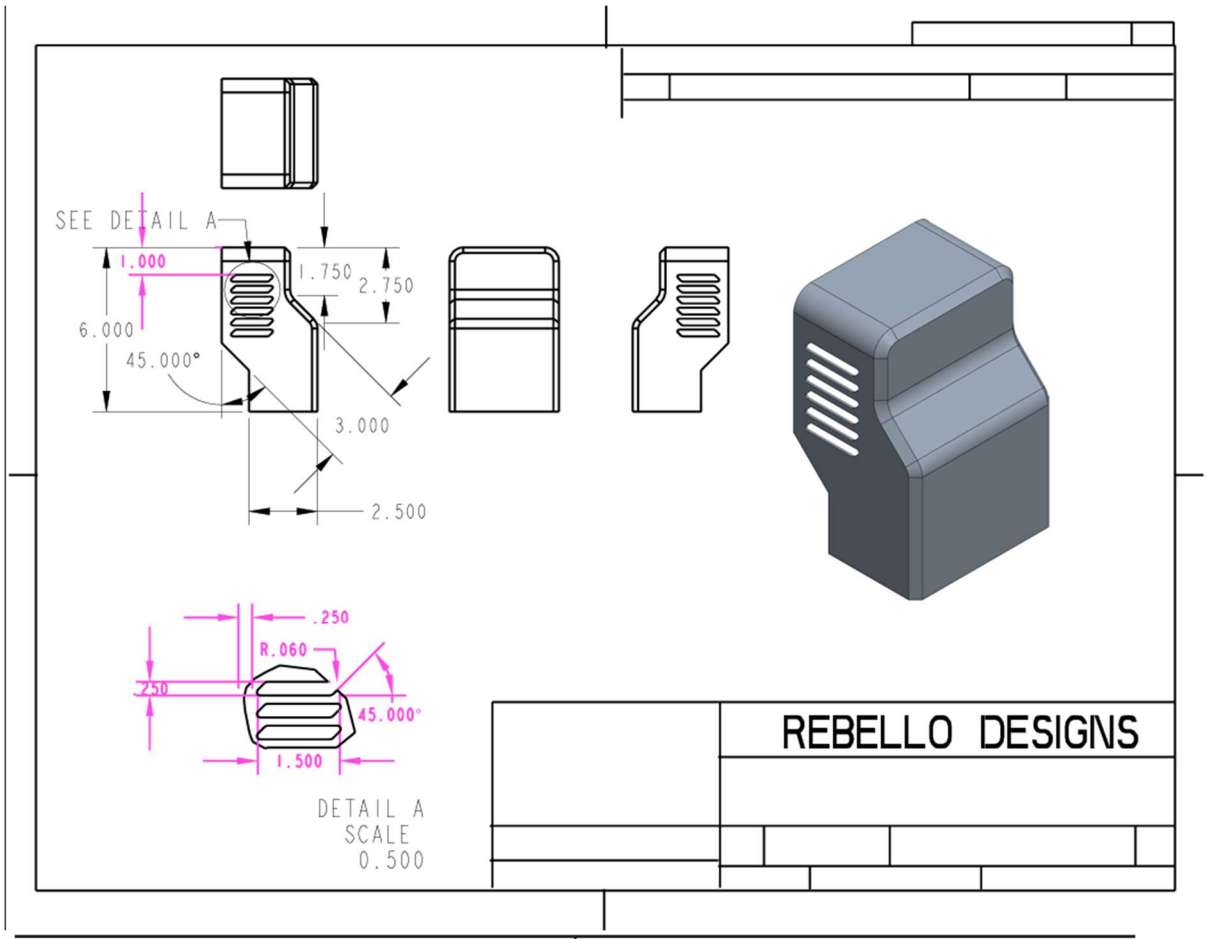
SEE DETAIL A
1.000
1.750
2.750
6.000
45.000°
3.000
2.500
.250
R.060
.250
45.000°
1.500
DETAIL A
SCALE
0.500
REBELLO DESIGNS

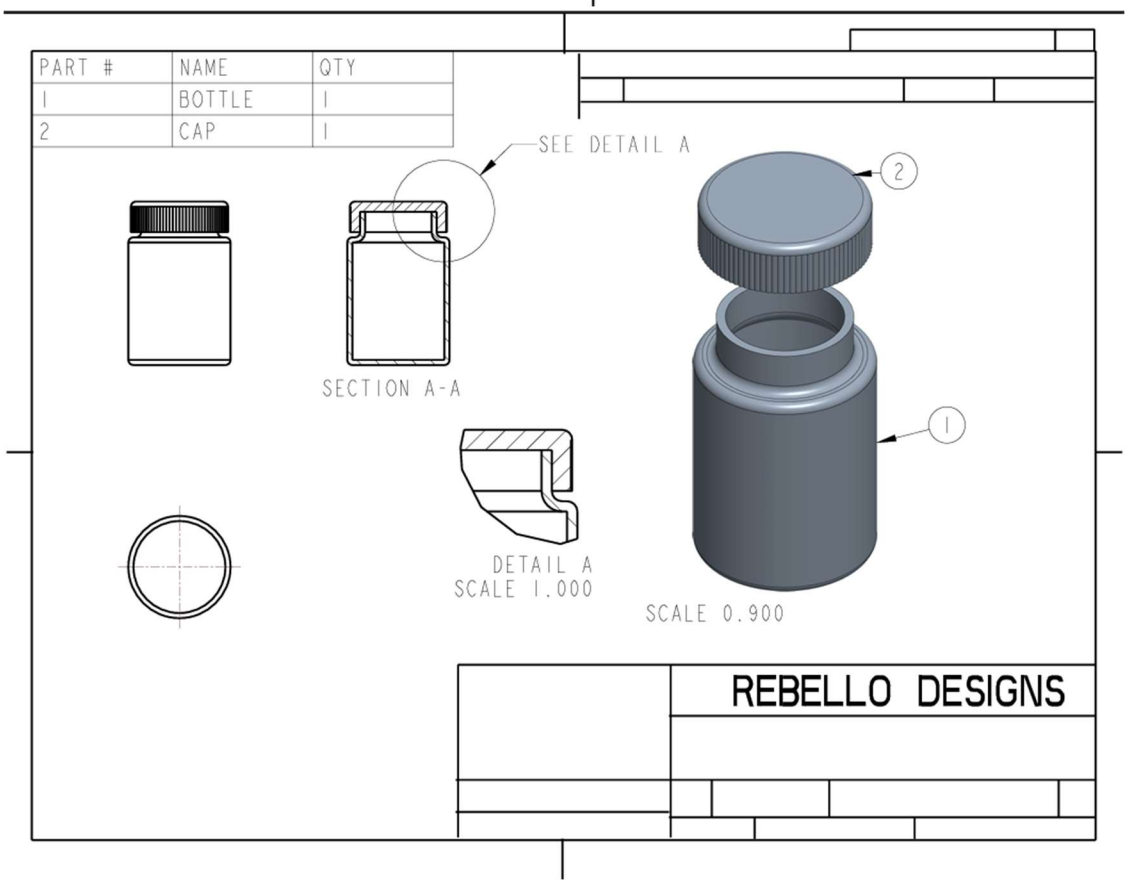
PART # | NAME | QTY
1 | BOTTLE | 1
2 | CAP | 1
SEE DETAIL A
SECTION A-A
2
1
DETAIL A
SCALE 1.000
SCALE 0.900
REBELLO DESIGNS

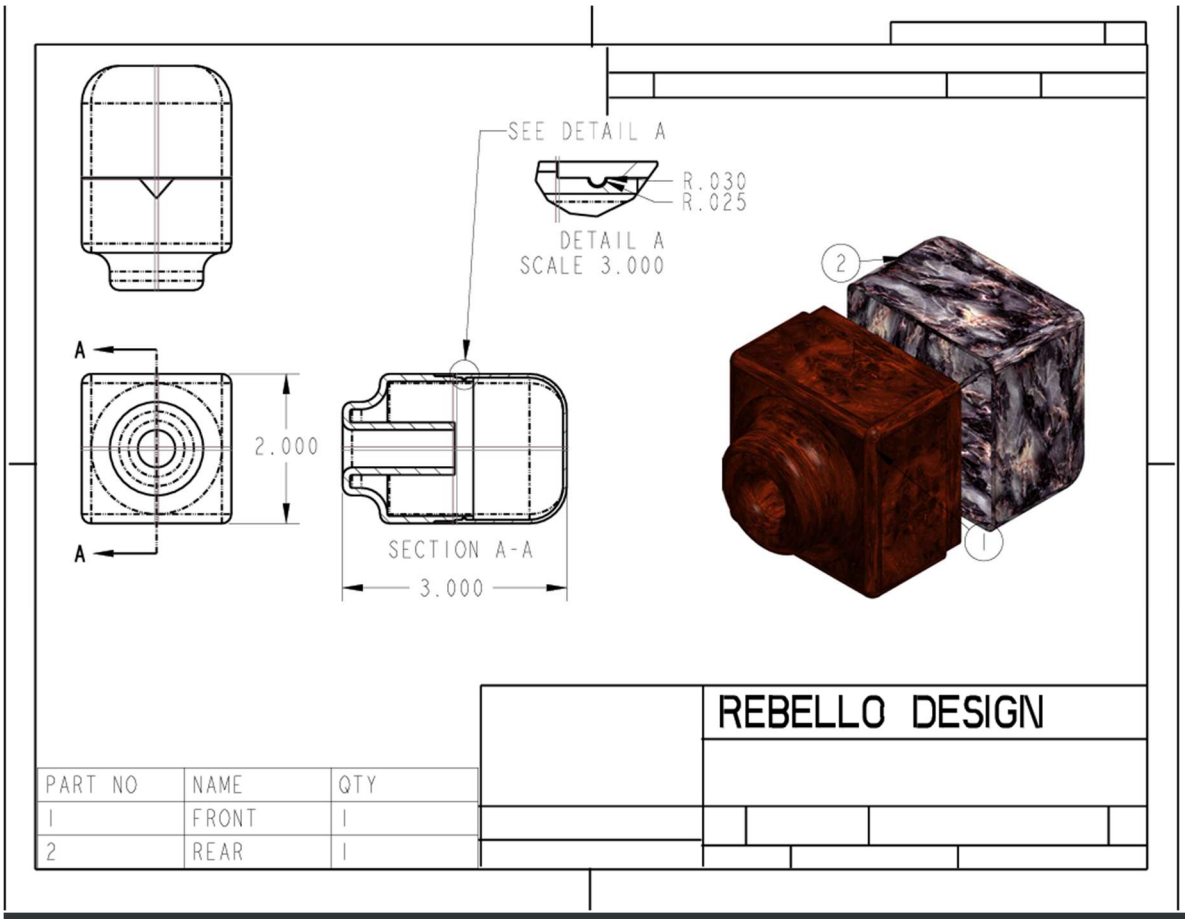
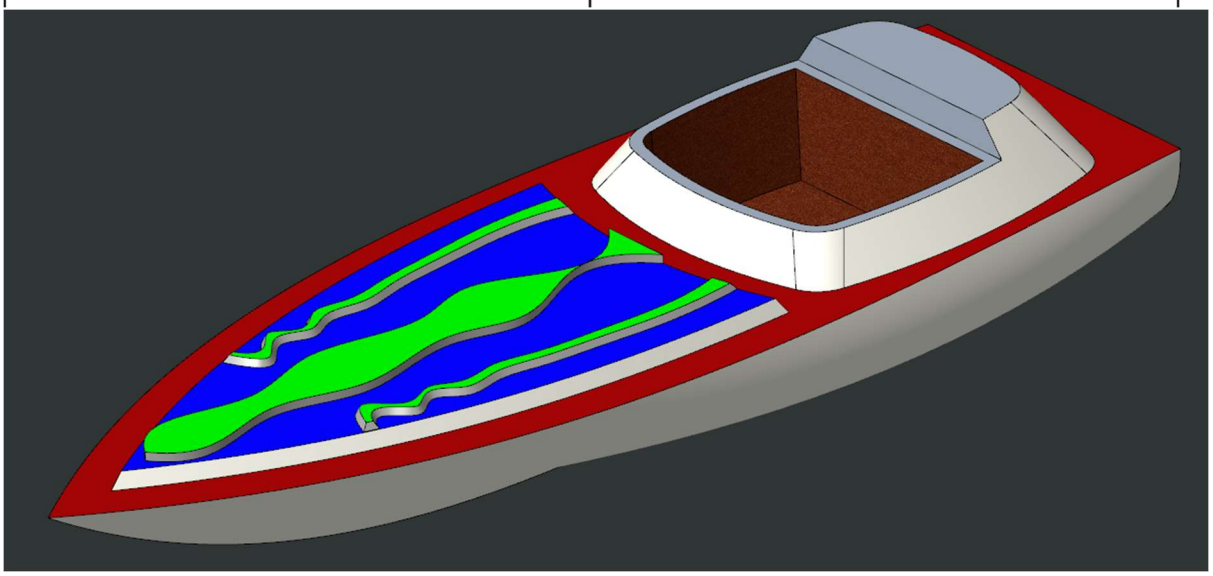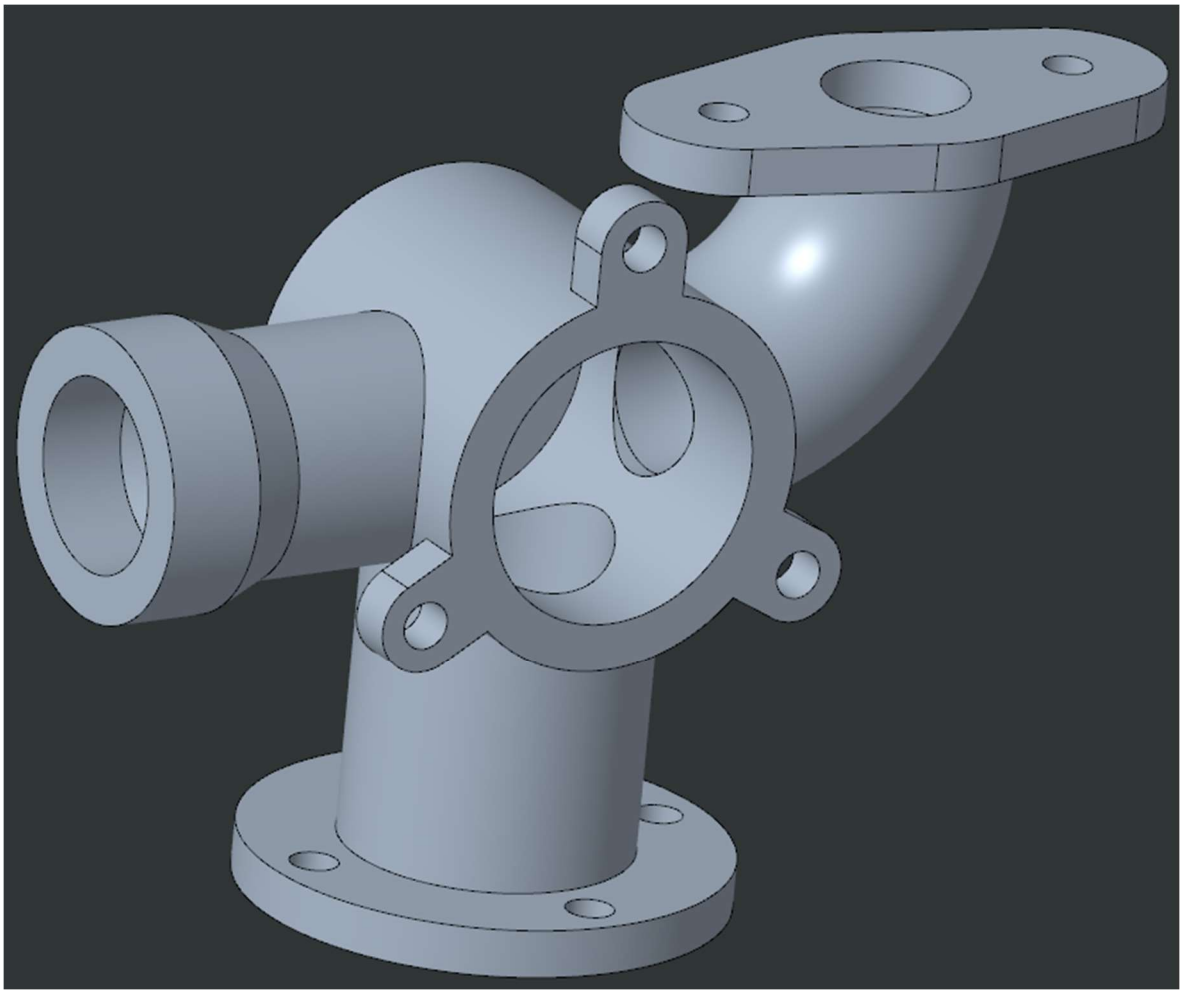
PART NO	NAME	QTY
1	FRONT	1
2	REAR	1