Proof of Simulink + Matlab (plots)

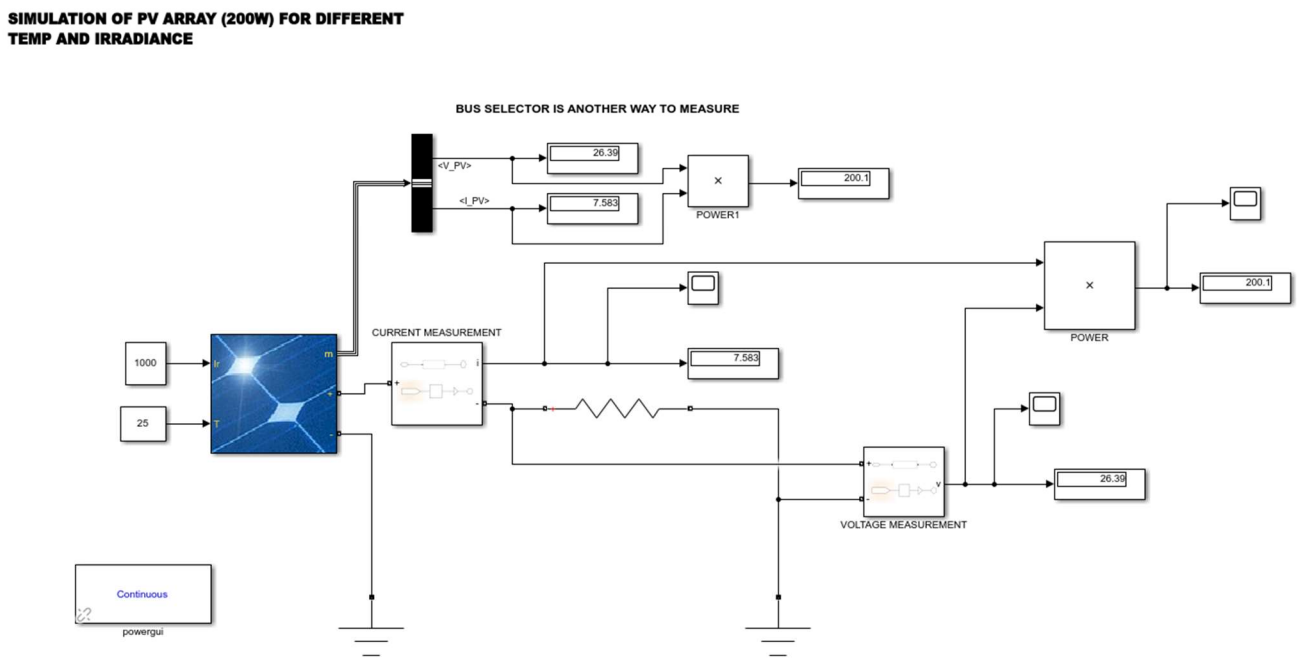

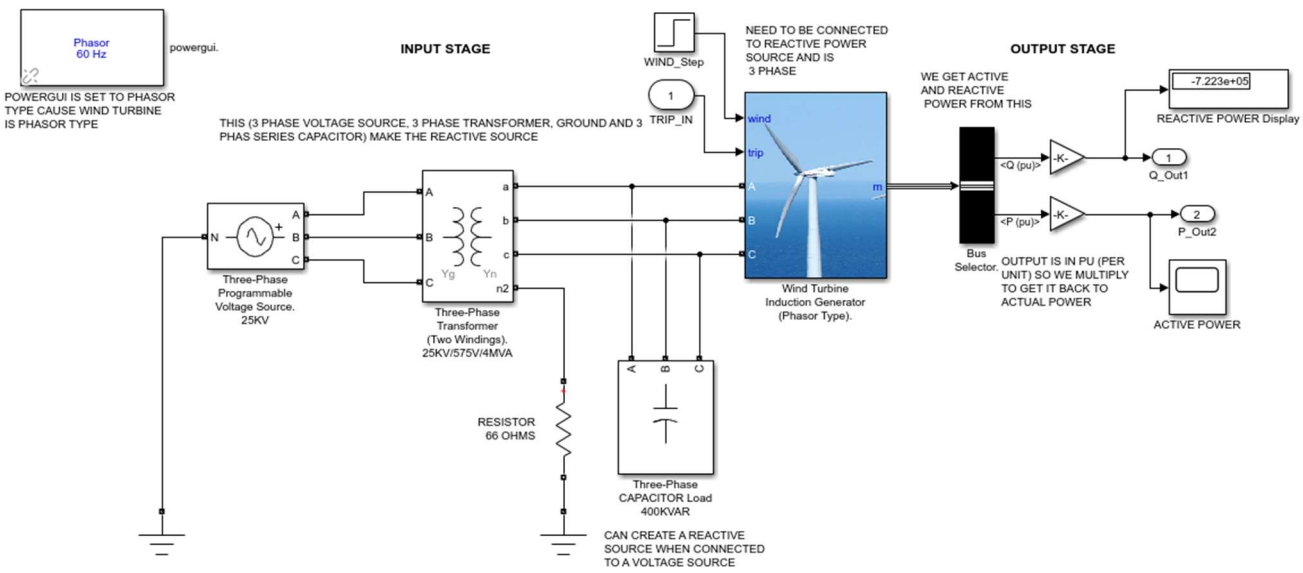

CHARGING

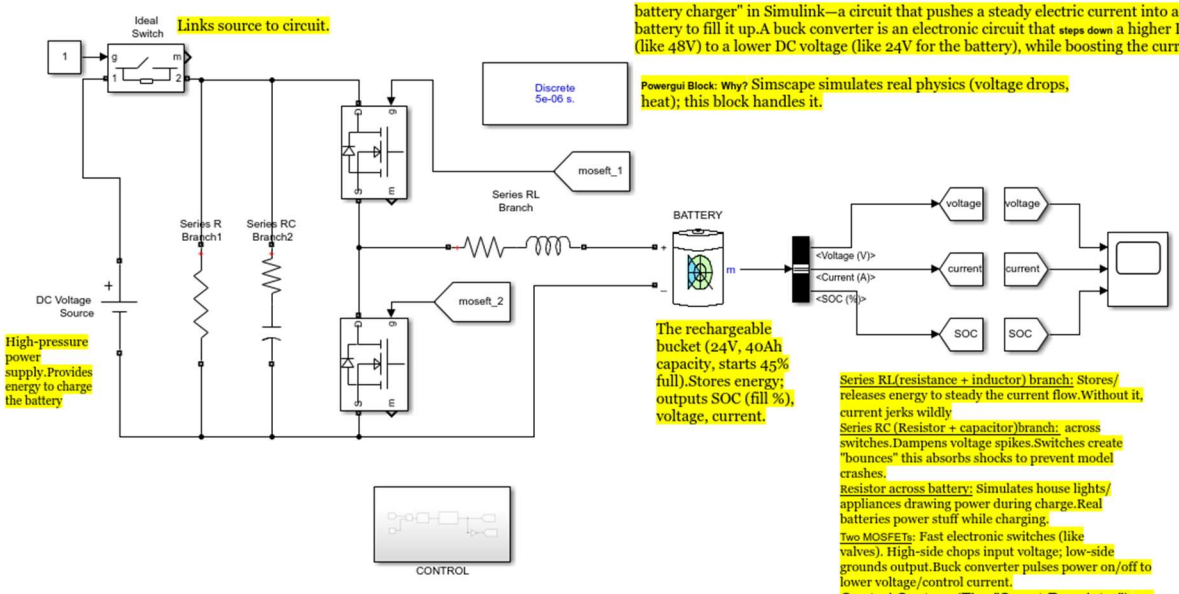

Links source to circuit.

battery charger" in Simulink—a circuit that pushes a steady electric current into an empty-ish battery to fill it up.A buck converter is an electronic circuit that **steps down** a higher DC voltage (like 48V) to a lower DC voltage (like 24V for the battery), while boosting the current.

Powergui Block: Why? Simscape simulates real physics (voltage drops, heat); this block handles it.

High-pressure power supply.Provides energy to charge the battery

The rechargeable bucket (24V, 40Ah capacity, starts 45% full).Stores energy; outputs SOC (fill %), voltage, current.

Series RL(resistance + inductor) branch: Stores/ releases energy to steady the current flow.Without it, current jerks wildly

Series RC (Resistor + capacitor)branch: across switches.Dampens voltage spikes.Switches create "bounces" this absorbs shocks to prevent model crashes.

Resistor across battery: Simulates house lights/ appliances drawing power during charge.Real batteries power stuff while charging.

Two MOSFETs: Fast electronic switches (like valves). High-side chops input voltage; low-side grounds output.Buck converter pulses power on/off to lower voltage/control current.

Control System (The "Smart Regulator"):**Bus Selector + Goto/From Tags:** Splits battery signals (SOC, Ibat, Vbat); cleans wiring.Grabs current measurement. Battery block bundles data; we need just current for feedback.

Fault Analysis of 3 phase System in Simulink

simulating short-circuits (faults) on a three-phase power system in Simulink, then seeing how the currents and voltages behave.

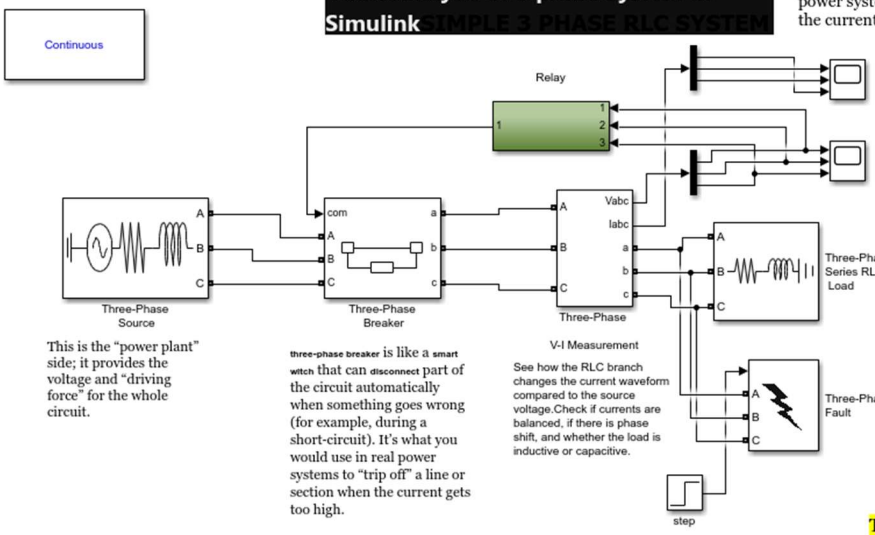

Demux:Take the 3-phase measurements of I and V and break them into individual phase signals so the relay can look at a single current or voltage.

Relay : Watch the measured current or voltage and send a trip signal when it becomes too large (fault condition).

This is the "power plant" side; it provides the voltage and "driving force" for the whole circuit.

three-phase breaker is like a **smart witch** that can **disconnect** part of the circuit automatically when something goes wrong (for example, during a short-circuit). It's what you would use in real power systems to "trip off" a line or section when the current gets too high.

V-I Measurement

See how the RLC branch changes the current waveform compared to the source voltage.Check if currents are balanced, if there is phase shift, and whether the load is inductive or capacitive.

The **series RLC load** in this fault-analysis model is there to **represent a realistic "consumer" of ower** connected to the line, so the system behaves like a real grid instead of just a source and a fault.

Three-Phase Fault block is a "switchable hort-circuit" that you can turn on and off at chosen times.It sits in the line and, when **active**, it creates a **short-circuit**

So the Step block is like a **remote ontrol** that decides: **At what time** the fault starts

The model doesn't just "fault happens" but "**fault happens → current rises → relay detects it → protection can act**"

- **R (resistor)** → real power consumption (like heaters, resistive losses).
- **L (inductor)** → stores energy in magnetic field, "slows down" current changes; typical in motors, transformers, and cables.
- **C (capacitor)** → stores energy in electric field, "speeds up" current changes; typical in filters, power-factor-correction banks, and some electronic loads.

❖A three phase, 60 Hz, 500 kV transmission line is 300 km long. The line inductance is 0.97 mH/km per phase and its capacitance is 0.0115 μF/km per phase. Assume a lossless line.

❖The receiving end rated load is 800 MW, 0.8 power factor lagging at 500 kV.

LONG TRANSMISSION LINE MODEL

❖Determine the Sending end voltage, current, active, reactive and apparent power.

❖Determine the percentage voltage regulation as well as efficiency of the transmission line.

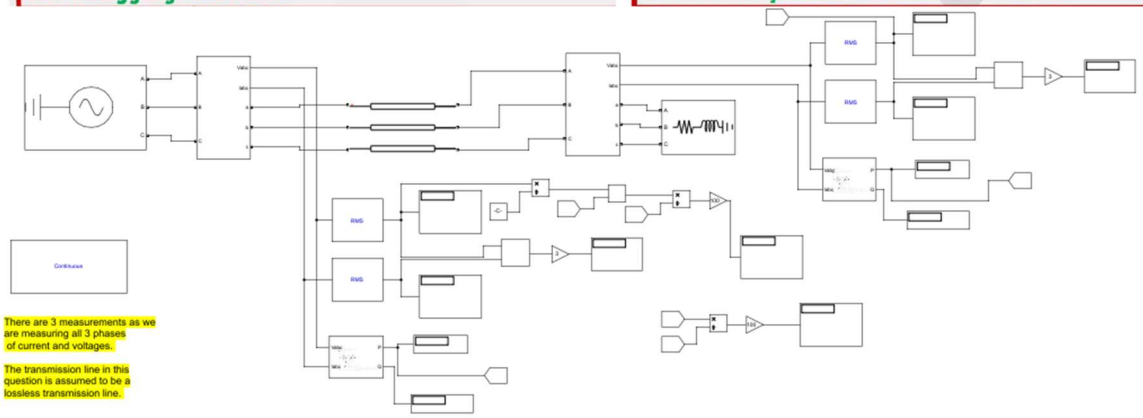

There are 3 measurements as we are measuring all 3 phases of current and voltages.

The transmission line in this question is assumed to be a lossless transmission line.

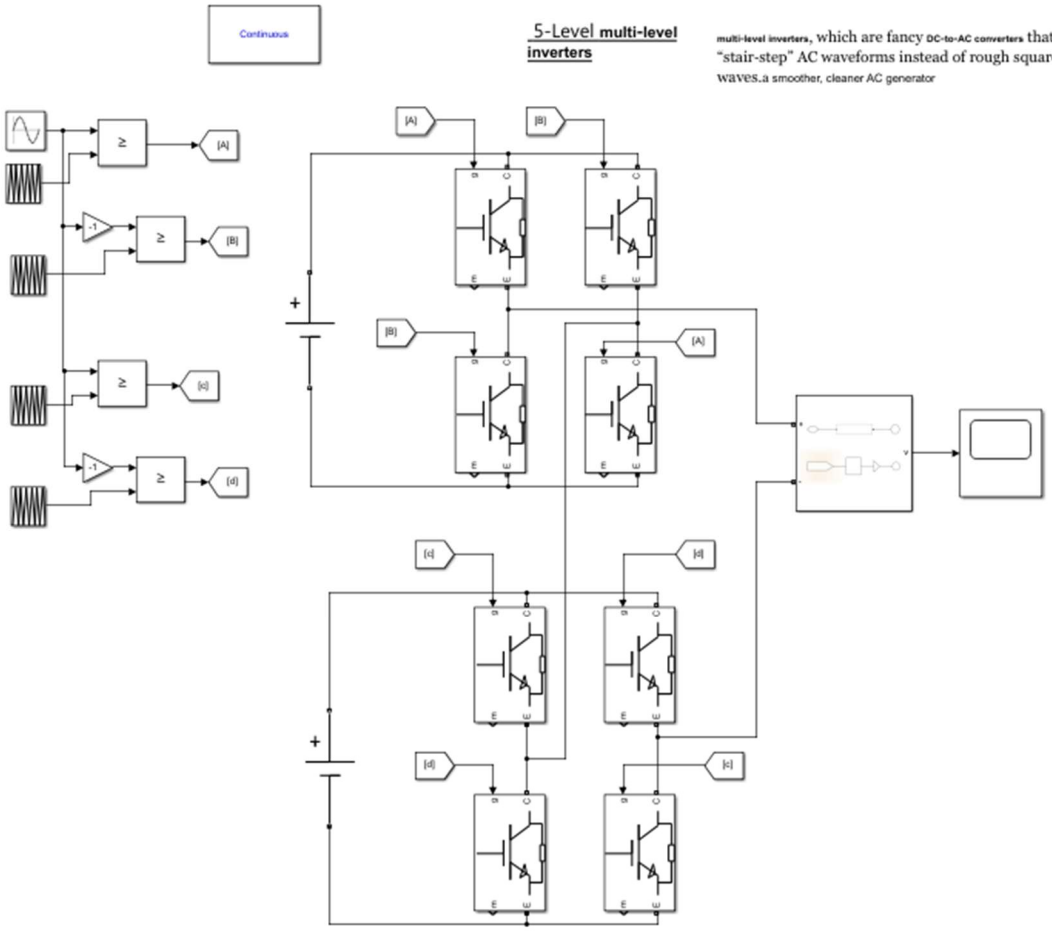

5-Level multi-level inverters

multi-level inverters, which are fancy DC-to-AC converters that make "stair-step" AC waveforms instead of rough square waves.a smoother, cleaner AC generator

--We use the **three inductors** because the inverter output is not perfectly smooth, and the inductors help make the three-phase current smoother and leaner before it goes to the grid or load.

PV TO GRID

--Because this is a **grid-connected** PV system, the **three-phase source** represents the **electrical grid.** The **second Three-Phase V-I Measurement** is there to measure what the voltage and current look like **after the inductors, near the grid side**.

--We use **PID** to make the system **follow the desired value** and correct errors automatically.

--We use **Mux** to **combine multiple signals into one line** so they can be sent together to another block or scope.

--The **PLL block** is used so the inverter can **match the grid** correctly. PLL means **Phase-Locked Loop**, and its job is to detect the grid **phase** and **frequency**.

-- DQ0 block: it turns a changing AC waveform into signals that look more **steady**, so the controller can work better.

--Example::: DQ0 output = d_0, q_0, 0. Demux splits them into separate lines. Maybe the model only wants d and q_0. Then a Mux combines just d and q into one new signal.

--Because the controller works more easily in **dq0**, but the inverter and PWM block need **three-phase abc signals**.

--

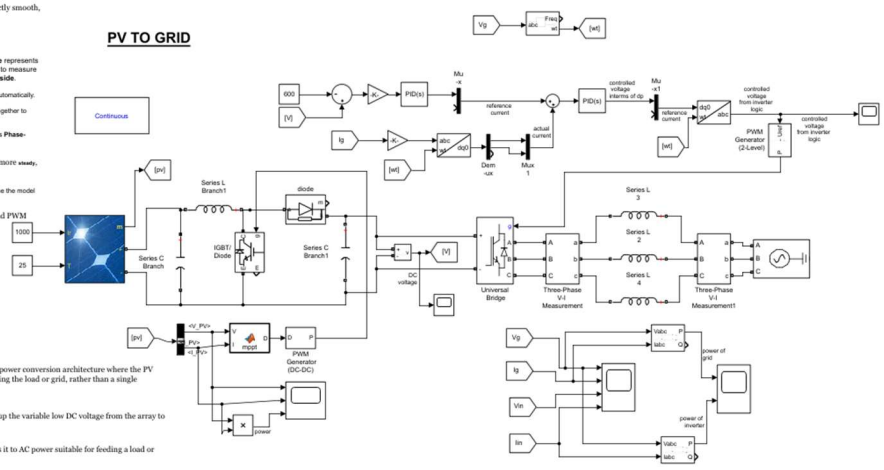

--A **double-stage (or two-stage) conversion** in a PV Simulink model refers to a power conversion architecture where the PV array's output passes through **two sequential conversion stages** before reaching the load or grid, rather than a single converter doing everything at once.

--Stage 1 -- DC-DC Conversion (Boost Converter):
The PV array first feeds into a DC-DC boost converter, which steps up the variable low DC voltage from the array to a stable, higher DC bus voltage

--Stage 2 -- DC-AC Conversion (Inverter):
The regulated DC bus voltage then feeds an inverter, which converts it to AC power suitable for feeding a load or synchronizing with the utility grid.

--A capacitor stores electrical energy in an electric field, and in PV systems it is often placed on the DC side to **reduce voltage ripple** and help keep the voltage more stable when the converter or inverter draws pulsed current.

--An inductor stores energy in a magnetic field, and a series inductor resists sudden changes in current, so it helps make the current from the PV array **change more gradually instead of in sharp spikes.**

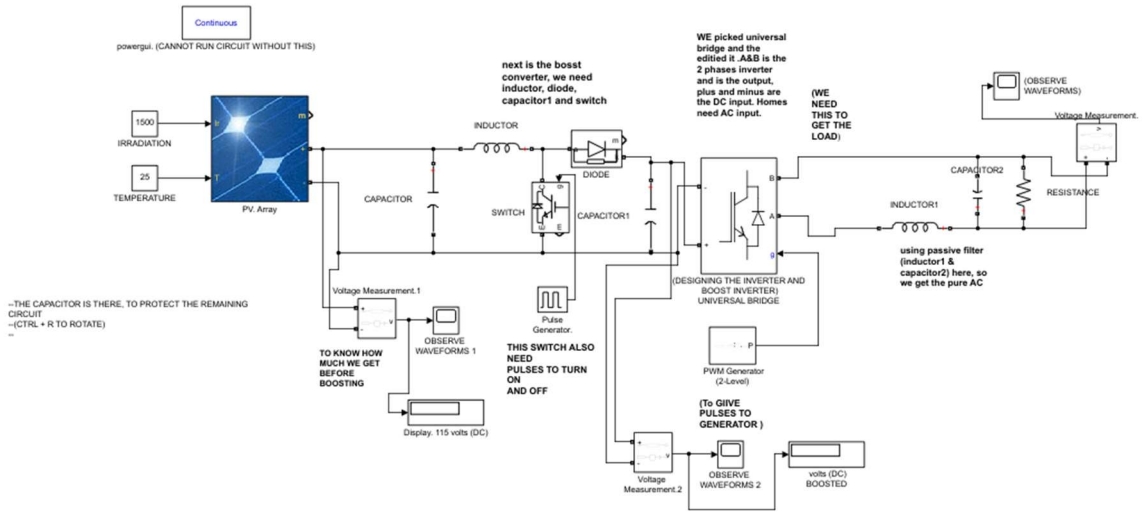

Dynamic Simulation of Biogas Storage Pressure Control in MATLAB/Simulink

This model simulates biogas tank pressure control where a PI controller adjusts outlet flow to maintain pressure under changing inflow disturbance.

- **Step**: creates a sudden inflow disturbance.
- **Transport Delay**: delays the disturbance before it reaches the tank.
- **Inflow Gain**: scales disturbance into actual inflow.
- **Lower Sum**: computes net flow = inflow - outflow.
- **Integrator**: turns net flow over time into tank pressure.
- **Constant**: sets the desired pressure target.
- **Upper Sum**: computes control error for the controller.
- **PI Controller**: decides how much valve action is needed.
- **Saturation**: limits valve command to safe bounds.
- **Outflow Gain**: converts controller output into outlet flow.
- **Scope**: displays the signals over time.
- **Slider**: changes the setpoint interactively during simulation.
- **Biogas Production Dynamics** — Represents the gradual response of biogas generation to a change in biomass feed instead of an instantaneous change.
- **Useful methane flow** — Calculates the methane-rich usable portion of the delayed biogas flow by multiplying total biogas flow by methane fraction.

biogas comes in, the tank pressure changes, and a PI controller opens or closes the outlet valve to keep the pressure near the target value you set. It is not a full biochemical digestion model; it is a simplified control-system model made to show disturbance, delay, feedback, and tuning in Simulink.The setpoint is just the pressure you want, the actual pressure is what the tank currently has, and the controller uses the difference between them to decide what to do next.

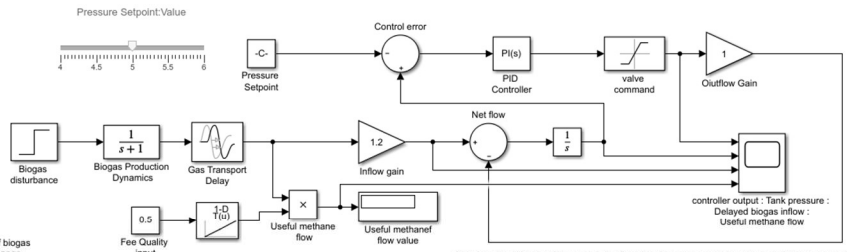

Start from the left side of the model: the **Step block** creates a sudden change in biogas generation, which means you are deliberately disturbing the system to see how it reacts. Then the **Gas Transport Delay** block delays that change, meaning the inflow does not affect the tank immediately but only after some time lag.

After that, the **Inflow Gain** block scales the disturbance into the actual inflow size that enters the tank, and the **lower Sum block** calculates net flow as inflow minus outflow. The **Integrator** then accumulates that net flow over time, and in this simplified model its output is treated as the **tank pressure**.

At the top, the **Constant block** gives the desired pressure setpoint, and the **upper Sum block** creates the control error, which is the signal telling the controller how far the system is from the target. The **PI controller** takes that error and creates a control action, meaning it decides how much the outlet valve should respond to bring pressure back toward the setpoint.

The **Saturation block** limits that controller output so the valve command stays within a realistic range, and the **Outflow Gain** turns that valve command into the outflow leaving the tank. That outflow goes back to the lower Sum block, so if the controller increases outflow, the tank pressure stops rising as much or starts dropping, which is how the system regulates itself.

the **bottom plot** is the delayed inflow disturbance, so it shows when the inflow changes and how the transport delay shifts that change to a later time. The **middle plot** is the tank pressure, so this is the main result showing how pressure rises, overshoots a bit, and then settles back near the target value. The **top plot** is the controller output or valve command, which shows how strongly the controller reacts when the disturbance happens or when the setpoint changes.

If you change the Feed Quality input constant, the output of the lookup table will also change, because a lookup table maps input values to output values based on the breakpoints and table data you entered.

Avr:

DESIGNING AUTOMATIC VOLTAGE REGULATOR (AVR) OF THERMAL/HYDRO PLANT USING TRANSFER FUNCTIONS.

PID Needs the correct proportional, integral and derivative gains in order to get a satisfactory response. Trial and error.

11kv is assumed as base volatge and we multiply result with the terminal gain to get the terminal voltage in volts.

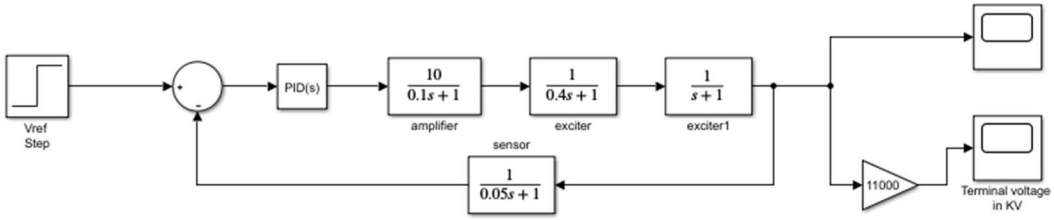

❖ Example

❖The AVR system of a generator has the following parameters:

Parameter	Gain	Time Constant
Amplifier	KA	TA = 0.1
Exciter	KE	TE = 0.4
Generator	KG	TG = 1.0
Sensor	KR	TR = 0.05

❖The amplifier gain is set to KA = 10.
❖(1) Find the steady state step response.
❖(2) Construct the Simulink block diagram and obtain the step response.

AVR model using
PID Tuner

In the blue line, we see that there was a long overshoot and it takes some tiem to settle.
Therfore we use the PID tuner to have smaller settling time and less overshoot.

After tuning we see we can choose between faster response or smaller overshoot. In real life, faster response and smaller overshoot is preffered.

We can comparte the previous output and the output after using the PID tuner using the inspector option.

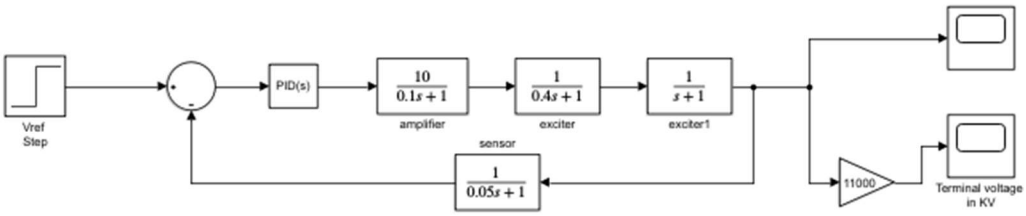

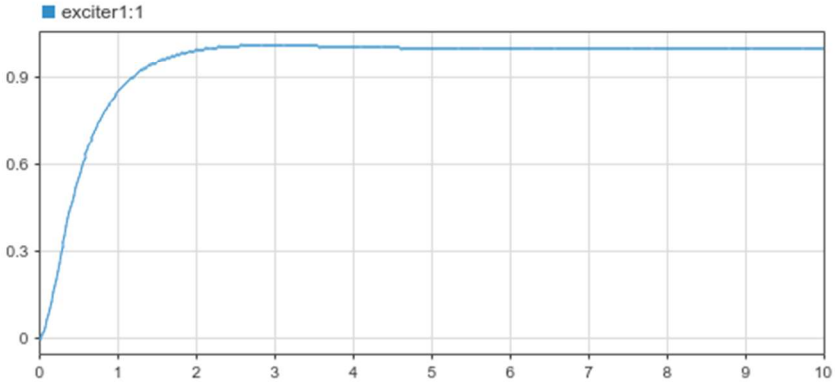

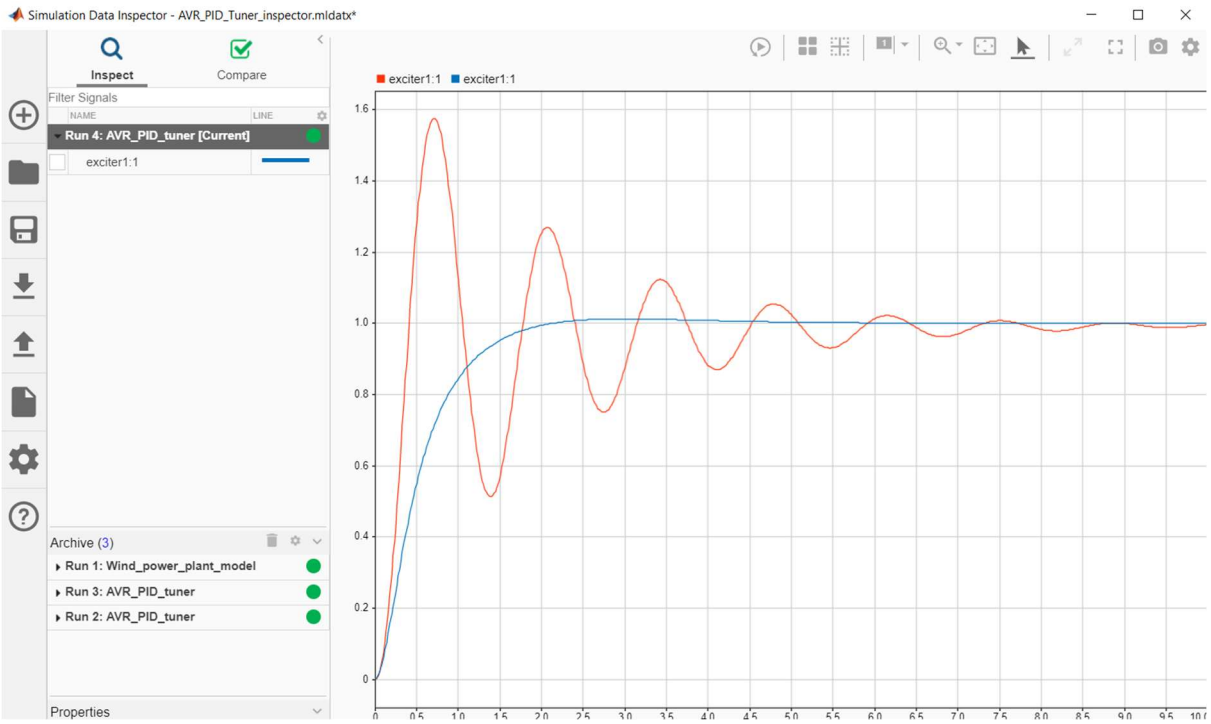

AVR USING FUZZY LOGIC

The blue line requires tiem to settle as well as a long overshoot is present as well.

To replace PID with fuzzy logic we need to the know the ranges of input and output of the PID.

!

WITH PID

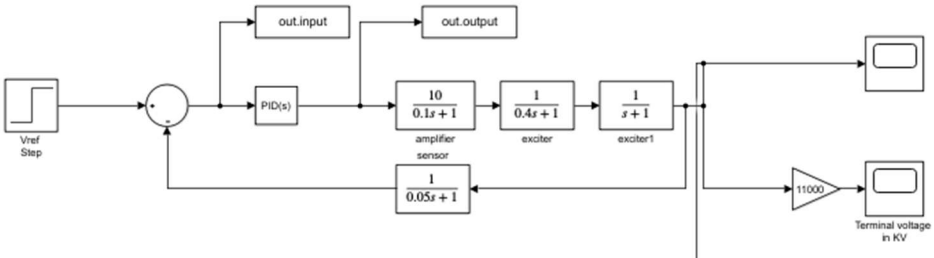

WITH FUZZY LOGIC

We type fuzzy in the command window and we get the fuzzy logic controller GUI tool box. By default it is always the mamadani method.
Initially the fuzzy logic response is extremely high (1st time, we had 50), so we neeed to reduce the range of the output. so we edit it on the fuzzy logic controller GUI tool

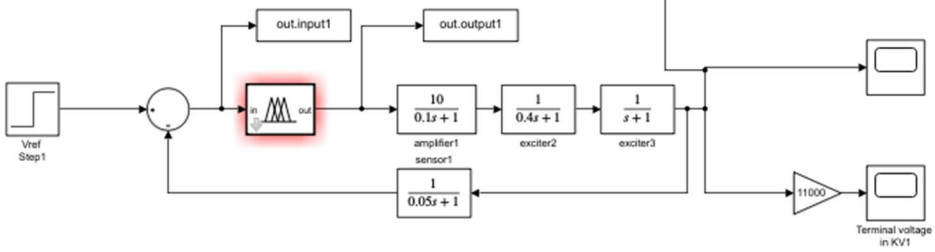

PLOTS:

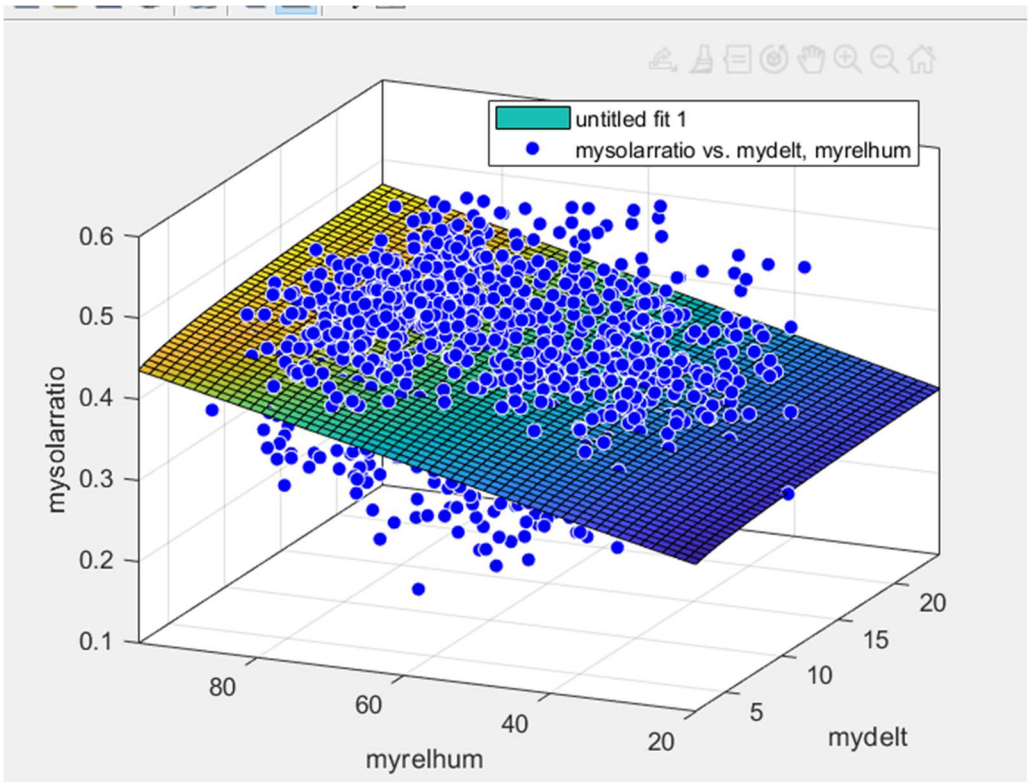
untitled fit 1
mysolarratio vs. mydelt, myrelhum
mysolarratio
0.6
0.5
0.4
0.3
0.2
0.1
80
60
40
20
myrelhum
20
15
10
5
mydelt

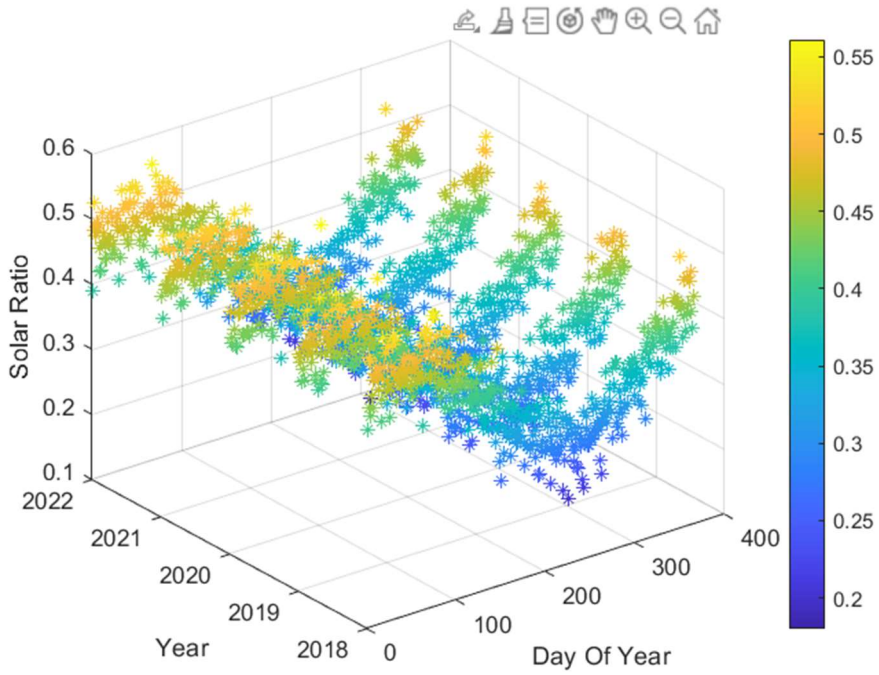
Solar Ratio
0.6
0.5
0.4
0.3
0.2
0.1
2022
2021
2020
2019
2018
Year
0
100
200
300
400
Day Of Year
0.55
0.5
0.45
0.4
0.35
0.3
0.25
0.2

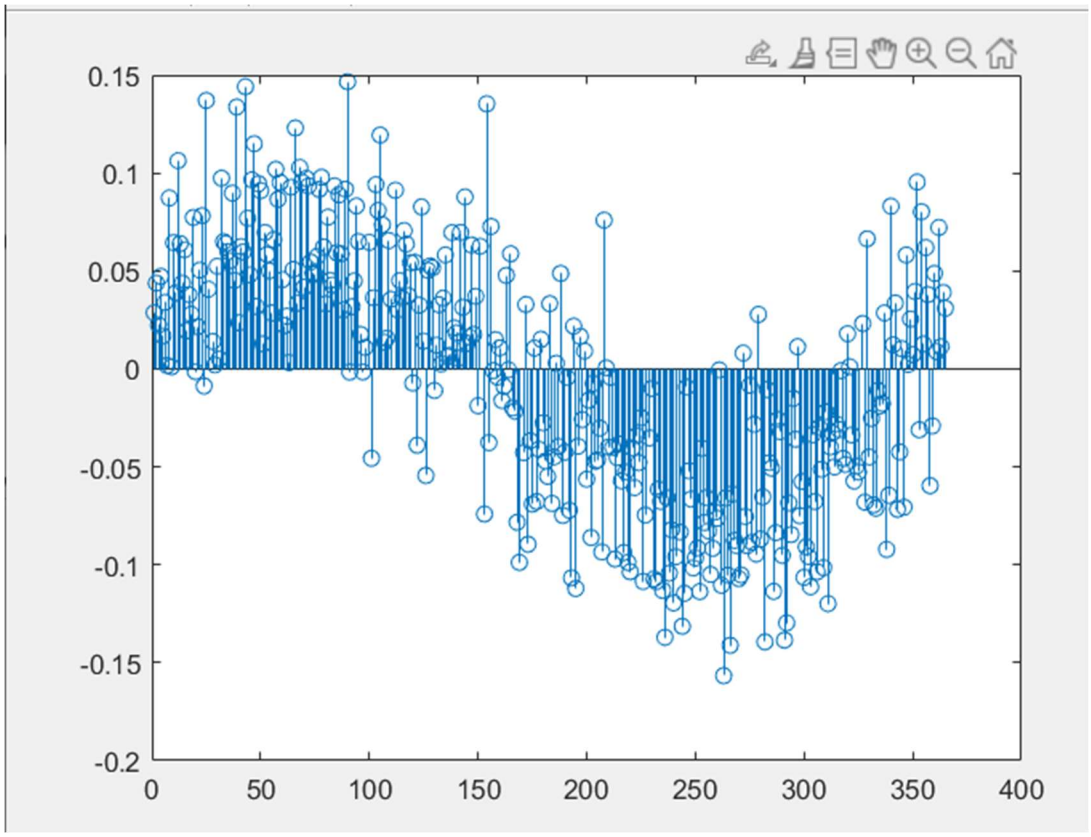
0.15
0.1
0.05
0
-0.05
-0.1
-0.15
-0.2
0
50
100
150
200
250
300
350
400

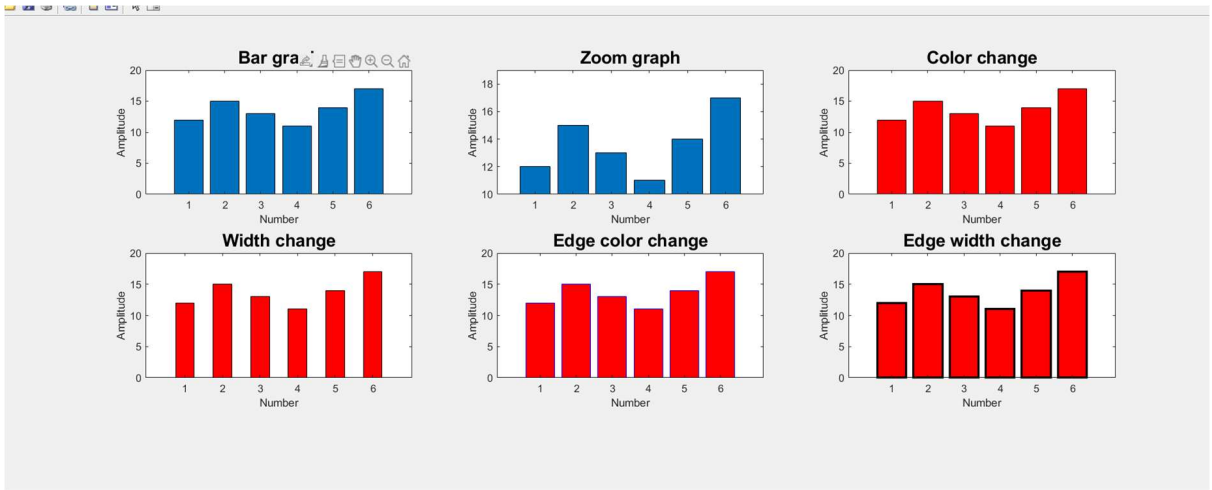
Bar gra
Zoom graph
Color change
Width change
Edge color change
Edge width change
Amplitude
Number

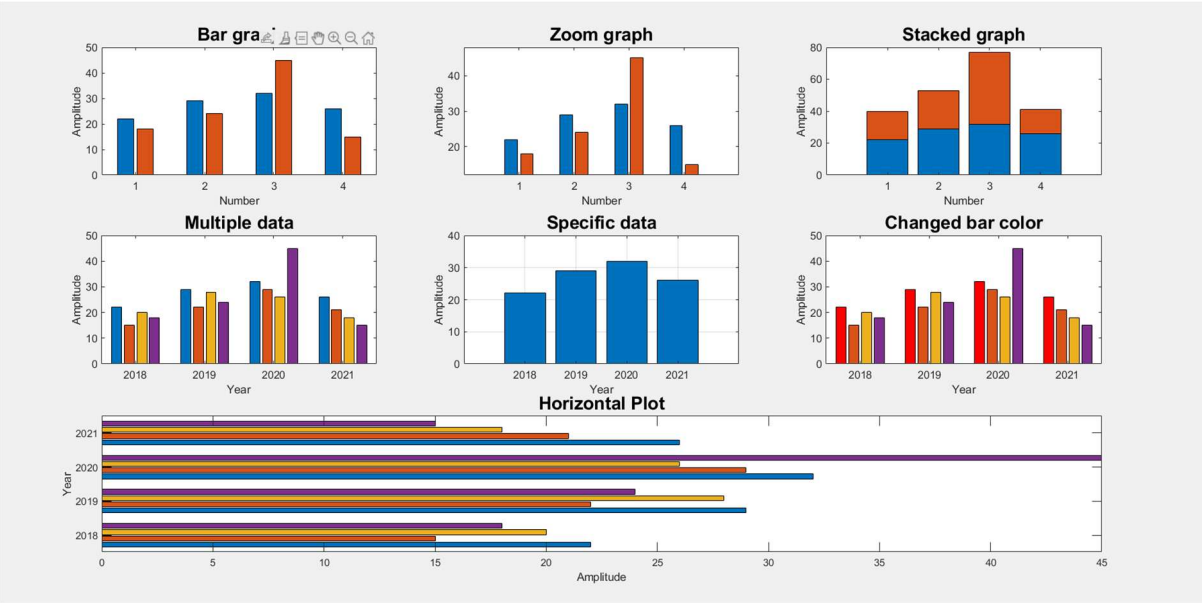
Bar gra
Zoom graph
Stacked graph
Multiple data
Specific data
Changed bar color
Horizontal Plot
Amplitude
Number
Year
2018
2019
2020
2021

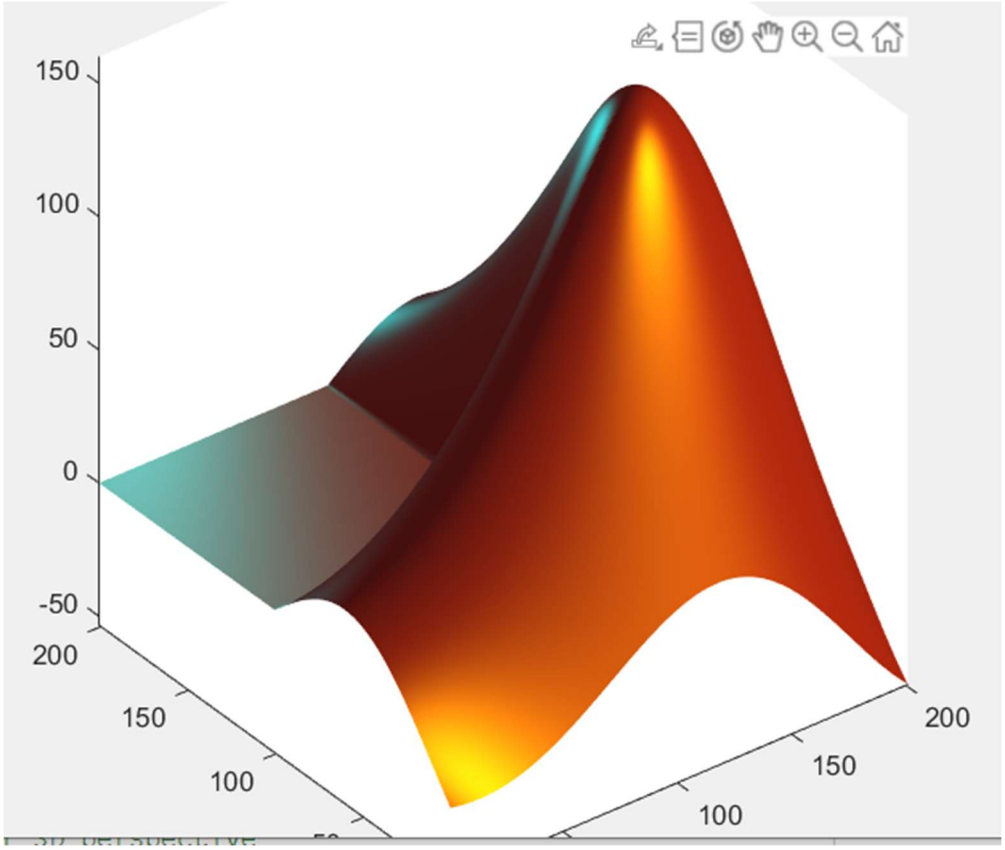
150
100
50
0
-50
200
150
100
200
150
100

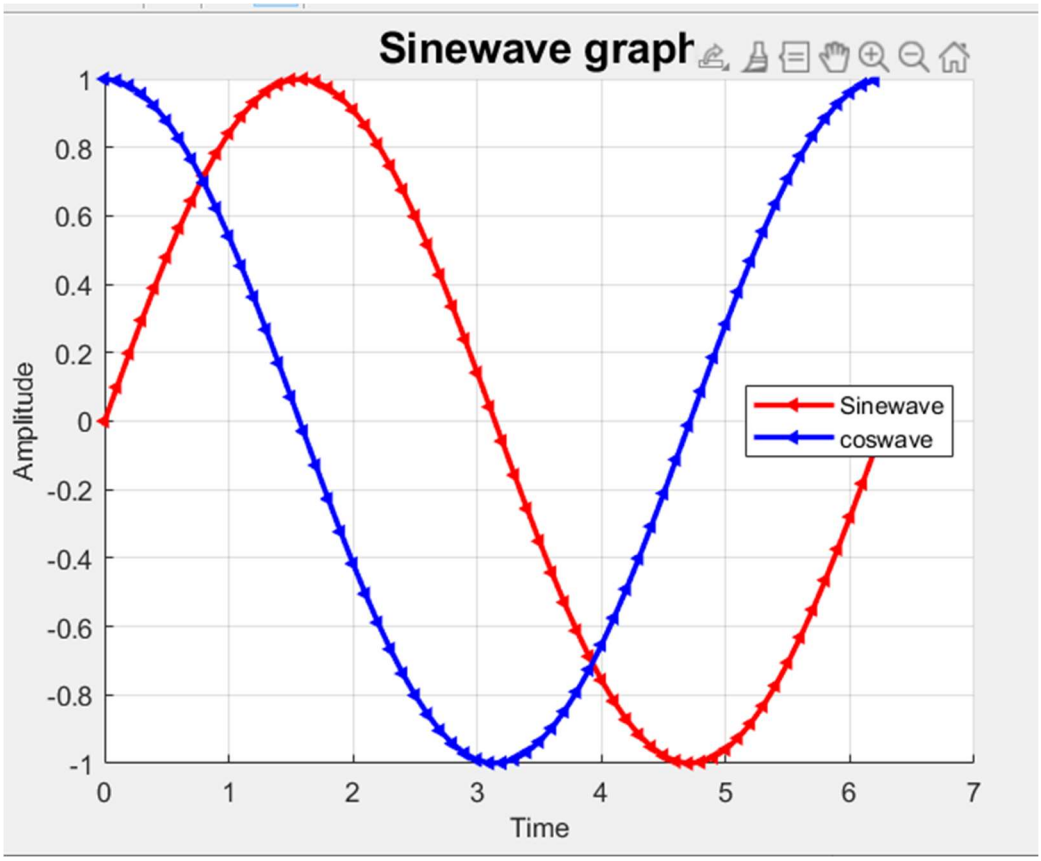
Sinewave graph
Amplitude
Time
Sinewave
coswave
1
0.8
0.6
0.4
0.2
0
-0.2
-0.4
-0.6
-0.8
-1
0
1
2
3
4
5
6
7

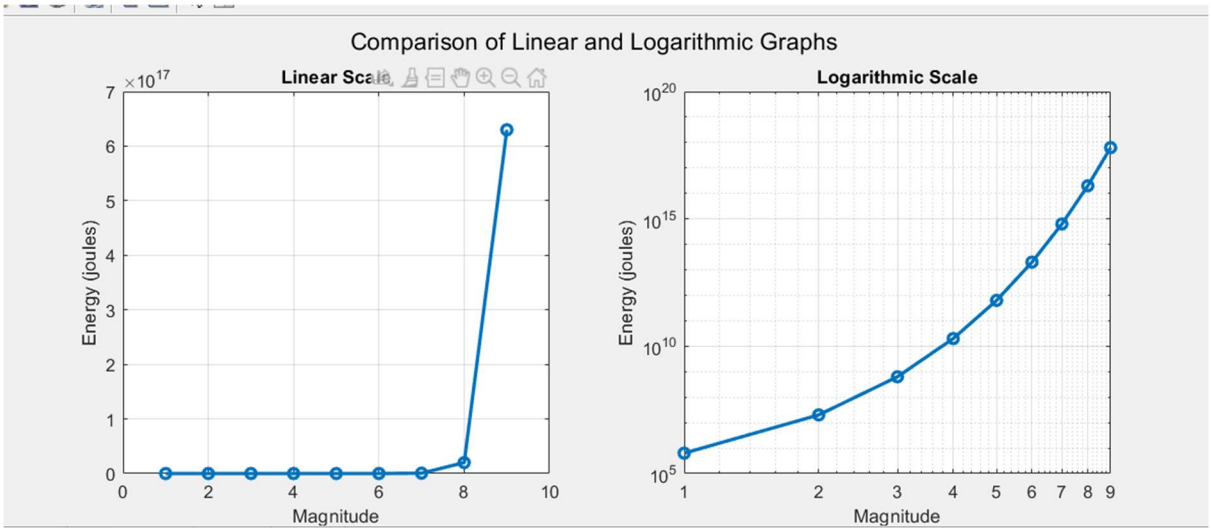
Comparison of Linear and Logarithmic Graphs
Linear Scale
Logarithmic Scale
Energy (joules)
Magnitude
×10^17
10^20
10^15
10^10
10^5