Home My Network Jobs Messaging Notifications Me For Business

Edit article
View stats
View post

The Oral Health Bulletin
2,752 subscribers

✓ Subscribed

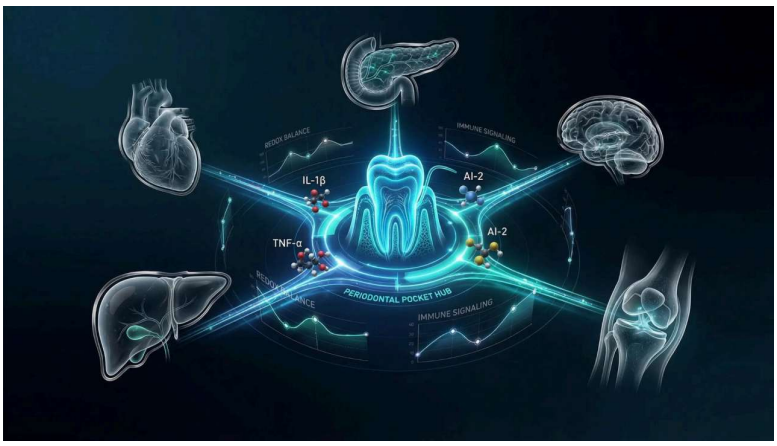

Part III — Clinical Biomarkers, Diagnostic Signatures, and Systemic Phenotypes

Stephen Thaddeus Connelly
Healthcare Innovator and coFounder and General Partner of Boutique Venture Partners Professor at UCSF

January 29, 2026

As periodontitis advances beyond a localized dysbiosis of the oral microbiome, it generates a constellation of measurable clinical signatures that reflect deeper disruptions in immune signaling, metabolic regulation, and systemic communication.

Within the Epoch #4 framework, periodontal disease is understood not simply as a microbial burden or an inflammatory lesion, but as a **dynamic, state-dependent disorder of biological information and energy flow.** Clinical biomarkers therefore function as readouts of how microbial biofilms, host immunity, and metabolic systems interact across scales from nanoscopic electron transfer to whole-body inflammatory coupling.

1. Diagnostic Signatures: Electrochemical and Quantum Profiles of Pathogenic Biofilms

Emerging research in microbial electrochemistry has introduced a physics-based approach to diagnosing biofilm activity. Pathogenic biofilms display distinct electronic, redox, and photoconductive properties that clearly differentiate them from planktonic or metabolically quiescent microbial states. Much of this insight is derived from studies on *Geobacter sulfurreducens*, a model organism for electroactive biofilms whose principles are increasingly applicable to complex oral biofilm communities.

A central discovery concerns the functional divergence between microbial nanowires composed of **OmcZ and OmcS cytochromes**. Highly active, mature biofilms depend on OmcZ-dominated nanowire networks, which exhibit superior electrical conductivity and enable sustained high current

production. Electrochemically, these biofilms display a reproducible **redox fingerprint** consisting of three discrete peaks centered around approximately **–280 mV, –140 mV, and –70 mV versus the Standard Hydrogen Electrode (SHE)**. The presence of these redox windows correlates with elevated metabolic throughput, structural maturity, and increased resilience to environmental stress.

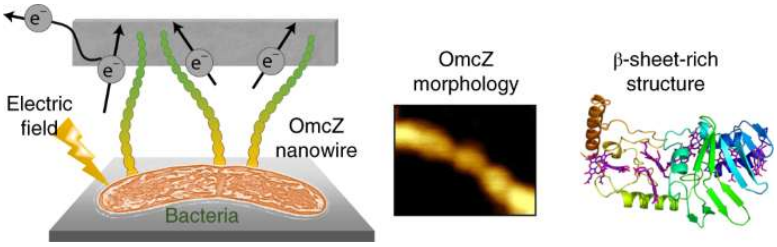

In contrast, OmcS-associated nanowires characterize earlier or less aggressive biofilm states. OmcS exhibits a narrower redox landscape with midpoint potentials in the range of **–130 to –176 mV**, optimized for near-thermoneutral electron transport. This configuration conserves energy during long-range electron transfer but supports lower overall conductance. Clinically, this distinction has diagnostic relevance. **Differential Pulse Voltammetry (DPV)** can detect shifts in redox profiles, where a transition from an OmcS-like to an OmcZ-like signature signals movement toward a highly conductive, metabolically intensified, and potentially more virulent biofilm state.

Beyond static electrochemical behavior, microbial nanowires also demonstrate **intrinsic photoconductivity**, introducing an additional diagnostic dimension. OmcS nanowires act as living photoconductors, exhibiting rapid (<100 ms), reversible increases in conductance—up to 100-fold—upon light excitation. This phenomenon is driven by **ultrafast (~200 femtosecond) electron transfer between heme groups**, suggesting coherent, quantum-assisted transport rather than classical thermal hopping. Optical interrogation of periodontal biofilms may therefore serve as a non-invasive diagnostic modality, where robust photoconductive responses indicate intact, quantum-active nanowire networks characteristic of established pathogenic biofilms.

2. Clinical Biomarkers: Information and Energy Vectors in the Periodontal Niche

Within the periodontal pocket, measurable biomarkers reflect two fundamental axes of disease behavior: **Information (I)**—the organization and transmission of biological signals—and **Energy (E)**—the metabolic infrastructure that sustains dysbiosis.

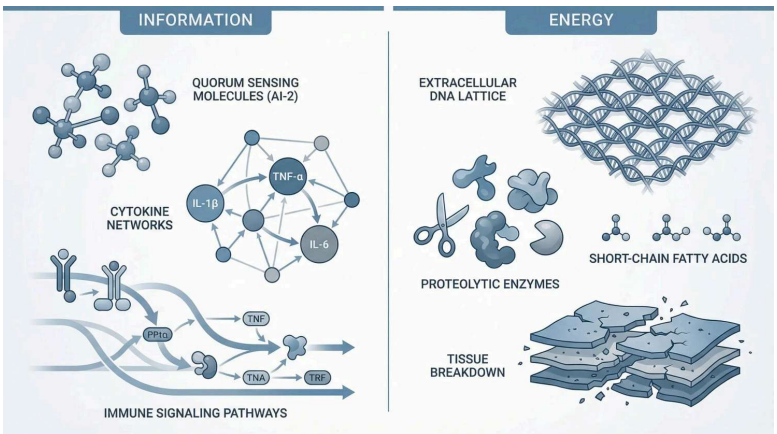

Information biomarkers capture microbial coordination and host immune signaling states. Quorum sensing molecules, particularly **autoinducer-2 (AI-2)** and acyl-homoserine lactones (AHLs), reflect bacterial population density, synchrony, and virulence readiness. Elevated levels of these autoinducers indicate that the biofilm is operating as a coordinated multicellular system capable of collective decision-making and adaptive virulence expression.

On the host side, immune dysregulation manifests through elevated inflammatory mediators in gingival crevicular fluid. **IL-1β, TNF-α, and IL-6** represent the host's response to immune signaling hijack and chemokine paralysis. These cytokines act as inflammatory "hub signals," linking periodontal inflammation to systemic disease networks. Additional markers such as **matrix metalloproteinases (MMP-8 and MMP-9)** indicate active connective tissue breakdown, while **calprotectin (S100A8/A9)** serves as an alarmin associated with disease severity, neutrophil activation, and systemic inflammatory burden.

Energy and terrain biomarkers reflect the structural and metabolic foundation of pathogenic biofilms. **Extracellular DNA (eDNA)** is a critical architectural component of the biofilm matrix, forming stabilized lattices through DNABII proteins such as HU-like histones. Its presence signifies a mature, chemically resistant biofilm terrain. Metabolically, dysbiotic communities shift from carbohydrate fermentation toward proteolysis, generating elevated levels of **short-chain fatty acids (SCFAs)** such as butyrate and propionate. These metabolites are cytotoxic to host tissues and serve as biochemical indicators of inflammation-driven nutrient extraction and energy exploitation.

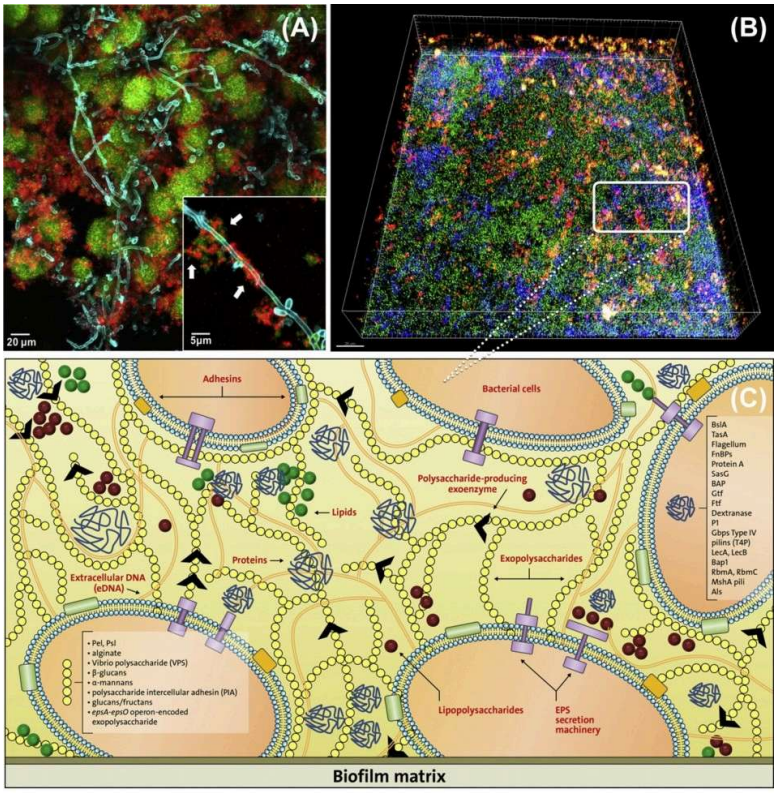

Trends in Microbiology

3. Systemic Phenotypes: The Systemic Coupling Vector (Ψ)

Periodontitis does not remain confined to the oral cavity; it functions as an inflammatory hub that couples local immune disruption to distant organ systems, producing distinct **systemic phenotypes**.

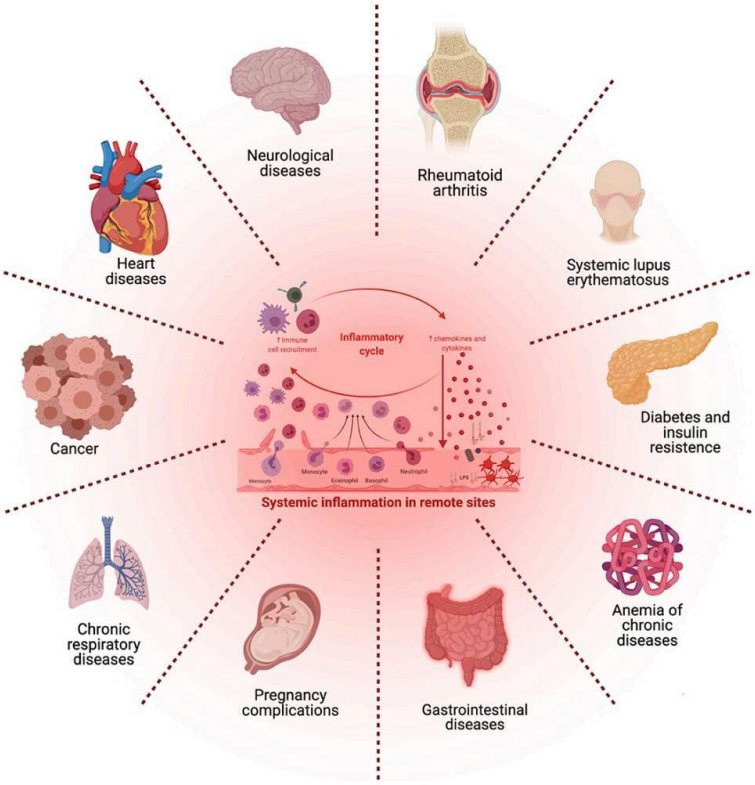

In the **diabetic–metabolic phenotype**, hyperglycemia amplifies periodontal inflammation through advanced glycation end-product (AGE)–RAGE signaling, while periodontal cytokines induce systemic insulin resistance. Clinically, patients present with refractory periodontitis alongside elevated HbA1c. Notably, periodontal therapy consistently reduces HbA1c by approximately **0.3–0.4%**, confirming a bidirectional metabolic–immune coupling.

The **atherogenic phenotype** arises from repeated bacteremia and inflammatory mediator spillover, contributing to endothelial dysfunction and plaque instability. Elevated **high-sensitivity C-reactive protein (hs-CRP)** and fibrinogen characterize this phenotype, and periodontal intervention has been shown to improve endothelial function and reduce systemic inflammatory markers.

The **autoimmune (rheumatoid) phenotype** is driven by *Porphyromonas gingivalis*–derived peptidylarginine deiminase (PPAD), which generates citrullinated neoantigens. This process promotes the production of **anti-citrullinated protein antibodies (ACPAs)**, linking periodontal disease to rheumatoid arthritis. Cytokine profiles dominated by TNF-α and IL-17 in gingival tissue mirror those observed in inflamed synovium.

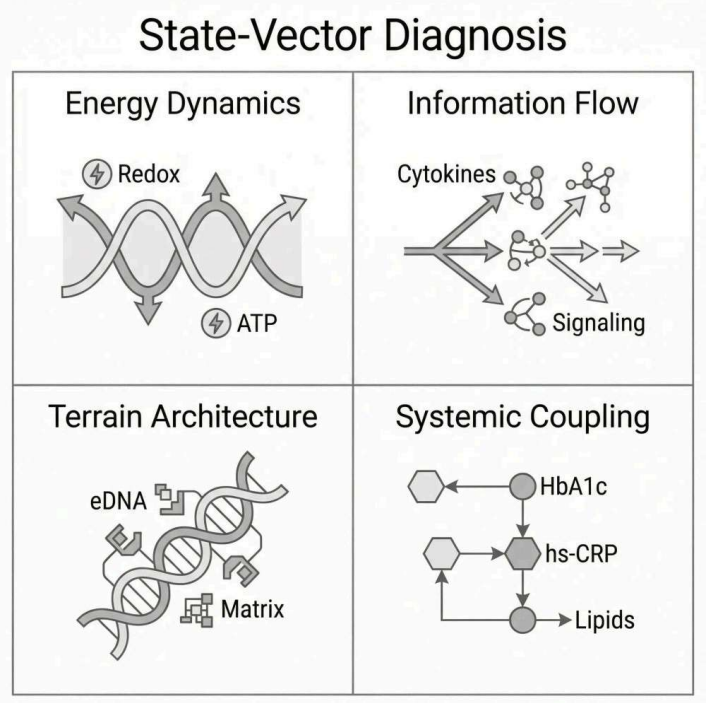

Finally, the **neuro-inflammatory phenotype** reflects compromised blood–brain barrier integrity and chronic neuroimmune activation. *P. gingivalis* components and gingipain proteases have been detected in Alzheimer's disease pathology, suggesting that periodontal inflammation may contribute to neurodegenerative signaling cascades and amyloid pathology.

Part IV: Therapeutic Recalibration, Information Restoration, and the Next Epoch of Periodontal Medicine

Your health journey starts with a single decision. Make it today.

Support Your Gums. Protect Your Heart. Learn more at www.GengyveUSA.com

#Periodontitis #SystemsBiology #ImmuneSignaling #TLRPathways #BiofilmScience #OralSystemicHealth #PrecisionMedicine #Inflammation #ImmuneDysregulation #QuantumBiology #MicrobialEcology #PeriodontalResearch #ChronicInflammation #OralMicrobiome #TranslationalMedicine #DiagnosticBiomarkers #Immunometabolism #NetworkMedicine #DentalInnovation #HostMicrobeInteraction #BiofilmResistance #ClinicalResearch #InflammatoryDiseases #MedicalScience #FutureOfDentistry #ImmuneIntelligence #OralHealthScience

Comments

20 • 2 comments • 3 reposts

Like Comment Share

Add a comment...

Most recent

Brian Quesnell • 1st (edited) 1mo
Clinical Instructor at UC San Diego focused on Endodontics an...