Grade 11 Physics Problem Set

Barsam Rahimi

August 2025

Problem 1: Some Topological Insights

Suppose you walk on the surface of the Earth (a sphere), starting at the equator. After 500 km east, 500 km north, 500 km west, and 500 km south, are you back at the same point ?

Problem 2: Structural Analysis Tour

After taking CIV100 at the University of Toronto, you are eager to explore the static structures at Shanghai but there's a little problem. There are no direct flights from Richmond Hill to Shanghai. You have to travel $45km\,[S\ 40^o\ W]$ to reach Toronto's Pearson airport. The plane has to travel $5723.4km\,[E\ 3^o\ N]$ to reach London, England. You must then travel to Bucharest, Romania which is $2103km\,[E\ 56^o\ S]$ from London and take a flight from there to Shanghai. However, Air Romania has recently canceled all operations to China due to economic difficulties. As a result, British Airways has started to offer a direct path from London to Shanghai which is $9262.2\,[E\ 24^o\ S]$. What is the total displacement from Richmond Hill to Shanghai ? What would the distance from Bucharest to Shanghai be if the airline had not canceled its operations ? Assume Earth is flat.

Problem 3: The Novak Djokovic Serve

In the 2009 Madrid Masters 1000 tennis tournament, Novak Djokovic hit a serve with the ball hitting the service box at a speed of 219 km/h, his fastest serve ever recorded. When Djokovic hit the ball, his racket had an angle of 84° with the ball. If the ball hit the ground at a horizontal distance of $6.35m$, and Djokovic hit the ball at a height of $3.05m$, what was the ball's initial velocity ? Assume that the ball travels a straight line path with no spin. Air resistance is negligible.

Problem 4: The Unfortunate Exam Memory

You have just completed your grade 11 physics exam, but unfortunately, you remember that you have a chemistry exam the morning after. This drives you crazy, so crazy that you crumple your equation sheet into a ball and throw it out the window at an initial constant velocity v_0. You fail to throw it far enough to cool your anger. So you try again, to throw it as far as possible to blow

some steam off. Show that the equation sheet ball will travel maximum vertical distance if thrown at an angle of $\theta = 45^o$.

Problem 5: Exercise Machine

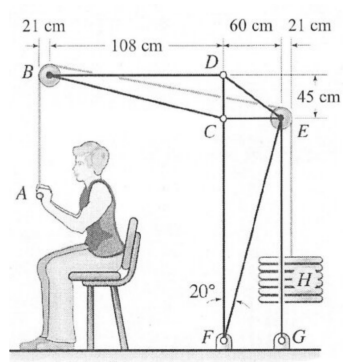

In the exercise machine shown above, if the stacks of weight labeled H weighs $500N$, calculate the forces in each member. Assume AB is vertical.

Problem 6: Moving With Your Car

After surviving the 2008 housing crisis, you have finally saved up enough money to buy a house! You realize that all your stuff from your room can fit into three boxes, A, B and C. Box A weighs about $5kg$, box B about $8kg$and box C about $12kg$. The boxes are cubes of side length $60cm$. You're in a hurry, so you quickly place the boxes without considering inertia, in the order B,C,A from bottom to top in your trunk. The car then starts to accelerate at a rate of $8m/s^2$ forward. But you forgot to close the trunk! If the boxes have a coefficient of friction $\mu_f = 0.3$ with each other and the mass of the car is negligible, how far will box C travel before it hits the ground ? The car trunk is $0.8m$ above the ground ? How far will box B travel ? Neglect air resistance.

Problem 7: Fission For CN Tower

A standard nuclear fission reaction at Pickering nuclear power plant produces about 200 MeV of energy. This energy is then transferred to wires through the mechanism of turning water into vapor

and directing that to spin turbine blades which are connected to electric generators. However, wires are made of metals (mostly copper) which dissipate heat when electricity flows through them. The heat dissipated by the wires can be described by:

$$Q(x,t) = \frac{I^2\rho}{A}xt$$

Where x is the length of the wire, t is how long it has been heating for, I is the current, $\rho = 1.69 \times 10^{-8}\ \Omega \cdot m$ is the "resistivity" of the wire and $A = 0.01\pi$ is its cross-sectional area. The generator has an efficiency factor of $\eta = 0.8$. The notation $Q(x,t)$ means the heat depends on both length of the wire, and the time.

1. Suppose that the fission reaction results in a direct current of 600A. If the distance from the power plant to Toronto is 40.2 kilometers, how long does the current need to flow for the energy from one reaction to be completely dissipated through heat ?

2. If you were a nuclear engineer at this power plant, what design factors would you consider to maximize the power plant's output ? (including delivery of current to cities)

3. A nuclear power plant typically transmits approximately 1GW of power. What must the rate of change of magnetic flux in the plant's generators be for this power transmission ? Assume current of 600A.

4. Write down the reaction for the radioactive decay that Uranium-235 is most likely to undergo.

5. For an expriment, you need Uranium-235 to undergo β^- decay. How much energy does it take to force this reaction ? Recall that $E = mc^2$. *Hint: mass-energy conservation.*

6. After calculating the amount of energy required for this reaction, do you believe it is realistic to think this will naturally happen ? Why ? What is the interpretation of the minus sign in the energy ?

Problem 8: Joseph Fourier's String

A string of length $L = 1m$ is fixed at both ends. Its fundamental frequency is $f_1 = 100$Hz.

1. Calculate the frequencies and wavelengths of the first four harmonics.

2. If we pluck a harmonic at its node, it will be 'silent'. List the above harmonics in order of increasing amplitude when plucked at $x = L/4$.

3. How does the addition of the vibrations with non-zero amplitudes from the previous part affect the vibration ? What does this tell us about the relationship between superposition and breaking down any vibration into simpler waves ? (recall that a vibration is a sum of pure sine waves)

4. Now Suppose the string is plucked at both $x_1 = L/4$ and $x_2 = 3L/4$. Which harmonics are enhanced and which ones are damped or canceled?

Challenge: You just saw how it is possible to combine multiple oscillations into one. Can you think of a way to work this backwards ? Given some arbitrary vibration, how can we decompose it into its fundamental vibrations ? (The problem name is a hint)

Problem 9: All Things Electrical

Solve for V_0 in the circuit below once using Nodal and once using Mesh analysis.

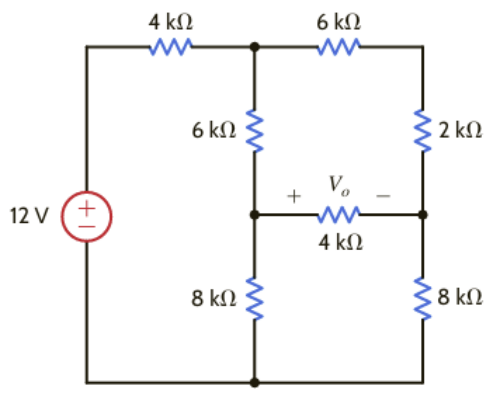

Problem 10: The Coil

A square coil of wire has side length $L = 0.2m$ and 100 turns. The coil is placed in a uniform magnetic field $B = 0.5T$ pointing perpendicular to the plane of the coil at $t = 0$. The coil is connected to a low-resistance voltmeter. The coil rotates about one of its edges at a constant angular speed $\omega = 50$ degrees/s.

1. Write an expression for the magnetic flux.
2. If the flux' rate of change is $100\sin(50t)\ V$, what is the maximum induced emf ?
3. At what angle of the coil relative to the magnetic field is induced emf zero ? Explain Physically.