2.1. Notes

Site: Eduvos LMS
Course: ITLCA3 (First Block)
Book: 2.1. Notes
Printed by: George Conradie
Date: Monday, 2 March 2026, 7:29 PM

Table of contents

1. Learning outcomes
2. Introduction to Programmable Logic Controllers
- 2.1. Introduction to Programmable Logic Controllers
- 2.2. Parts of a PLC system
- 2.3. Principle of Operation
- 2.4. PLCs versus Computers

1. Learning outcomes

By the end of this lesson, you should be able to:

- Have an overview of programmable logic controllers

Prescribed Reading

Frank Petruzella, Programmable Logic Controllers.
McGraw-Hill Higher Education, 5th Edition, 2017. Print
ISBN: 9780073373843

Chapter 1, Section 1.1 - 1.6

2. Introduction to Programmable Logic Controllers

2.1. Introduction to Programmable Logic Controllers

A programmable logic controller (PLC) is an industrial-grade computer that is capable of being programmed to perform control functions. The programmable controller has eliminated much of the hardwiring associated with conventional relay control circuits. The PLC is designed for multiple input and output arrangements, extended temperature ranges, immunity to electrical noise, and resistance to vibration and impact.

Figure 1-1 Programmable logic controller.
Source: (*a–b*) Courtesy GE Intelligent Platforms.

PLCs have the following benefits over old relay systems:

(a)

(b)

Figure 1-2 Relay- and PLC-based control panels. (*a*) Relay-based control panel. (*b*) PLC-based control panel.

Increase Reliability: Once a program has been written and tested, it can be easily downloaded to other PLCs. Since all the logic is contained in the PLC's memory, there is no chance of making a logic wiring error.

More Flexibility: It is easier to create and change a program in a PLC than to wire and rewire a circuit. With a PLC the relationships between the inputs and outputs are determined by the user program instead of the manner in which they are interconnected.

Lower Cost: PLCs were originally designed to replace relay control logic, and the cost savings have been so significant that relay control is becoming obsolete except for power applications. Generally, if an application has more than about a half-dozen. control relays, it will probably be less expensive to install a PLC.

Communications Capability A PLC can communicate with other controllers or computer equipment to perform such functions as supervisory control, data gathering, monitoring devices and process parameters, and downloading and uploading programs.

Faster Response Time: PLCs are designed for high-speed and real-time applications. The

programmable controller operates in real-time, which means that an event taking place in the field will result in the execution of an operation or output. Machines that process thousands of items per second and objects that spend only a fraction of a second in front of a

sensor require the PLC's quick-response capability.

Easier to Troubleshoot: PLCs have resident diagnostics and override functions that allow users to easily trace and correct software and hardware problems. To find and fix problems, users can display the control program on a monitor and watch it in real-time as it executes.

Easier to Test Field Devices: A PLC control panel has the ability to check field devices at a common point. For example, a control system consisting of hundreds of input and output field devices may be contained within a very large manufacturing area. Thus, it would take a considerable amount of time to check each device at its location. By having each device wired back to a common point on a PLC module, each device could be checked for operation fairly quickly.

2.2. Parts of a PLC system

A PLC has four major components:

- Processor module (CPU)
- I/O modules
- Programming device
- Power supply module

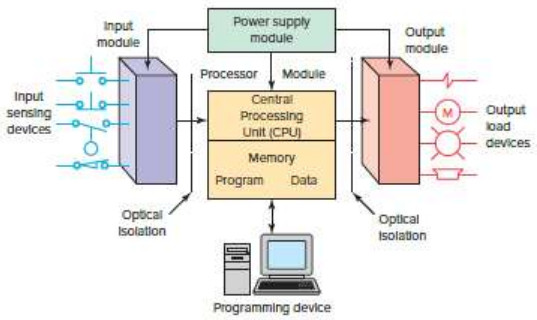

The **Processor Module**, or CPU, is the brain of the PLC, executing control instructions based on the user-defined program. It reads and executes control programs, handles communication with other modules and devices, makes decisions based on input data, and performs diagnostics and monitoring to ensure system health.

I/O modules interface the PLC with field devices. Input modules receive signals from devices like sensors, converting them into digital signals for the CPU. Output modules send control signals from the CPU to devices like actuators, converting digital signals into physical signals. Both modules ensure signal compatibility and provide electrical isolation.

The **programming device** is used to create, modify, and upload control programs to the PLC. It allows users to develop and edit control logic, upload and download programs and provides tools for real-time monitoring and debugging. Its graphical user interface simplifies program development and troubleshooting.

The **power supply** module provides electrical power to the CPU, I/O modules, and other PLC components. It ensures a stable and regulated power supply, converts input power into required voltage levels, and may include battery backup. It also protects against electrical faults, ensuring the reliability and safety of the PLC system.

2.3. Principle of Operation

Here a mixer motor is to be used to automatically stir the liquid in a vat when the temperature and pressure reach preset values. In addition, direct manual operation of the motor is provided by means of a separate pushbutton station. The process is monitored with temperature and pressure sensor switches that close their respective contacts when conditions reach their preset values.

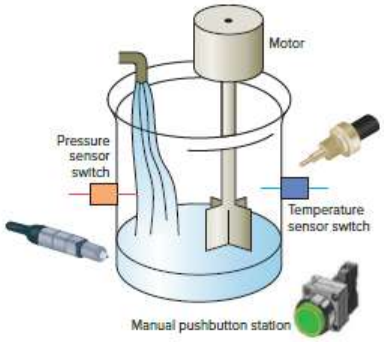

Figure 1-16 Mixer process control problem.

This control problem can be solved using the relay method for motor control shown in the relay ladder diagram.

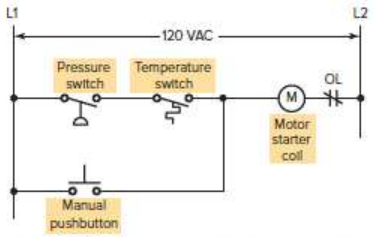

Figure 1-17 Process control relay ladder diagram.

The motor starter coil (M) is energized when both the pressure and temperature switches are closed or when the manual pushbutton is pressed.

A programmable logic controller might be used for this application. The same input field devices (pressure switch, temperature switch, and pushbutton) are used. These devices would be hardwired to an appropriate input module according to the manufacturer's addressing location scheme.

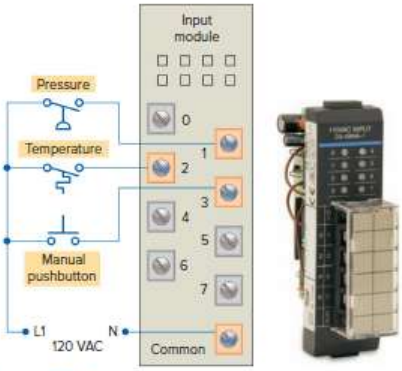

Figure 1-18 Typical wiring connections for a 120 VAC modular configured input module.

The same output field device (motor starter coil) would also be used. This device would be hardwired to an appropriate output module according to the manufacturer's addressing location scheme.

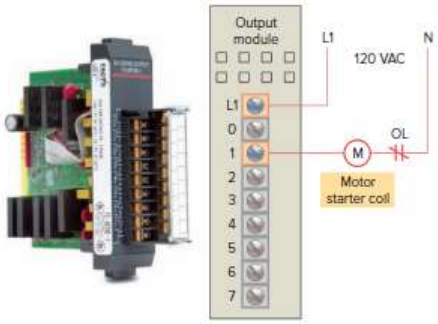

Figure 1-19 Typical wiring connections for a 120 VAC modular configured output module.

The PLC ladder logic program would be constructed and entered into the memory of the CPU.

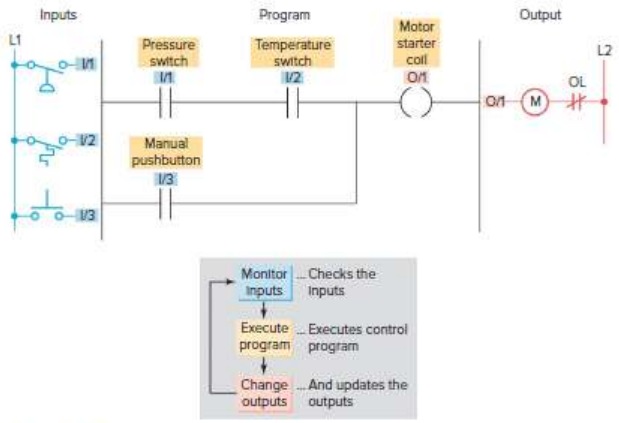

Figure 1-20 Process control PLC ladder logic program with typical addressing scheme.

2.4. PLCs versus Computers

Unlike PCs, the PLC has no permanently attached keyboard, CD drive, or monitor.

Figure 1-24 PLC installed in an industrial environment.
Source: Courtesy of Softac Systems, Ltd.

- **Operating Environment**. PLCs are designed to operate in the industrial environment with a wide range of ambient temperature, humidity, and electrical noise factors.
- **Programming.** The PLC is programmed in relay ladder logic or four other types of programming languages and comes with its program language built into its memory.
- **Program Execution**. PLCs execute a single program in a sequential order, while computers execute several programs or tasks simultaneously in any order.