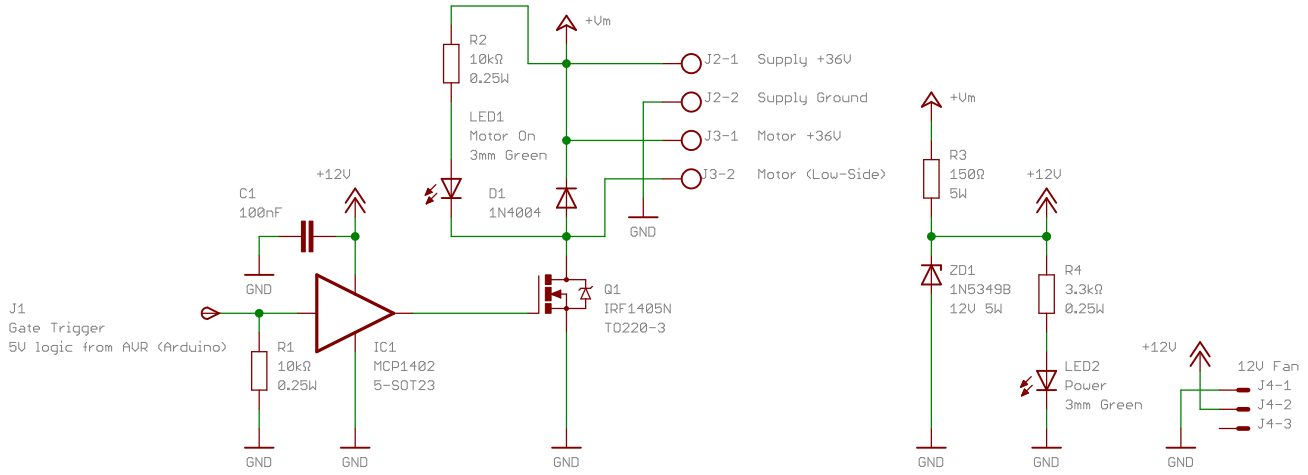

36V DC Spindle Motor Switch

Luke Weston, 2015

SpindleMotor

not saved!

Sheet: 1/1