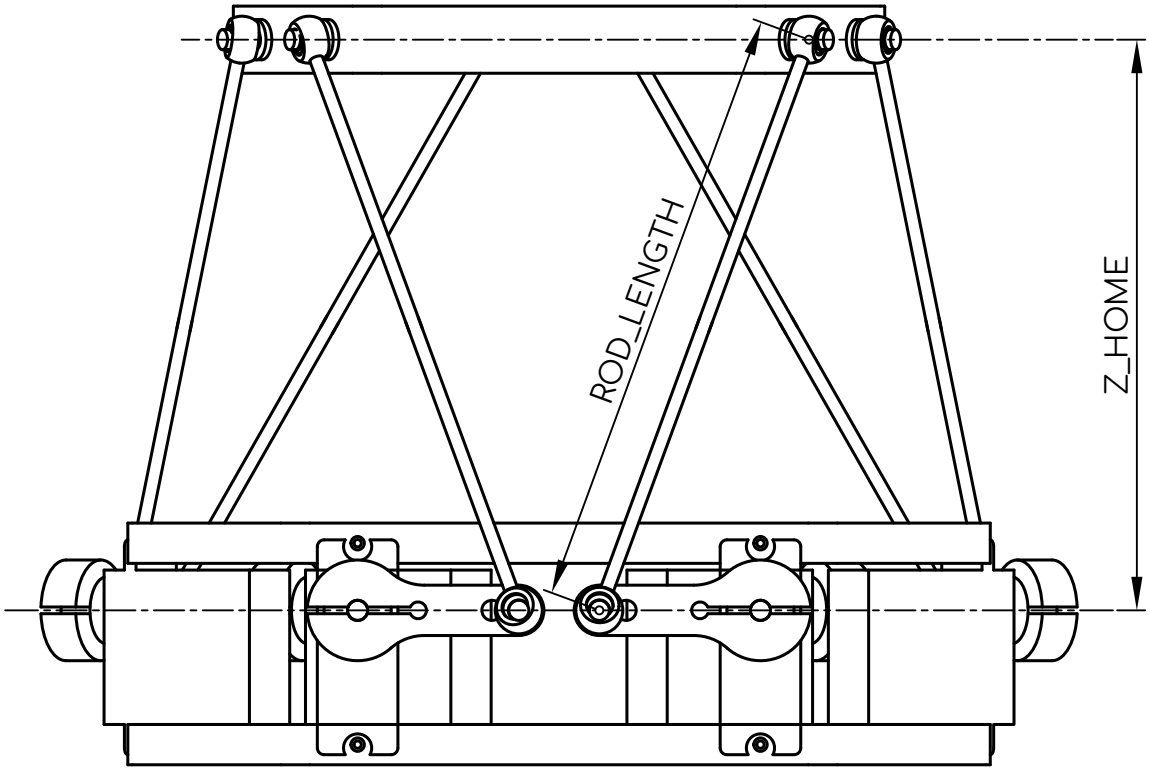
ROD_LENGTH
Z_HOME

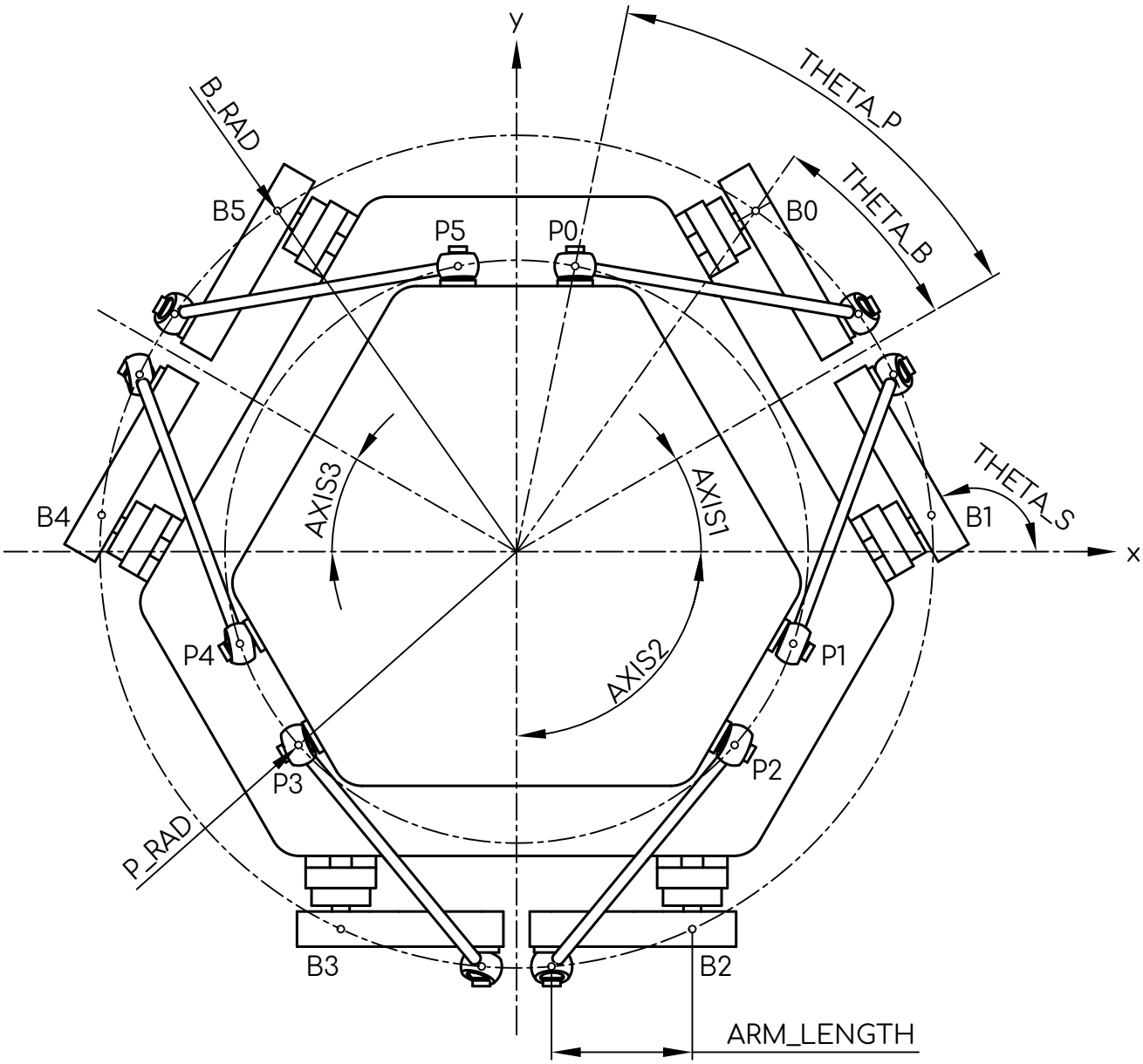
y
x
THETA_P
THETA_B
THETA_S
B_RAD
P_RAD
ARM_LENGTH
B0
B1
B2
B3
B4
B5
P0
P1
P2
P3
P4
P5
AXIS1
AXIS2
AXIS3