ECN	Rev No.	Revision Note	Drafter	Checked	Date
N/A	1.00	Phototype	George		20210407
	2.00	Add SW3	George		20210511
	3.00	Change use PT5126A-H	George		20210927

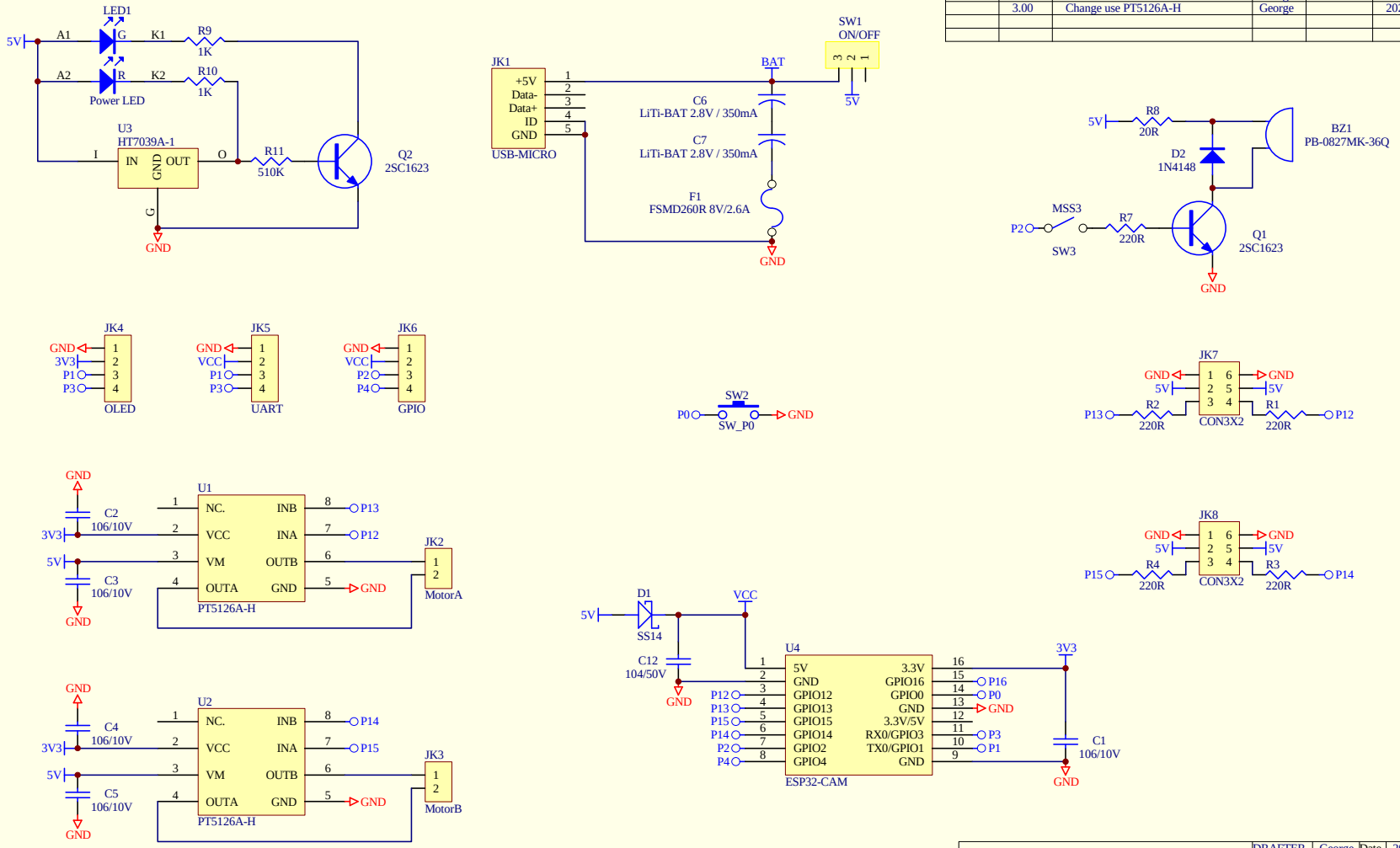

TEL:886-2-86672899 FAX:886-2-22181726	DRAFTER	George	Date 20210927
Product: ESP32CAM Motor Shield	DESIGNER	George	Date 20210927
Revision: 3.00 Date: 20210927	CHECKED	--	Date --
Size: A4	NAME	--	
Sheet of	DWG NO.		