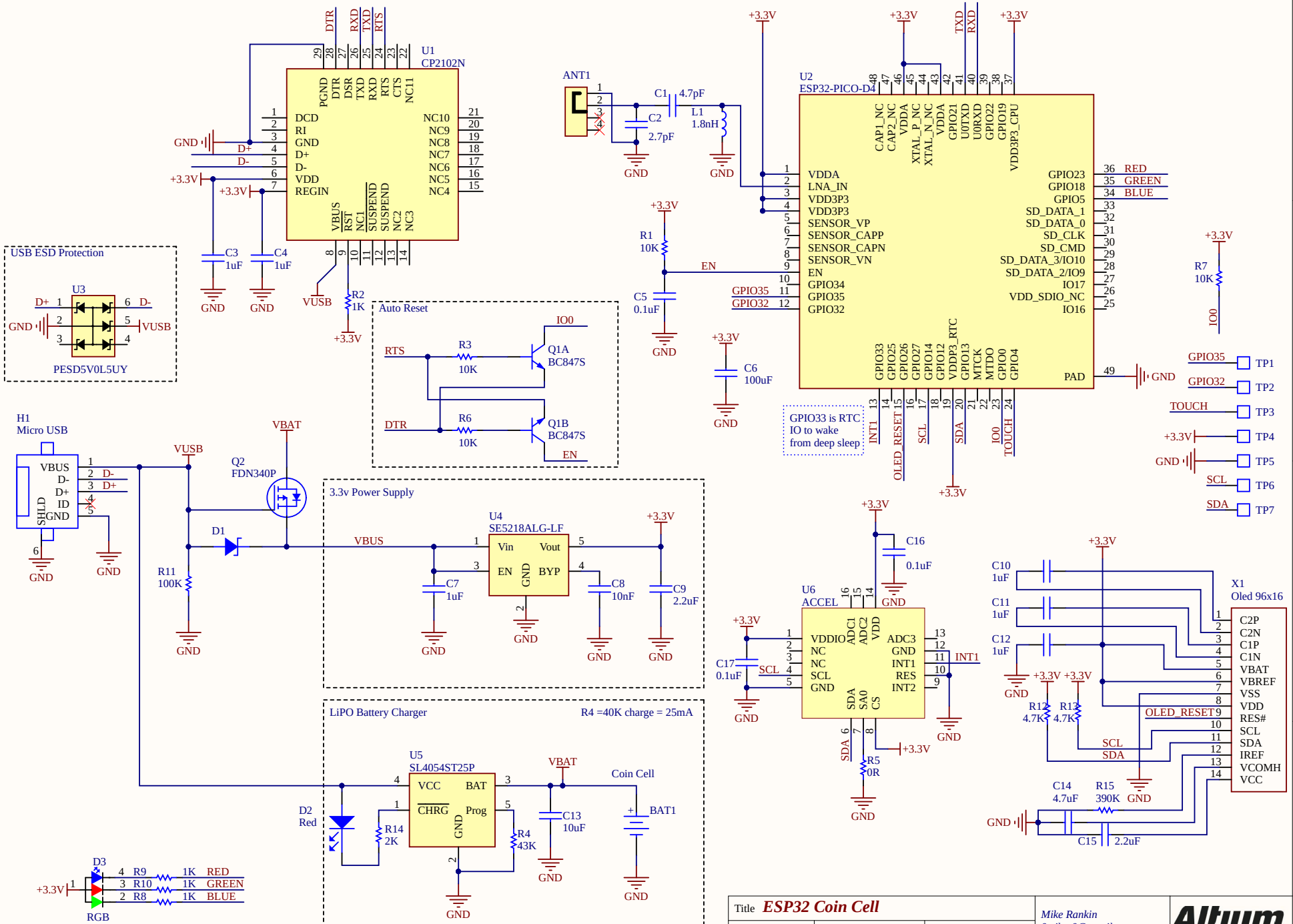

Title	ESP32 Coin Cell	
Size: Letter	Number: 1	Revision: 1
Date: 2019-02-26	Time: 12:59:38 PM	Sheet 1 of 1

Mike Rankin
0miker0@gmail.com
@mikerankin

Altium Designer