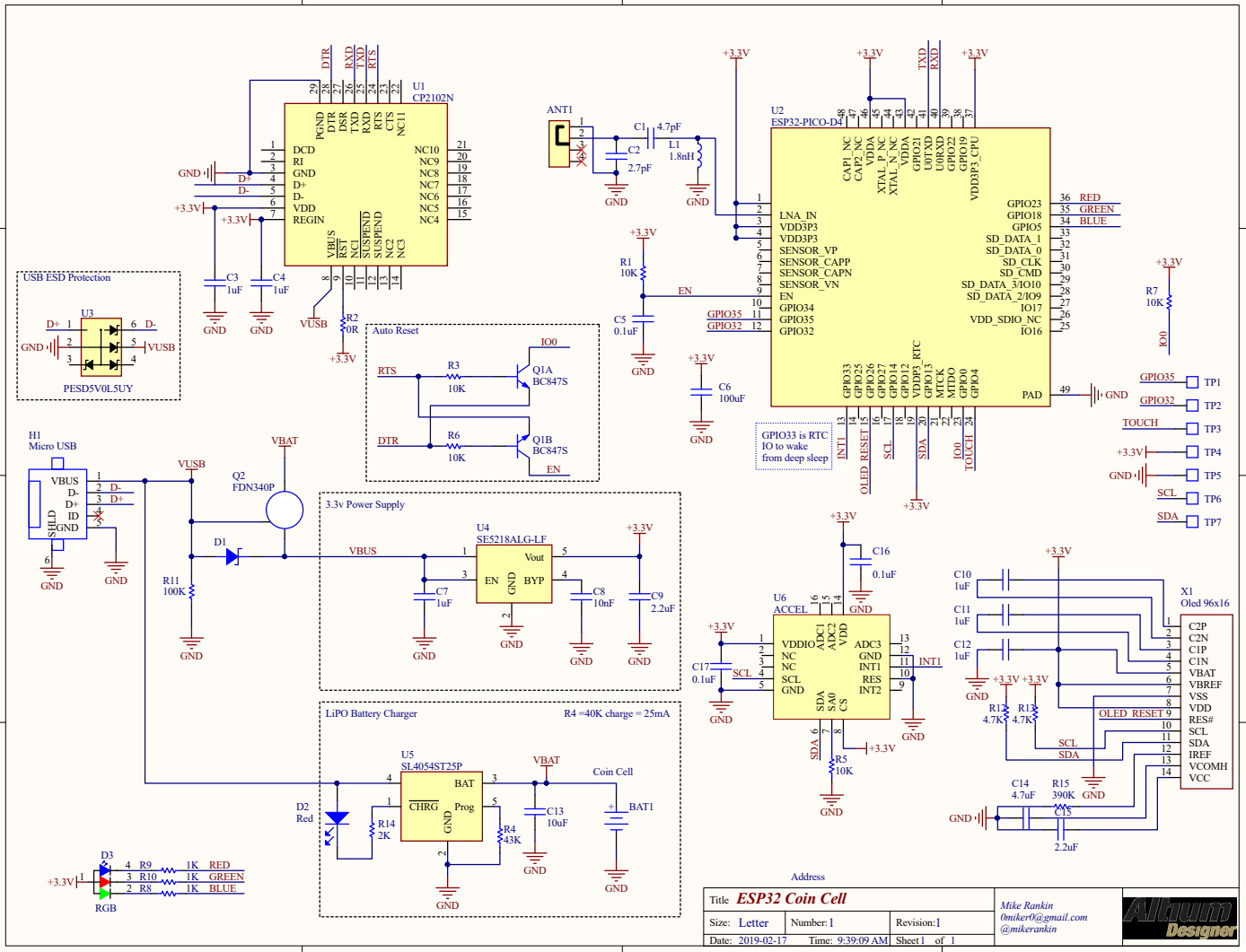
U1
CP2102N
U2
ESP32-PICO-D4
ANT1
USB ESD Protection
U3
PESD5V0L5UY
H1
Micro USB
Q2
FDN340P
D1
Auto Reset
Q1A
BC847S
Q1B
BC847S
3.3v Power Supply
U4
SE5218ALG-LF
LiPO Battery Charger
R4 =40K charge = 25mA
U5
SL4054ST25P
D2
Red
Coin Cell
BAT1
D3
RGB
U6
ACCEL
X1
Oled 96x16
GPIO33 is RTC
IO to wake
from deep sleep
Address
Title ESP32 Coin Cell
Size: Letter
Number: 1
Revision: 1
Date: 2019-02-17
Time: 9:39:09 AM
Sheet 1 of 1
Mike Rankin
0miker0@gmail.com
@mikerankin
Altium Designer