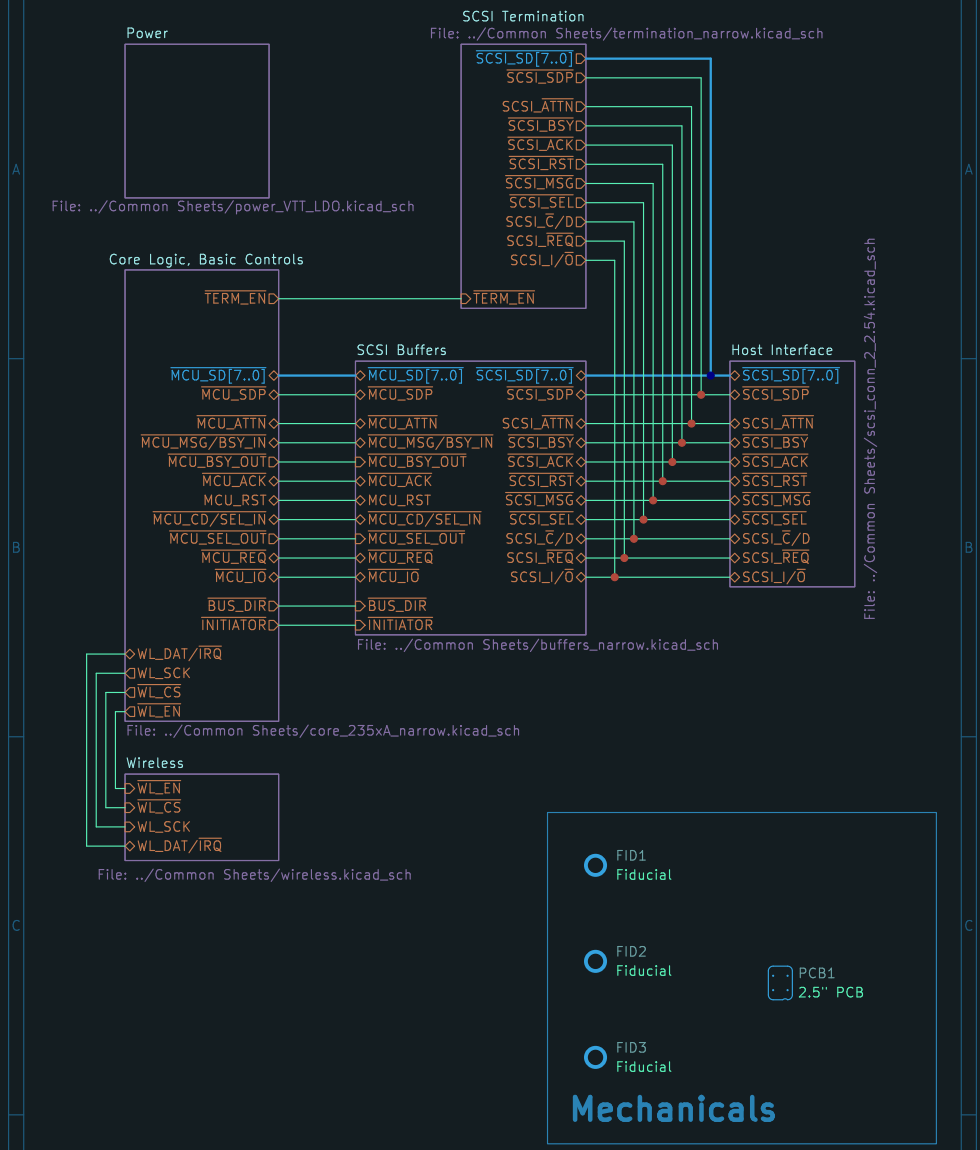

FIRST DRAWING VERSION FOR COMMON PLATFORM VARIANTS IS V2.0

BLOCK DIAGRAM/TOP SHEET
Drawn by George R. M.

Sheet: /
File: GBSCSI2_2.5N_235x.kicad_sch

Title: GBSCSI2 Common Platform, 2.5" Narrow Variant, RP235x

Size: A5	Date: 2026-02-01	Rev: 2.0
KiCad E.D.A. 9.0.2		Id: 1/10

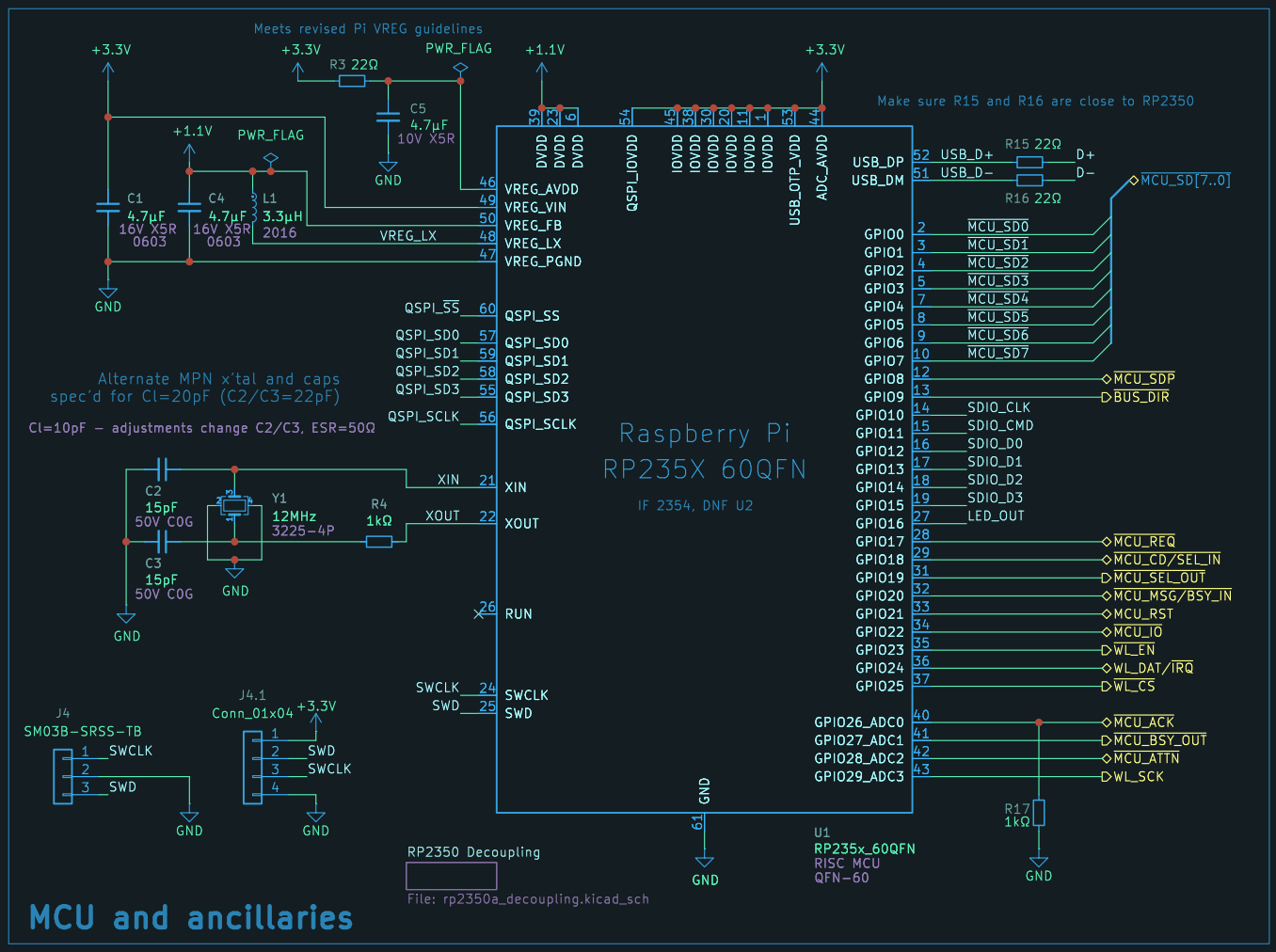

MCU and ancillaries

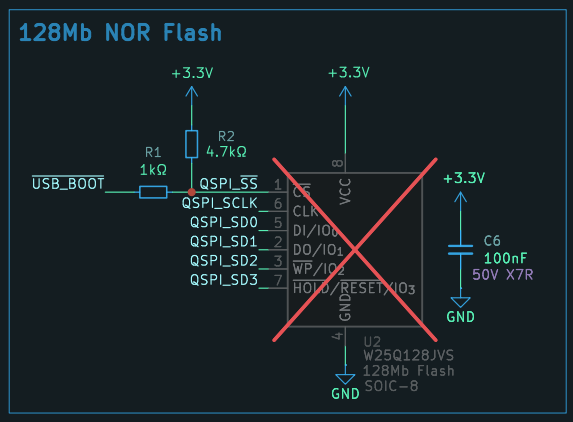

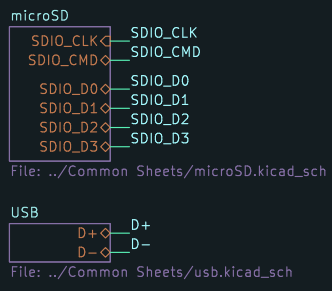

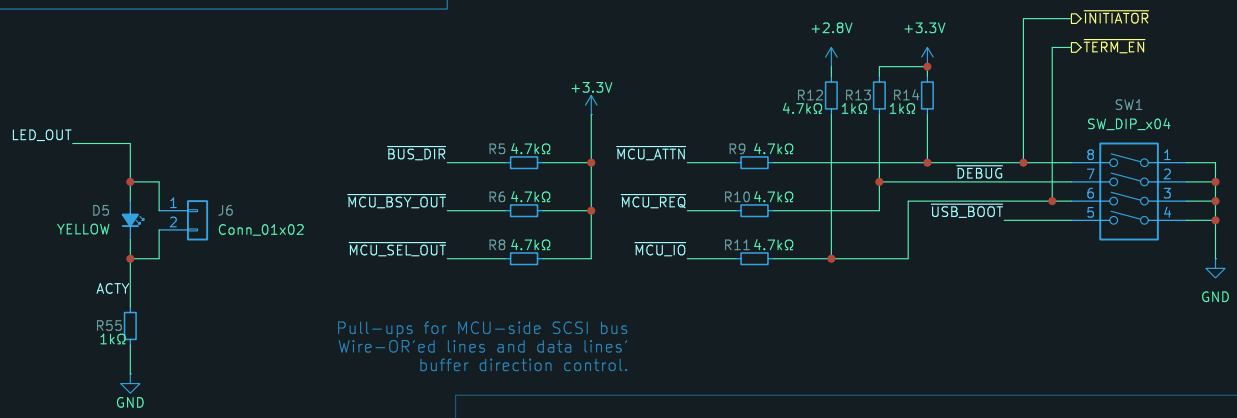

Pull-ups for MCU-side SCSI bus
Wire-OR'ed lines and data lines'
buffer direction control.

Drawn by George R. M.

Sheet: /Core Logic, Basic Controls/
File: core_235xA_narrow.kicad_sch

Title: GBSCSI2 Common Platform Core – RP235xA, Narrow

Size: A4	Date: 2026-02-01	Rev: 2.0
KiCad E.D.A. 9.0.2		Id: 2/10

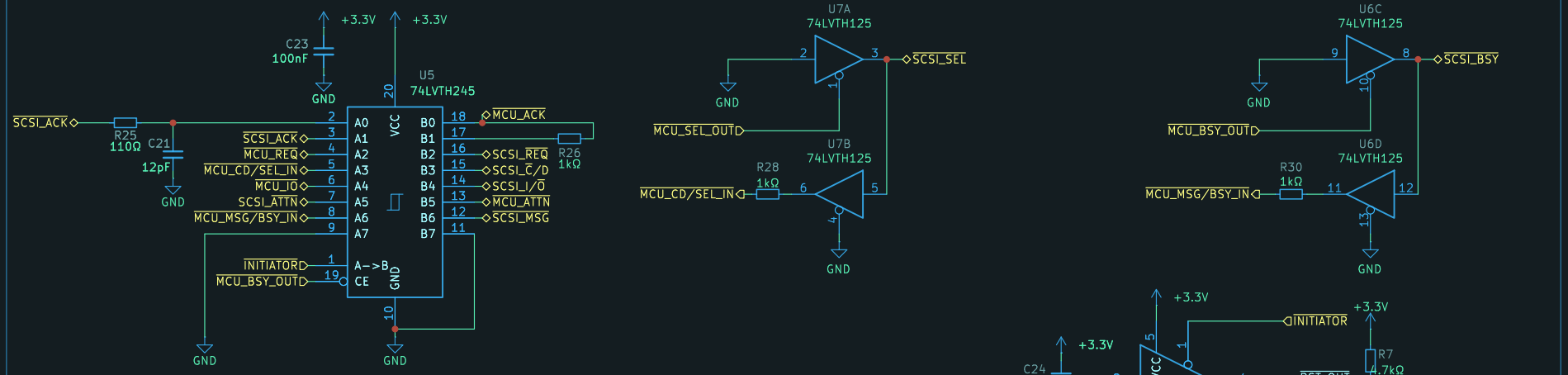

SCSI bus Wire-OR'ed lines (SEL, BSY, RST) driven by LVTH125s using the enable gate, so as to make the driver go HiZ when line not asserted.

SCSI_RST is typically an input from the bus. In initiator mode, it is allowed to be driven low by the RP2350 via an LVTH125, and will be deasserted once MCU initializes pins after POR.

Control line buffering

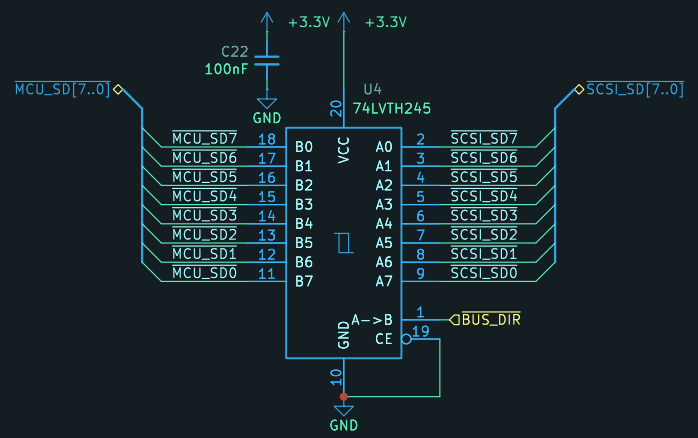

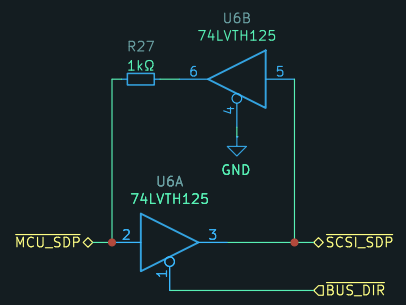

Data line buffering

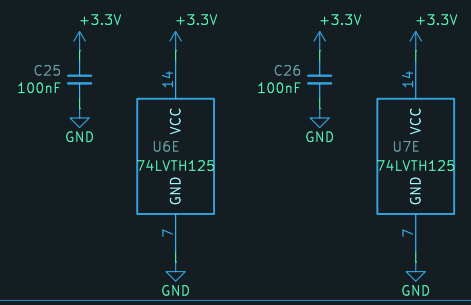

LVTH125 Power

Drawn by George R. M.

Sheet: /SCSI Buffers/
File: buffers_narrow.kicad_sch

Title: GBSCSI2 – Common Platform – Buffers, Narrow

Size: A4	Date: 2026-02-01	Rev: 2.0
KiCad E.D.A. 9.0.2		Id: 6/10

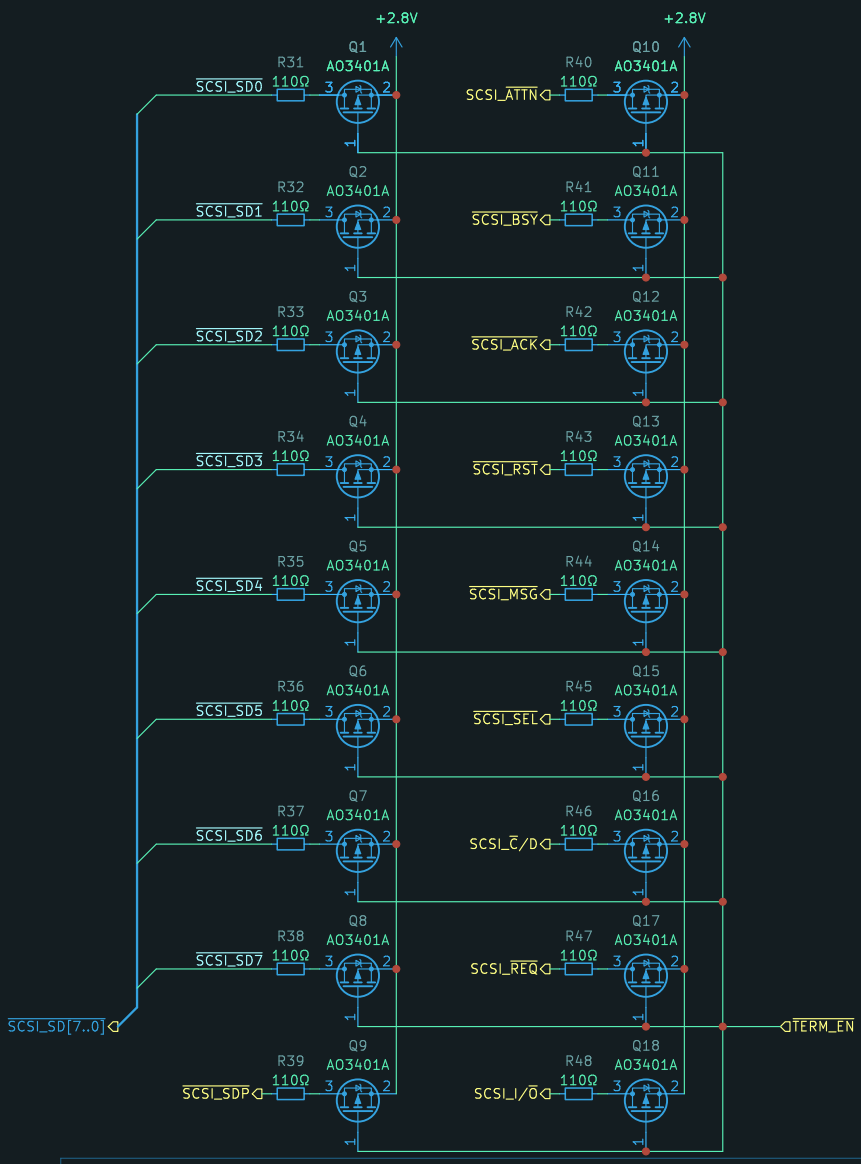

Drawn by George R. M.

Sheet: /SCSI Termination/
File: termination_narrow.kicad_sch

Title: GBSCSI2 Common Platform — Termination, Narrow

Size: A5	Date: 2026-02-01	Rev: 2.0
KiCad E.D.A. 9.0.2		Id: 7/10

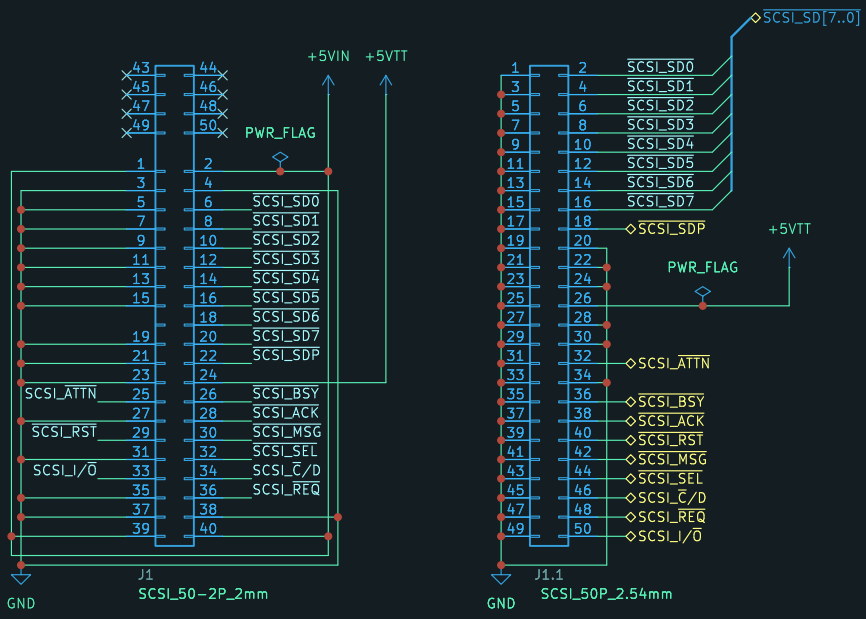

Drawn by George R. M.

Sheet: /Host Interface/
File: scsi_conn_2_2.54.kicad_sch

Title: GBSCSI2 Common Platform – SCSI Headers, 2mm/2.54mm

Size: A5	Date: 2026-02-01	Rev: 2.0
KiCad E.D.A. 9.0.2		Id: 8/10

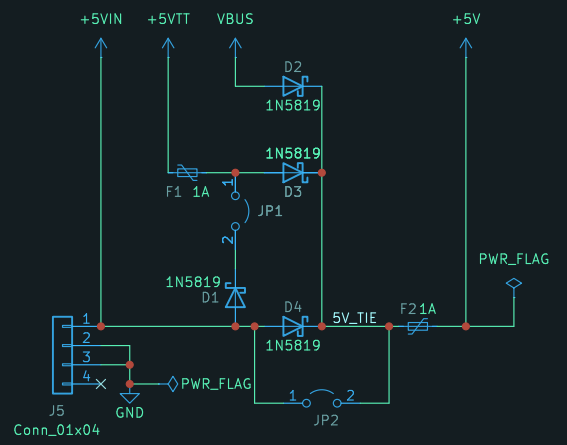

Input, Source Switching

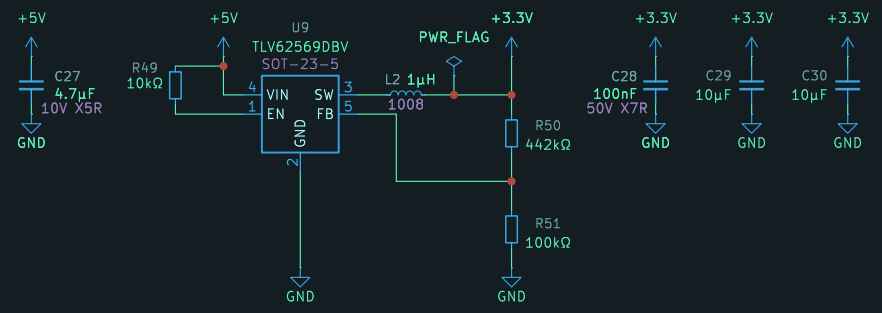

+3.3V DC-DC

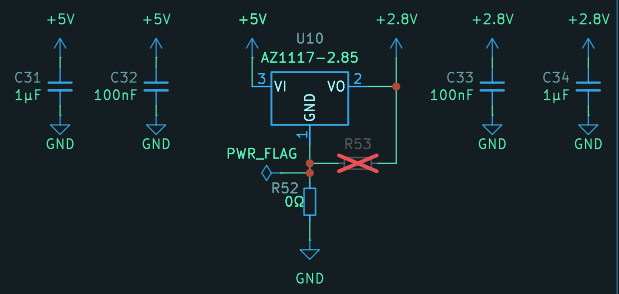

+2.85V Termination Voltage LDO

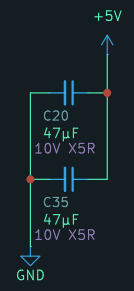

Bulk Decoupling

Drawn by George R. M.

Sheet: /Power/
File: power_VTT_LDO.kicad_sch

Title: GBSCSI2 Common Platform – Power, 3.3V DC-DC + LDO VTT

Size: A4	Date: 2026-02-01	Rev: 2.0
KiCad E.D.A. 9.0.2		Id: 9/10

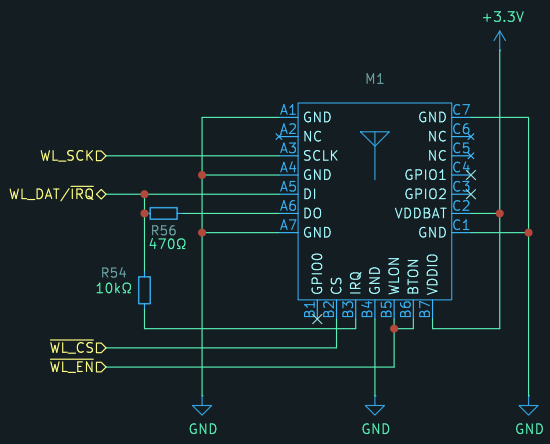

Drawn by George R. M.

Sheet: /Wireless/
File: wireless.kicad_sch

Title:

Size: A5	Date: 2026-02-01	**Rev: 2.0**
KiCad E.D.A. 9.0.2		Id: 10/10

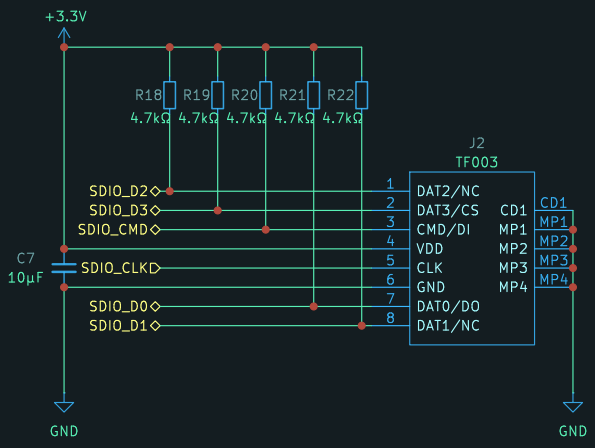

Drawn by George R. M.

Sheet: /Core Logic, Basic Controls/microSD/
File: microSD.kicad_sch

Title: GBSCSI2 Common Platform Core – microSD Slot

Size: A5	Date: 2026-02-01	Rev: 2.0
KiCad E.D.A. 9.0.2		Id: 3/10

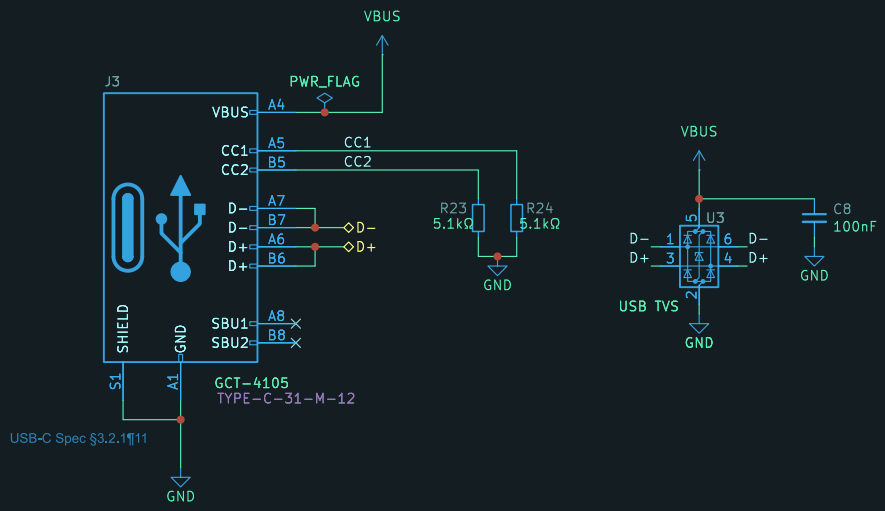

Drawn by George R. M.

Sheet: /Core Logic, Basic Controls/USB/
File: usb.kicad_sch

Title: GBSCSI2 Common Platform Core – USB Type-C Connector

Size: A5	Date: 2026-02-01	Rev: 2.0
KiCad E.D.A. 9.0.2		Id: 4/10

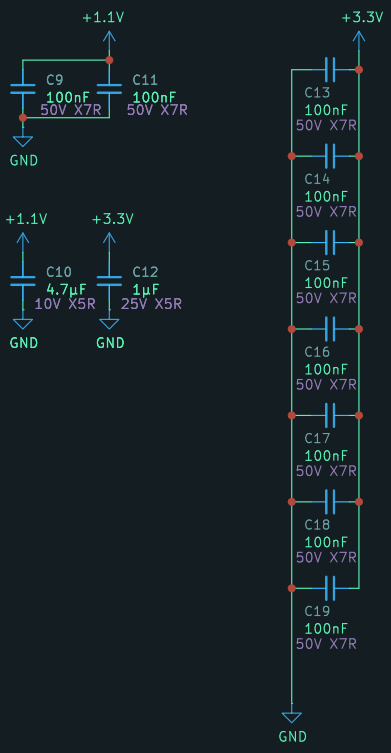

Drawn by George R. M.

Sheet: /Core Logic, Basic Controls/RP2350 Decoupling/
File: rp2350a_decoupling.kicad_sch

Title: GBSCSI2 Common Platform Core – RP2350 Decoupling

Size: A5	Date: 2026-02-01	Rev: 2.0
KiCad E.D.A. 9.0.2		Id: 5/10