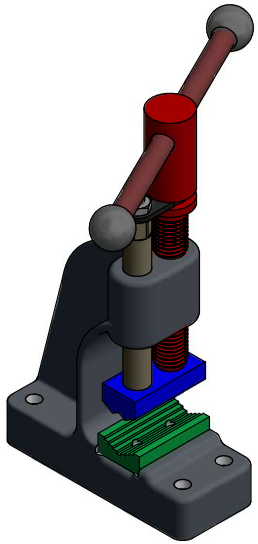

(Scale .75" to 1")

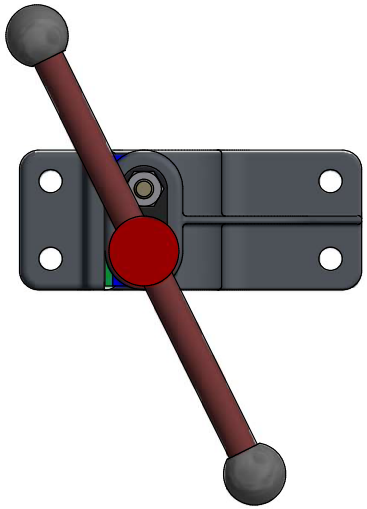

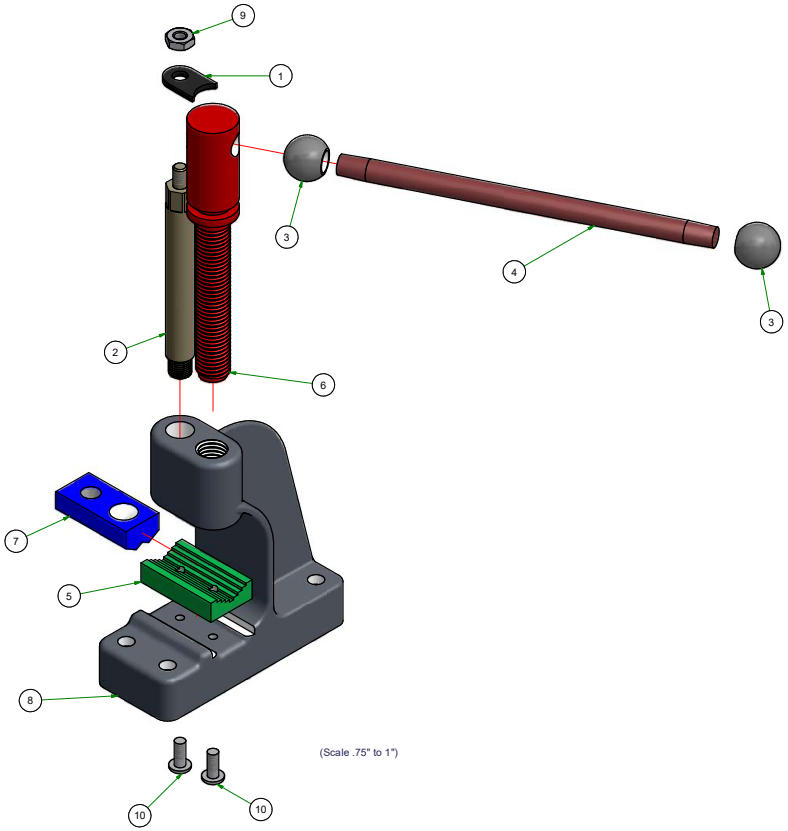

(Scale .75" to 1")

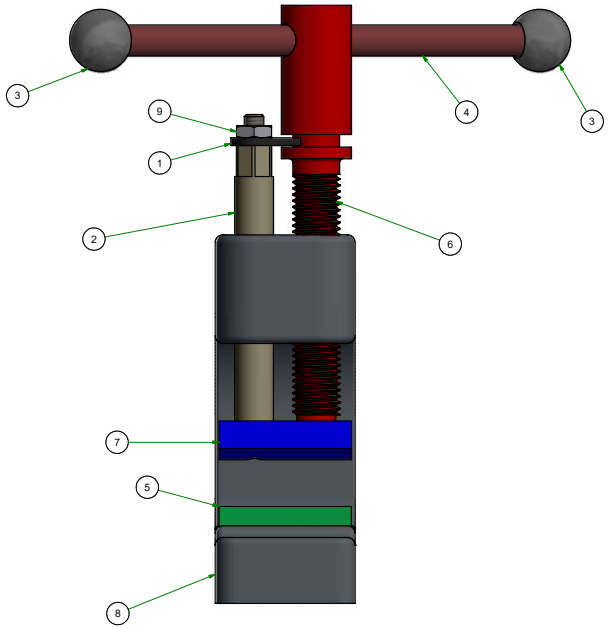

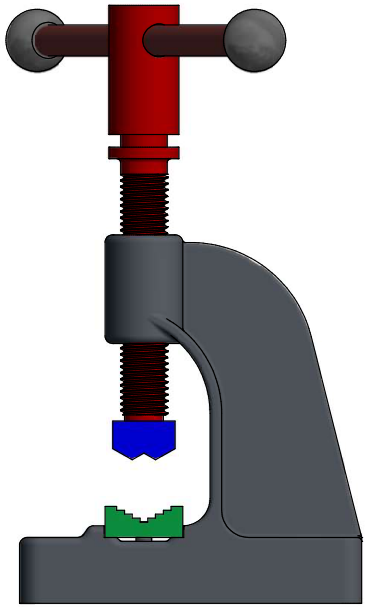

NUMBER	QTY.	PART NAME	DESCRIPTION
1	1	CLIP	MALL IRON
2	1	GUIDE POST	COLD ROLLED STEEL
3	2	HANDLE BALL	C R STEEL
4	1	HANDLE ROD	C R STEEL
5	1	LOWER JAW	C R S - HARDEN
6	1	SCREW	COLD ROLLED STEEL
7	1	UPPER JAW	C R S - HARDEN
8	1	VISE FRAME	MALL IRON
9	1	ANSI B18.6.3 - 5/16 - 18	Hex Machine Screw Nut
10	2	ANSI B18.6.3 - 1/4 - 20 - 5/8	Cross Recessed Pan Head Machine Screw - Type IA

Aurora Central Catholic H.S.

Title: PIPE VISE

Drawn By: George Pappas

Class: CAD 3 | Block: 1

Date: 12/18/13 | Scale: 1" to 1"

PRE - ENGINEERING 3

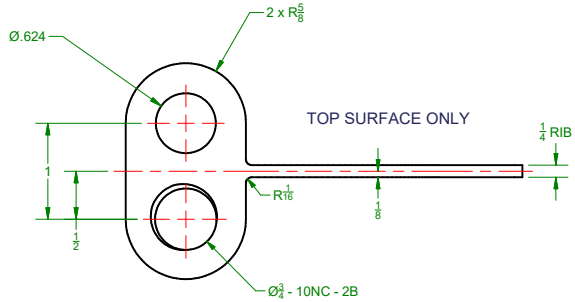

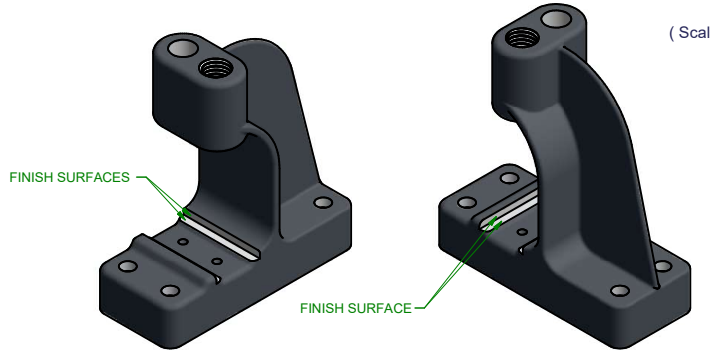

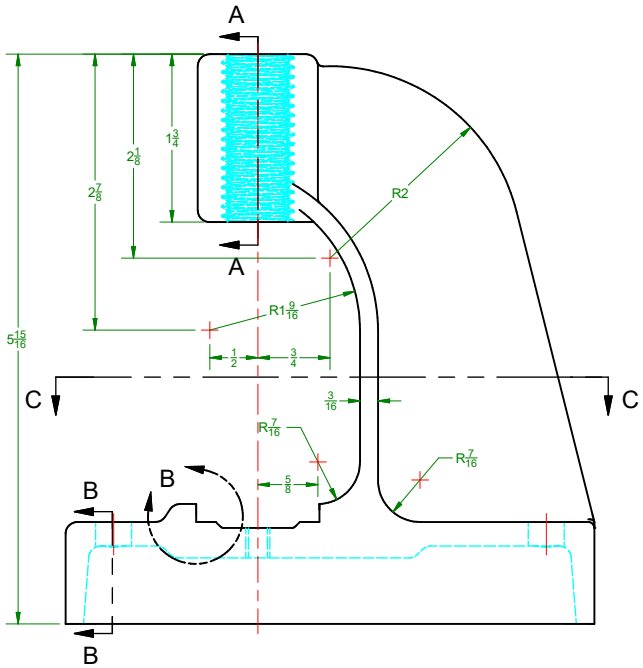

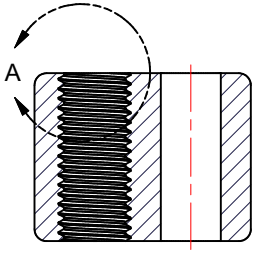

SECTION A-A

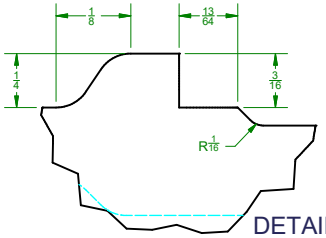

DETAIL B
SCALE 3 : 1

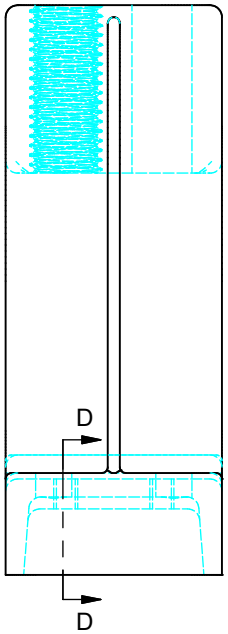

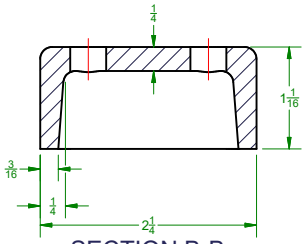

SECTION B-B

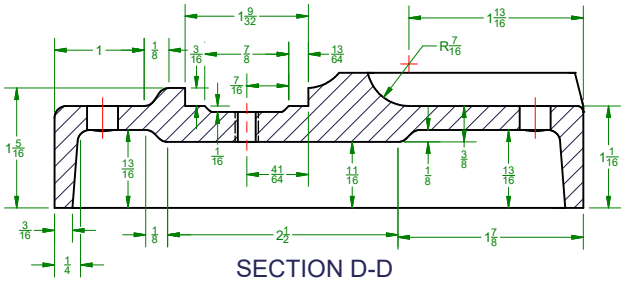

SECTION D-D

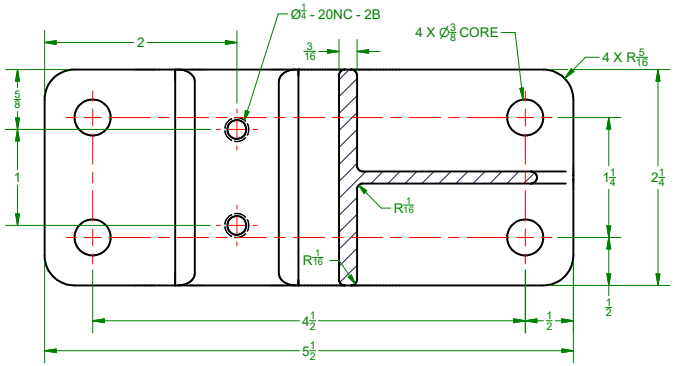

SECTION C-C

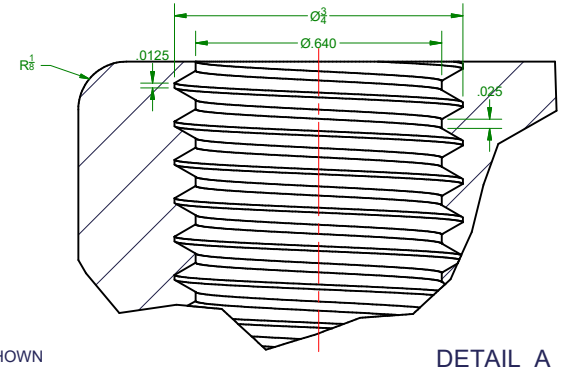

DETAIL A
SCALE 4 : 1

FILLETS & ROUNDS 1/8R
UNLESS OTHERWISE SHOWN

8 VISE FRAME

MALL IRON - 1 REQD.

Aurora Central Catholic H.S.	
Title: VISE FRAME	
Drawn By: George Pappas	
Class: CAD 3	Block: 1
Date: 12/2/13	Scale: 1" to 1"

CENTRAL PRE - ENGINEERING 3

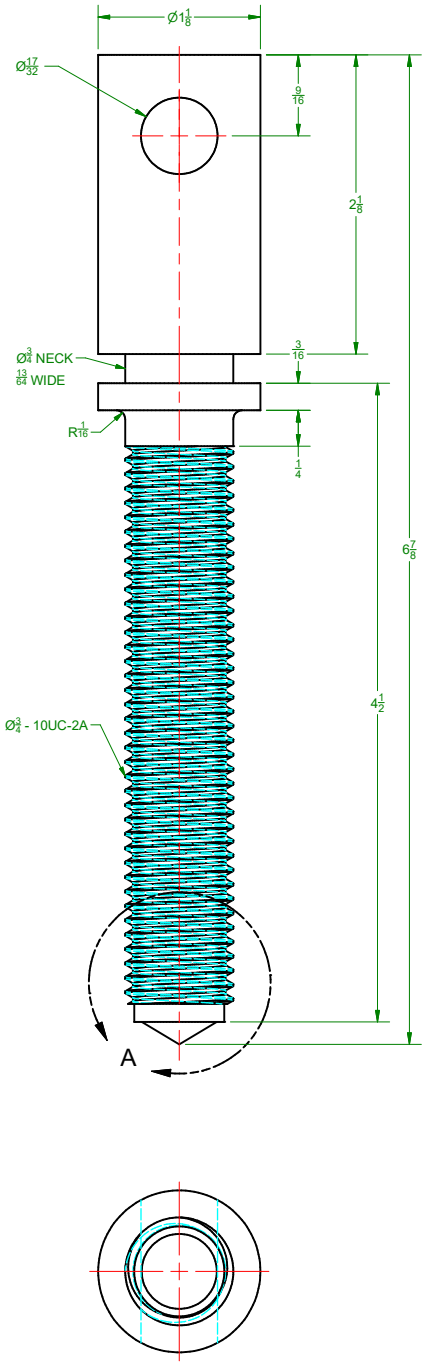

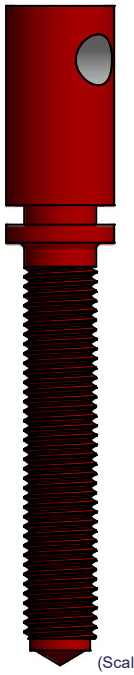

(Scale 1" to 1")

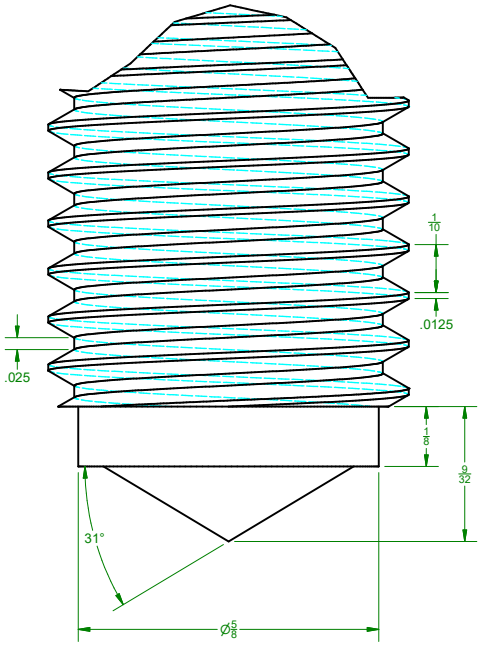

DETAIL A
SCALE 5 : 1

6 SCREW

C. R. STEEL - 1 REQD.

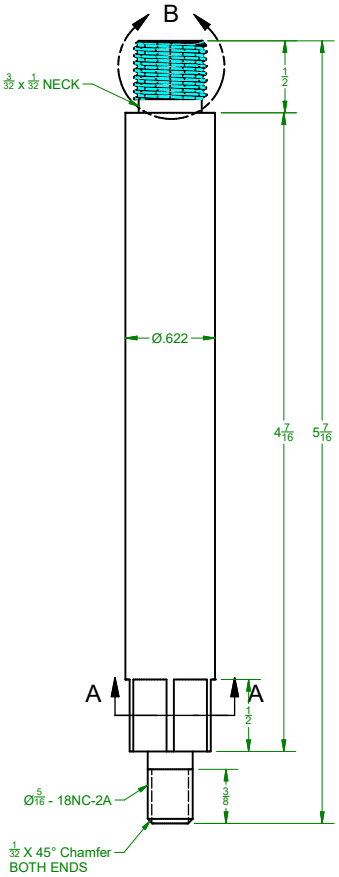

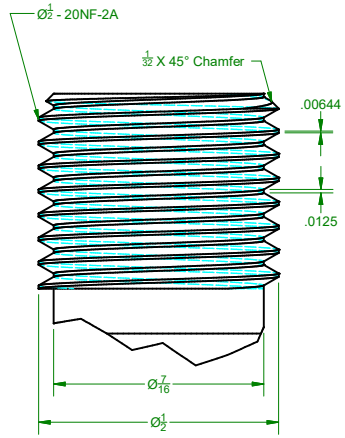

DETAIL B
SCALE 5: 1

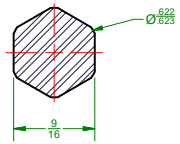

SECTION A-A

2 GUIDE POST

C. R. STEEL - 1 REQD.

Aurora Central Catholic H.S.	
Title: PIPE VISE PARTS	
Drawn By: George Pappas	
Class: CAD 3	Block: 1
Date: 12/16/13	Scale: 1.5" to 1"

PRE - ENGINEERING 3

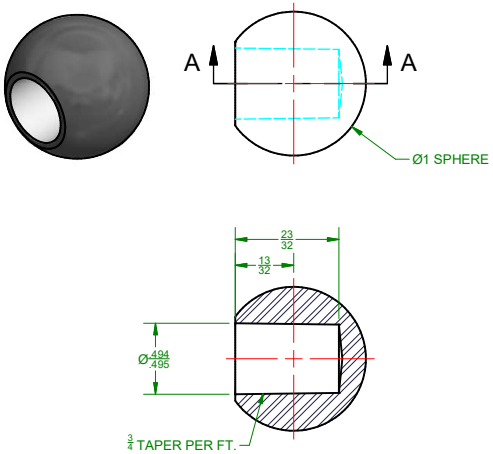

SECTION A-A

3 HANDLE BALL
C. R. STEEL - 2REQD.
F. A. O.

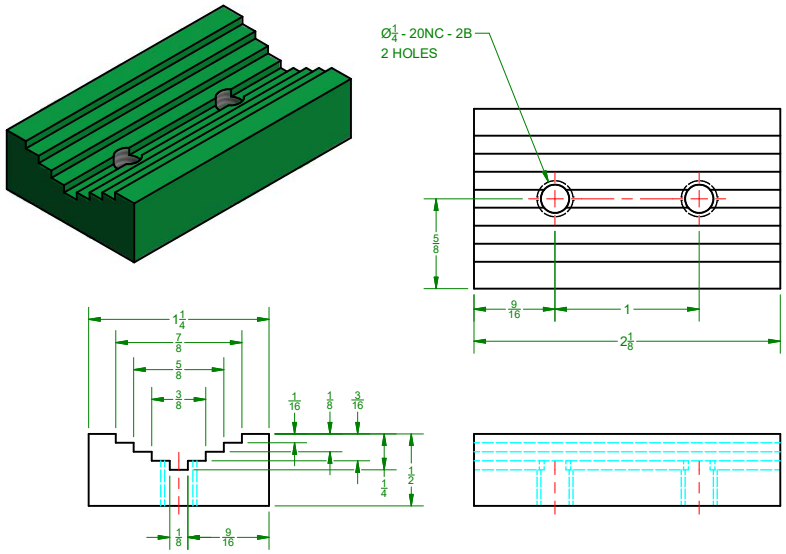

5 LOWER JAW
C. R. STEEL - PACK
HARDEN - 1 REQD.

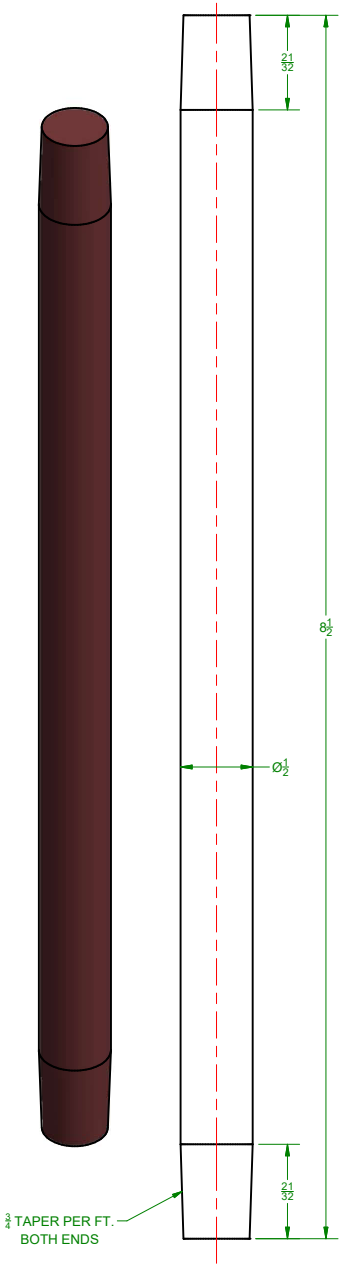

4 HANDLE ROD
C. R. STEEL - 1 REQD.

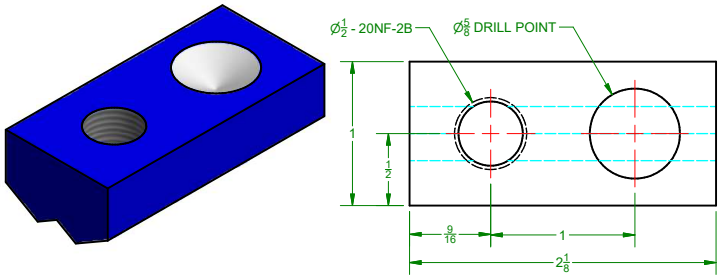

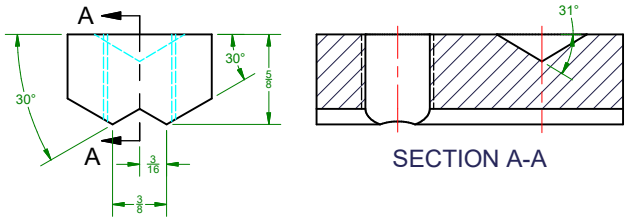

SECTION A-A

SYMMETRICAL PART

7 UPPER JAW
C. R. STEEL - PACK
HARDEN - 1 REQD.

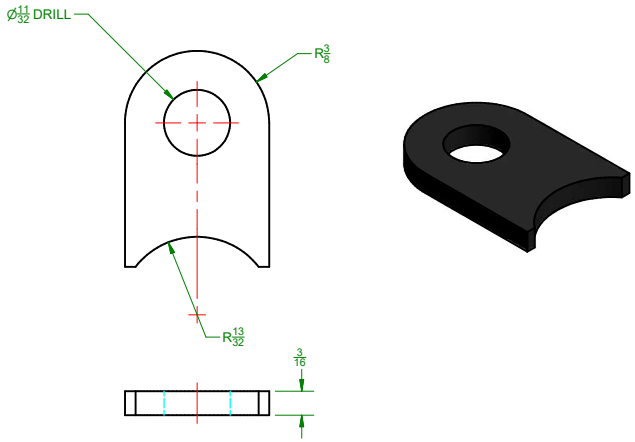

1 CLIP
MALL. IRON - 1 REQD.
F. A. O.

STANDERD PARTS

10 1 5/8x8 LG. ROUND HD. MACHINE SCR. - 2 REQD.

9 5/16 HEX. SEMI-FIN NUT 1 REQD.

Aurora Central Catholic H.S.	
Title: PIPE VISE PARTS	
Drawn By: George Pappas	
Class: CAD 3	Block: 1
Date: 12/13/13	Scale: 1.5" to 1"

PRE - ENGINEERING 3