Icon and Banner Authoring Manual

CTR

2013/10/21

Version 1.4

The content of this document is highly confidential and should be handled accordingly.

© 2012–2014 Nintendo
CONFIDENTIAL

CTR-06-0258-011-A
Released: November 26, 2014

Confidential

These coded instructions, statements, and computer programs contain proprietary information of Nintendo and/or its licensed developers and are protected by national and international copyright laws. They may not be disclosed to third parties or copied or duplicated in any form, in whole or in part, without the prior written consent of Nintendo.

Table of Contents

1 Introduction 7
1.1 How to Read This Document 7

2 An Overview of Icons and Banners 8
2.1 Types of Icons and Banners 8
2.1.1 CTR Icons 8
2.1.2 CTR Title Banners 9
2.1.3 CTR Contextual Banner Data 10
2.1.4 Expanded Save Data Icons 11
2.1.5 Icons for Download Play Child Programs 11
2.1.6 Icons for StreetPass Boxes 12
2.1.7 Icons for StreetPass Messages 12
2.2 Tools Required to Create Icons 12
2.2.1 CTR-SDK 13
2.2.2 NintendoWare for CTR for Banner (Package for Creating Banner Data) 14

3 How to Create CTR Icons 15
3.1 Prepare the Icon Images 15
3.1.1 Notes 16
3.2 Convert and Compress the Images 16
3.3 Create the Icon Data 17
3.3.1 Configure the Banner Spec File 17
3.3.2 Use ctr_makebanner 17
3.4 Embed in the ROM 17
3.5 Icon Database and Cache 18

4 How to Create CTR Title Banners 19
4.1 Create Banner Model Data 19
4.1.1 Rotate the Model 19
4.1.2 Adjust the View Range and Parallax 19
4.1.3 Support for Language Settings 22
4.1.4 Title Name Notation 22
4.1.5 Data Naming Conventions 22
4.1.6 Intermediate File Restrictions 23
4.1.7 Miscellaneous 25
4.1.8 Convert the Intermediate Data to Model Data 25
4.2 Create Banner Sound Data 25
4.3 Create Banner Data 26
4.4 Embed in the ROM 26

4.5 Check the Processing Load 27

5 How to Create CTR Contextual Banner Data 28
5.1 Replaceable Data 28
5.2 How to Create Replacement Data 29
5.2.1 Replacement Texture Data 29
5.2.2 Replacement Text 30
5.3 Statically Creating Local Contextual Banner Data 30
5.4 Dynamically Creating Local Contextual Banner Data 31
5.5 Creating Downloadable Contextual Banner Data 32
5.6 Banner and Application Settings 32

6 How to Create Expanded Save Data Icons 33
6.1 Creating Expanded Save Data Icons 33
6.2 Implementing Expanded Save Data Icons 33

7 How to Create Icons for Download Play Child Programs 34
7.1 Creating Icons for Download Play Child Programs 34
7.2 Implementing Icons for Download Play Child Programs 34
7.3 Banner Data for Download Play Child Programs 34

8 How to Create Icons for StreetPass Boxes 35
8.1 Creating Icons 35
8.2 Implementing Icons 35
8.2.1 Creating a StreetPass Box 35
8.2.2 Changing Icons 36

9 How to Create Icons for StreetPass Messages 37
9.1 Creating Icons 37
9.2 Implementing Icons 37

10 Notes and Precautions 39
10.1 Bug Where Parts of an Icon Are Displayed Incorrectly 39
10.2 Bug in Menus Displayed for Demos on Networked Interactive Retail Displays 41
10.3 Bug That Causes the Home Menu to Freeze When Replacing Texture Data in the CTR Contextual Banner 41

Revision History 43

Code

Code 3-1 Sample Invocations of `ctr_TexturePackager` 16

Code 3-2 Sample BSF File Content 17

Code 3-3 Sample Invocation of the `ctr_makebanner` Command 17

Code 3-4 Sample Invocation of the `ctr_makerom` Command 17

Code 4-1 Convert to Model Data 25

Code 4-2 Sample BSF File Denotation 26

Code 4-3 Sample Invocation of the `ctr_makebanner` Command 26

Code 4-4 Sample Invocation of the `ctr_makerom` Command 26

Code 5-1 Sample Invocation of the `ctr_make_ex_banner` Command 30

Code 5-2 Sample Settings in an EBSF File 30

Code 5-3 Expanded Banner Data Structure 31

Code 5-4 Sample Invocation of the `ctr_makedlexbanner` Command 32

Code 6-1 Sample Implementation of an Expanded Save Data Icon 33

Code 7-1 Warning Message in Master Editor 34

Code 8-1 Sample Implementation When Creating a StreetPass Box 35

Code 9-1 Sample Implementation of StreetPass Messages 37

Tables

Table 2-1 Locations Using CTR Icons 9

Table 3-1 Sample Created CTR Icons 16

Table 4-1 Camera Parameters for Banners 19

Table 4-2 Data Names With Corresponding Markets and Languages 22

Table 4-3 Restrictions and Specifications for Intermediate Files Included in Model Data 23

Table 4-4 Restrictions on Audio Data Used by Banner Sounds 26

Table 5-1 Order in Which Contextual Banner Data Is Applied 28

Table 5-2 Texture Data Formats That Can Be Used by Contextual Banner Data 29

Table 10-1 Applications Affected by This Bug and Scheduled Fixes 40

Figures

Figure 2-1 CTR Icons 8

Figure 2-2 A CTR Title Banner 10

Figure 2-3 Expanded Save Data Icons 11

Figure 2-4 Icons for Download Play Child Programs 11

Figure 2-5 Icons for StreetPass Boxes 12

Figure 2-6 Icons for StreetPass Messages 12

Figure 3-1 Sample CTR Icon Display 15

Figure 4-1 Recommended Placement Range of the Title Portion 20

Figure 4-2 Examples of Spatial and Visual Contradictions Arising in the Relative Depths of Objects in a 3D Model 21

Figure 4-3 Directory Structure for Intermediate Files and Model Data 24

Figure 4-4 Template That Displays a Flat Polygon 25

Figure 4-5 Banner With Processing Load Measurement Bars 27

Figure 10-1 Close-Up of an Icon That Is Partially Corrupted 39

Figure 10-2 Underlying Cause of the Symptom 40

© 2012–2014 Nintendo

CONFIDENTIAL

1 Introduction

This document provides application developers with information related to icons and banners, which are required for CTR applications.

1.1 How to Read This Document

First, read Chapter 2 An Overview for an overview of icons and banners. Determine the types of icons and banners that are necessary based on your application's specifications.

Next, start reading at Chapter 3 How to Create CTR Icons to learn how to create each of the various icons and banners and to understand the related cautions. This document does not give detailed explanations of the tools used to create icons and banners. See the relevant manual for each tool.

Read Chapter 10 Notes and Precautions for supplementary information about bugs and other topics. Refer to this chapter as necessary.

2 An Overview of Icons and Banners

This chapter gives an overview of icons and banners by explaining which types are used by CTR applications as well as where and when they are used.

This chapter also describes the types of tools related to creating icons and banners to explain the procedures given in the following chapters.

2.1 Types of Icons and Banners

The icons and banners used by CTR applications can be grouped into the following categories.

- CTR icons
- CTR title banners
- CTR contextual banner data
- Expanded save data icons
- Icons for Download Play child programs
- Icons for StreetPass boxes
- Icons for StreetPass messages

The following sections explain where and how these icons and banners are used.

2.1.1 CTR Icons

The HOME Menu displays these icons on the lower screen. A CTR icon image includes both 48×48 and 24×24 image data, and switches smoothly between images according to the situation. They also include titles and other text information.

Figure 2-1 CTR Icons

CTR icons are used not only by the HOME Menu but also by the friend list and Activity Log in addition to other situations.

Table 2-1 Locations Using CTR Icons

Application	Location
HOME Menu	• The lower screen of the HOME Menu • The upper screen when an application is suspended
Friend List	• When the Favorite Title selection screen is displayed • When a game is displayed under Currently Playing
Notification Applet	• SpotPass notifications and notifications from general applications
Activity Log	• Activity Log • Software library
System Settings	• Software Management screen
StreetPass Mii Plaza	• Most Recent Software
Game Notes	• The image that appears for the suspended software
E-manual	• The top page of the e-manual
Nintendo 3DS System Transfer	• The list of software titles

Note: As with CTR icons, different-sized images are also used in printed materials for card-based software packages. A resolution of 384×384 (72 pixels/inch) is required for printed material. Use the same design as you do within your application. For more information, see the Printed Matter Guidelines for Software.

Icons were animated for Nintendo DSi software but not for CTR software. These icons cannot be switched by expanded save data such as CTR title banners.

CTR icons must be created for every title.

2.1.2 CTR Title Banners

These title banners are shown on the upper screen of the HOME Menu. 3D imagery is used to make the 3D models appear to be displayed in a showcase. The 3D model appears in the middle of a rotating oblate spheroid. The model rotates slowly. Rotation speed responds to microphone input audio.

When you select a CTR icon from the lower screen on the HOME Menu, the title banner is displayed on the upper screen and a banner sound is played back.

Figure 2-2 A CTR Title Banner

CTR contextual banner data (described later) allows you to replace some elements in the display.

CTR title banners must be created for all titles.

2.1.3 CTR Contextual Banner Data

You can replace some of the CTR title banner display elements with the content of CTR contextual banner data. You can replace textures and the scrolling text displayed at the bottom of the upper screen.

You cannot switch CTR icons and banner sounds.

There are two types of CTR contextual banner data: local contextual banners, which are created from applications, and downloadable contextual banners, which are downloaded via SpotPass.

2.1.3.1 Local Contextual Banners

Applications can save these banners within contextual banner data to apply them. These banners allow you to apply images that reflect in-game progress in addition to content specific to individual players.

2.1.3.2 Downloadable Contextual Banners

This contextual banner data is applied after it is distributed via SpotPass. Unlike local contextual banners, you can configure these banners to expire.

Local contextual banners and downloadable contextual banners can generally be applied together if they both exist at the same time, but downloadable contextual banners have higher priority when both banners are configured to switch the same content. For more information, see Chapter 5 How to Create CTR Contextual Banner Data.

You can use CTR contextual banner data however you like, including using it to change CTR title banners.

© 2012–2014 Nintendo

CONFIDENTIAL

2.1.4 Expanded Save Data Icons

These icons are displayed under Extra Data Management in System Settings.

Figure 2-3 Expanded Save Data Icons

You must create these for titles that use expanded save data.

2.1.5 Icons for Download Play Child Programs

These icons are displayed on systems that download child programs via Download Play.

Figure 2-4 Icons for Download Play Child Programs

You must create these for applications that use Download Play. Embed them for use in the Download Play child programs.

2.1.6 Icons for StreetPass Boxes

These icons appear in the StreetPass Management screen and Notifications List. Set them when you create StreetPass boxes for performing StreetPass communication.

Figure 2-5 Icons for StreetPass Boxes

You must create these icons for titles that use StreetPass.

2.1.7 Icons for StreetPass Messages

These icons are attached to messages exchanged via StreetPass. They appear under the Notifications List in the HOME Menu.

Figure 2-6 Icons for StreetPass Messages

You must create these for titles that use StreetPass.

2.2 Tools Required to Create Icons

The CTR-SDK and a special version of NintendoWare for CTR ("NW4C for Banner") provide the tools used to create icon and banner data. For more information about each of these tools, see the documentation in their respective packages.

© 2012–2014 Nintendo

CONFIDENTIAL

2.2.1 CTR-SDK

The CTR-SDK provides converter tools for various types of data.

2.2.1.1 ctr_TexturePackager

The `ctr_TexturePackager` tool loads TGA image files, converts them to a (compressed or uncompressed) texture format that can be used by CTR systems, and then creates a package file that combines multiple textures. This generates a texture package file with the `.ctpk` extension. This file is used when an icon is created.

Note: From CTR-SDK 3.2 onward, you do not need to use this tool because the `ctr_makebanner` tool can use NW4C TGA files and CTPK files directly.

You can also remove the header and padding regions from an NW4C TGA file to output it as binary data. You can use this binary data in icons for StreetPass boxes and StreetPass messages.

2.2.1.2 ctr_BannerModelConverter

The `ctr_BannerModelConverter` tool creates model data for CTR title banners. Convert the intermediate files output by CreativeStudio in NW4C for Banner to generate BCMDL data. Use the generated BCMDL data with `ctr_makebanner`.

2.2.1.3 ctr_WaveConverter

The `ctr_WaveConverter` tool converts ordinary waveform file formats (`.wav`, `.aif`, `.aiff`) to a CTR waveform file format (`.bcwav`). Use these converted files to create banner sounds for CTR title banners.

2.2.1.4 ctr_makebanner

The `ctr_makebanner` tool creates icon and banner data. In addition to the required texture, model, and sound data, prepare the title information to display with the icon and a BSF file with various settings denoted for when you generate icon and banner data. Use `ctr_makerom` to embed this generated icon and banner data into the executable binary.

2.2.1.5 ctr_makerom

The `ctr_makerom` tool creates executable binaries for CTR applications. Pass CTR icon and banner data as arguments to embed CTR icons and banners into executable binaries.

2.2.1.6 ctr_make_ex_banner

The `ctr_make_ex_banner` tool creates contextual banner data. Both common and language-specific BIN data are generated.

2.2.1.7 ctr_makedlexbanner

The `ctr_makedlexbanner` tool generates downloadable contextual banners. BIN data generated by `ctr_make_ex_banner` is converted into data that will be downloaded.

2.2.2 NintendoWare for CTR for Banner (Package for Creating Banner Data)

You must use a specific version of NW4C to create CTR title banners. To distinguish this package from the normal NW4C package, it is provided under the name "NW4C for Banner" (the banner creation package). These tools are based on NW4C 1.3.2.

2.2.2.1 CreativeStudio for Banner

CreativeStudio is a graphics IDE for the CTR system. With it, you can edit 3D model data output by Maya and other DCC tools through special plug-ins.

2.2.2.2 Adobe Photoshop Plug-Ins

These plug-ins create NW4C texture files from Adobe Photoshop. They output TGA files with additional, NW4C-specific information (called "NW4C TGA files").

2.2.2.3 Autodesk Maya, 3ds Max, and Softimage Plug-Ins

These plug-ins output 3D intermediate files from general-purpose 3D graphics tools: Autodesk Maya, 3ds Max, and Softimage. Edit these intermediate files in CreativeStudio.

2.2.2.4 Viewer (Hardware Viewer)

With Viewer, you can use a CTR system to display data created by the tools and plug-ins provided by NW4C. After you have edited data with the various tools, you can transfer it to Viewer through HIO-Daemon and then preview it.

Note: The HOME Menu is implemented using NW4C 1.2.23 and might exhibit slight disparities from the results that have been confirmed using the NW4C for Banner package based on NW4C 1.3.2.

Although no such differences have been found in the displayed results, always use the HOME Menu for your final checks. For more information about how to check data in the HOME Menu, see the manuals included with the CTR-SDK.

© 2012–2014 Nintendo

CONFIDENTIAL

3 How to Create CTR Icons

Create a CTR icon as follows.

1. Prepare both small and large image data to use in the CTR icon.
2. Use `ctr_TexturePackager` to convert the CTR icon image data to the CTPK format.
3. Pass the image data to `ctr_makebanner` to create ICN data.
4. Pass the ICN data to `ctr_makerom` to embed it in a ROM.

The following sections explain each of these steps.

3.1 Prepare the Icon Images

To create a CTR icon for a CTR application, you must provide both a large (48×48) CTR icon and a small (24×24) CTR icon in the TGA format.

Note: You can use NW4C TGA files along with CTR-SDK version 3.2 or later to reduce the amount of work you must do. Nintendo recommends that you use the Photoshop plug-in in NW4C for Banner to save files in the NW4C TGA format.

Each of the image types is used to represent the application with an appropriate size. They are generally assumed to be the same image, so treat the small CTR icon as simply a miniaturized version of the large CTR icon.

For example, CTR icons shown on the HOME Menu grow and shrink as the HOME Menu layout is changed on the lower screen due to user operation. Something would seem amiss if the large and small CTR icons were to use entirely different images.

Figure 3-1 Sample CTR Icon Display

(a) 1 行表示バージョン
(48px * 48px)

(b) 5 行表示バージョン
(24px * 24px)

When you shrink a large CTR icon to create a small one, you may touch up a few pixels in the small icon to get rid of moiré patterns and other artifacts. However, you cannot use a small icon that is just a part of the large icon, or one that has different colors or shapes.

Table 3-1 Sample Created CTR Icons

Icon	Size	Allowed?	Description
	Large	Yes	The original (large) icon.
	Small	Yes	An icon that has been shrunk and touched up by hand.
	Small	No	An icon that is only part of the original image.
	Small	No	An icon with different colors and shapes than the original icon.

3.1.1 Notes

As with CTR icons images, different-sized icons are also used in printed material for card-based software packages. A resolution of 384×384 (72 pixels/inch) is required for printed material. Use the same design as you do within your application. For more information, see the Software Printed Matter Guidelines.

Icons for expanded save data and downloadable child programs use the same data format as CTR icons. The small images used for these icons are assumed to be scaled-down—but otherwise identical—versions of the large images and must comply with these restrictions.

Parts of a CTR icon are sometimes not displayed correctly. For more information, see Section 10.1 Bug Where Parts of an Icon Are Displayed Incorrectly.

3.2 Convert and Compress the Images

Use `ctr_TexturePackager` to convert both the large and small (TGA) CTR icon image data created in the previous section into the CTPK format. For example, you could run the command as follows.

Code 3-1 Sample Invocations of `ctr_TexturePackager`

```
% ctr_TexturePackager.exe -l icon_large.tga -dsl
% ctr_TexturePackager.exe -l icon_small.tga -dsl
```

Note: You do not need to do this if you are using at least version 3.2 of the CTR-SDK and have saved your image data in the NW4C TGA format.

© 2012–2014 Nintendo

CONFIDENTIAL

3.3 Create the Icon Data

Pass the image data created in the last section to `ctr_makebanner` to create an ICN file. When you do so, fill out a configurations file called a banner spec file (BSF file).

3.3.1 Configure the Banner Spec File

Within the BSF file is the basic application information, such as its title and information on the publisher. This information appears in the HOME Menu, friend cards, the Activity Log, and elsewhere. The BSF file also has other information, some of which is related to the specifications of an application. This information affects Parental Controls and other operations.

This section only describes image data settings related to the procedure up to the previous section. For information about other settings, see `$CTR_SDK/documents/tools/ctr_makebanner.html` in the CTR-SDK. Use settings that are relevant to the specifications of your application.

Set the Image Data

Specify the image data that you created in the last section to the BSF file.

Code 3-2 Sample BSF File Content

```
BigIconFile:    icon_large.ctpk    # Filename for the 48x48 icon
LittleIconFile: icon_small.ctpk    # Filename for the 24x24 icon
```

Note: If you are using version 3.2 or later of the CTR-SDK, you can specify an NW4C TGA file directly. If you are using an earlier version of `ctr_makebanner`, specify the CTPK file created in the previous section.

3.3.2 Use ctr_makebanner

After you have prepared a BSF file, use `ctr_makebanner` to create an ICN file.

Code 3-3 Sample Invocation of the `ctr_makebanner` Command

```
ctr_makebanner32 -nobnr BannerSpec.bsf icon_file.icn
```

Note: For the sake of simplicity, the command in this sample only creates CTR icon data. You would ordinarily create both CTR icon and banner data at the same time.

3.4 Embed in the ROM

Use `ctr_makerom` to embed the ICN data that you created in the last section in a ROM.

Code 3-4 Sample Invocation of the `ctr_makerom` Command

```
% ctr_makerom -icon icon_file.icn
```

You are now done creating and embedding a CTR icon.

3.5 Icon Database and Cache

The CTR system has an icon database that saves information about CTR icons. After you register the information about a CTR icon to the icon database, the Activity Log and other built-in system applications can use it. CTR icon information is registered to the icon database at the following times.

- Icon data is obtained from an application and then saved when the application is launched on the system.
- Icon data is saved when it is received via StreetPass.
- Icon data is downloaded from an icon database server on the network and saved on a system when that system has never launched a Favorite Title specified by a friend in the friend list. If a friend has set an application from another region, the icon data of that region is saved. An icon is not saved in the icon database for the game that a friend is currently playing.

Icon data is registered to the icon database on the network when an application passes Lotcheck. If the same title is released in more than one region, Lotcheck accepts the title of each region as a separate application. As a result, the same icon does not appear in all regions until after the title has passed Lotcheck for all of those regions.

If you change the system region on development hardware or elsewhere with version 3 or earlier of the SDK, the icon data that had been registered to the icon database for the previous region is preserved unless you initialize the system. (Version 4.0 and later of the SDK force a system initialization when the region is changed, clearing the icon database.)

After an icon has been registered to the icon database, the icon information of its application can be referenced from the icon database. In other words, if in the process of creating an icon you modify it and attempt to view the result, you see the icon that was previously registered to the database. To see your modifications to an icon during debugging or at some other time, you must clear the icon database. You can clear the icon database by holding down the X and Y Buttons when you launch the HOME Menu. If the database has been cleared successfully, a dialog box appears after the HOME Menu was launched to tell you that save data is being initialized.

The icon cache is a collection of icon data that is temporarily saved on an SD Card to enable the HOME Menu to load icons more quickly. Once icon data is saved in this cache, it is used until the cache is explicitly cleared. You can clear the icon cache just like the icon database, by holding down the X and Y Buttons when you launch the HOME Menu.

© 2012–2014 Nintendo

CONFIDENTIAL

4 How to Create CTR Title Banners

Create a CTR title banner as follows.

1. Create banner model data.
2. Create banner sound data.
3. Pass the model and sound data to `ctr_makebanner` to generate BNR data.
4. Pass the BNR data to `ctr_makerom` to embed it in a ROM.
5. Use the debugging features of the HOME Menu to check the processor load.

The following sections explain each of these steps.

4.1 Create Banner Model Data

After model data has been created by CreativeStudio and converted to BCMDL files by `ctr_BannerModelConverter`, the resulting binary data is used for CTR title banners.

Note: You must use model data that has been created with the NW4C for Banner package.

4.1.1 Rotate the Model

3D models rotate clockwise (once every ten seconds) around the vertical axis of the screen. If you do not want to rotate a node, either use billboarding or rotate it in the opposite direction (counter-clockwise at the same speed).

The rotation speed varies with the input microphone volume (under the assumption that players will blow into the microphone). When this happens, the rotation does not affect nodes that are being used as billboards but it does affect nodes that are rotating in the opposite direction.

4.1.2 Adjust the View Range and Parallax

When you create a CTR title banner, configure the parameters of the camera with the values in Table 4-1.

Table 4-1 Camera Parameters for Banners

Parameter	Value
Position	X : 0, Y : 1, Z : 44.786
Focal point	X : 0, Y : 1, Z : 0
Mode	Persp
Fovy	30
Aspect	1.666667
Near	26.5

Parameter	Value
Far	10000
ULCD range	34.786 (+10 from the origin is the base plane)
ULCD factor	1.0

3D models placed outside of the space of the spheroid are not visible. Do not allow your model to hit the edge of the screen when the 3D depth slider is moved to its maximum value.

The HOME Menu switches the title banner shown on the upper screen when the user selects a different application on the lower screen. The user would find it uncomfortable to see the parallax vary widely from one application to the next. Nintendo recommends placing the title of the 3D model—which the user is particularly likely to focus on—somewhere between 0.0 and 9.0 on the z-axis, just like the built-in applications. The base plane, and by extension the screen of the CTR system, is located at a z-coordinate of 10.0.

Figure 4-1 Recommended Placement Range of the Title Portion

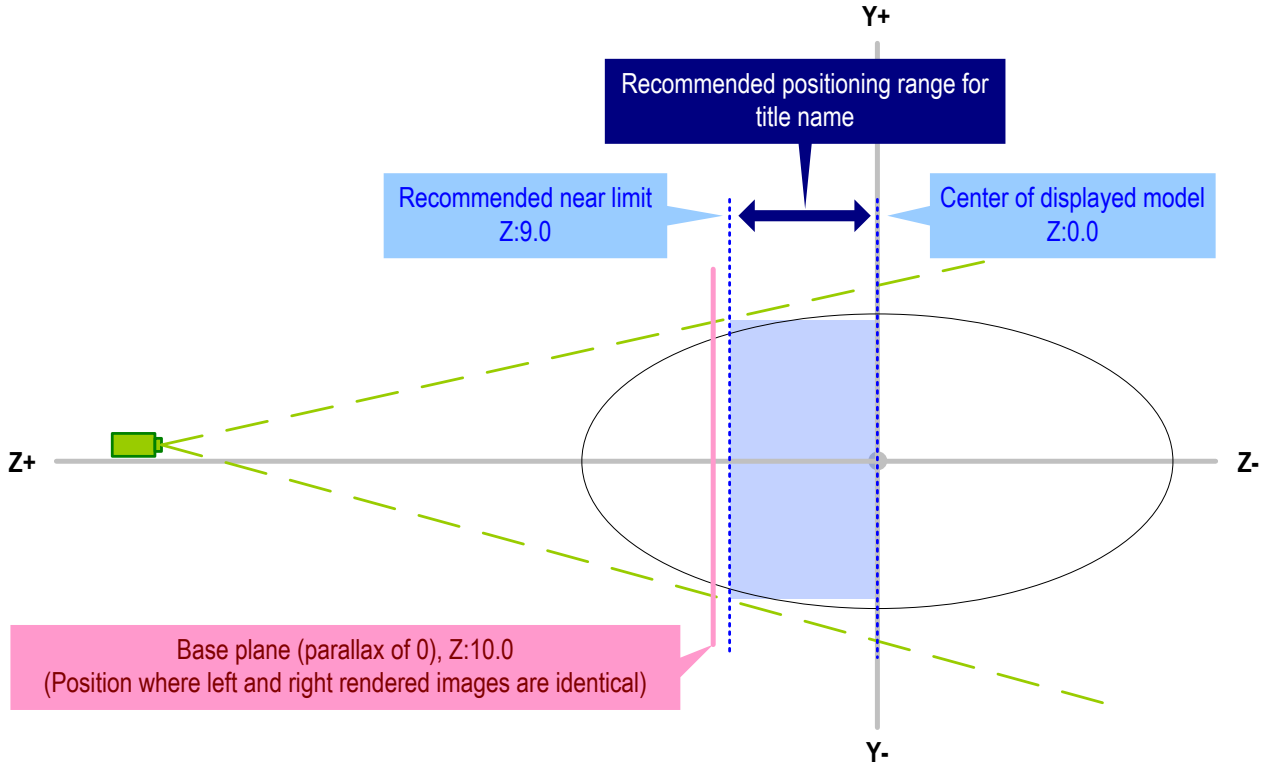

Some rendering priority settings for the 3D model may cause contradictions in the relative depths of objects in the 3D model, either spatially through their placement in 3D space or visually through the screen. Showing 3D models that use parallax and have these contradictions causes discomfort for the user. To avoid this problem, prevent both spatial and visual contradictions in the relative depths of objects.

© 2012–2014 Nintendo

CONFIDENTIAL

Figure 4-2 Examples of Spatial and Visual Contradictions Arising in the Relative Depths of Objects in a 3D Model

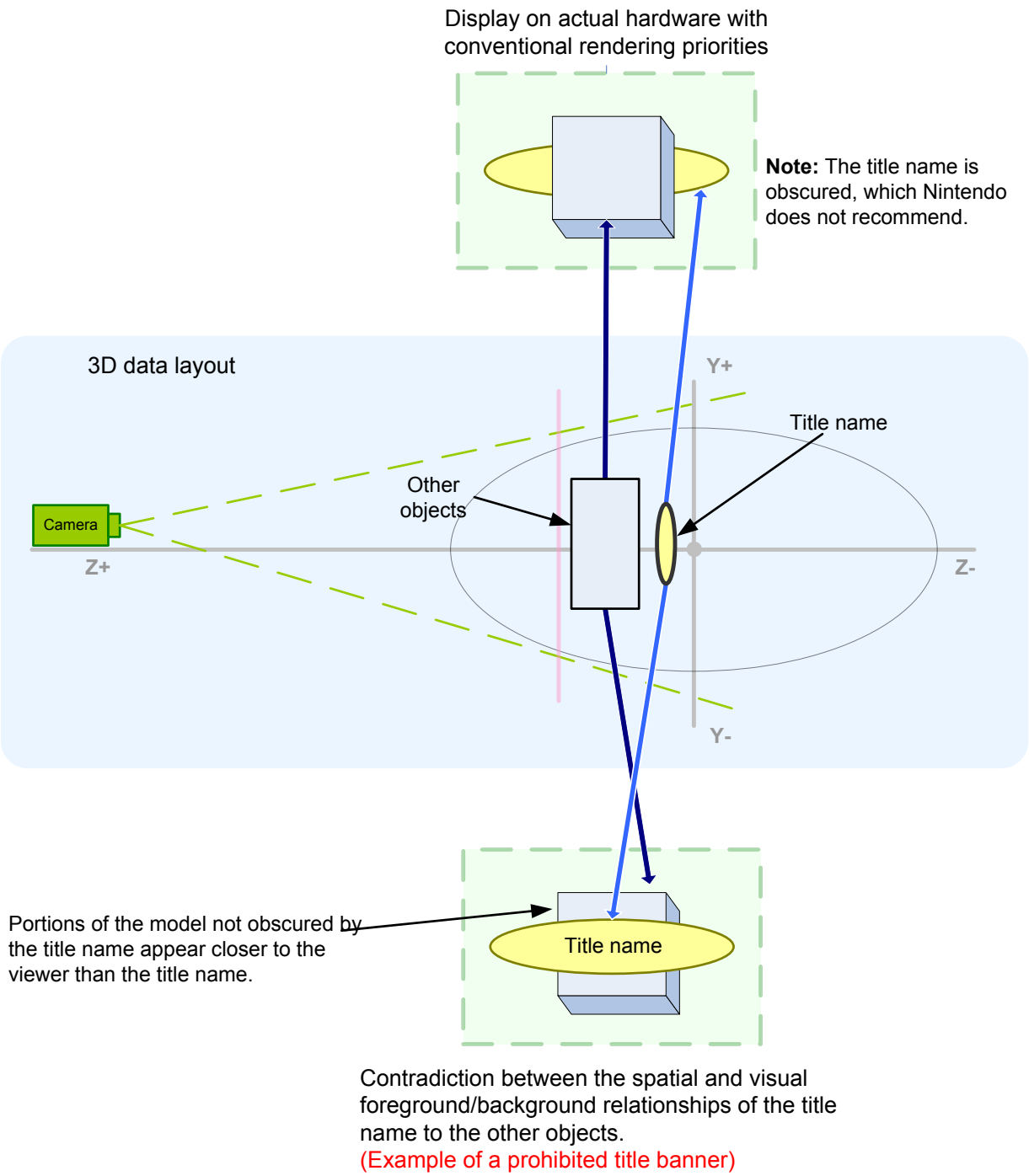

4.1.3 Support for Language Settings

3D models have both common data that is shown for all language settings and language-specific data that varies with individual language settings. You must prepare language-specific data for all languages that are valid in your software's market.

If you have prepared different 3D models for the common data and the language-specific data, both are shown. If both language-specific data and common data have a texture with the same name, the language-specific version is shown. In other words, you must use language-specific data to show different models for different languages and to paste different textures on the common data model.

Be careful if you are considering a demo for a networked interactive retail display (IRD). For more information, see Section 10.2 Bug in Menus Displayed for Demos on Networked Interactive Retail Displays.

4.1.4 Title Name Notation

Title banners are used to show the user which type of application is selected in the lower screen. You must include the title of your application in its 3D model because the HOME Menu does not show the title of the application on the lower screen when the user has rearranged the layout to use two or more rows of CTR icons.

This restriction is intended to prevent the user from losing track of which application is selected. It is not necessary to show the precise title correctly. You may, however, use abbreviations and change some notation (from "2" to "II", for instance).

Nintendo recommends, but does not require, that you show the title in each of the languages supported by your application. If you plan to use only a single 3D model to support every language, use the file specified as the English title in the BSF file.

To make the title more recognizable, Nintendo recommends configuring the title as a non-rotating billboard that is easier to see than other parts of the 3D model.

4.1.5 Data Naming Conventions

Data is named using a combination of the market and language of your software. With the exception of consecutively-numbered texture data, data for the same market and language must use the same name for all file extensions.

Table 4-2 Data Names With Corresponding Markets and Languages

Name	Market	Language
`COMMON`	(Common to all markets)	(Common to all languages)
`JPN_JP`	Japan	Japanese
`USA_EN`	The Americas	North American English
`USA_FR`	The Americas	French (Canada)

© 2012–2014 Nintendo

CONFIDENTIAL

Name	Market	Language
USA_SP	The Americas	Spanish (Latin America)
USA_PO	The Americas	Portuguese (Brazil)
EUR_EN	Europe	British English
EUR_FR	Europe	French
EUR_GE	Europe	German
EUR_SP	Europe	Spanish
EUR_IT	Europe	Italian
EUR_DU	Europe	Dutch
EUR_PO	Europe	Portuguese
EUR_RU	Europe	Russian
CHN_CN	China	Simplified Chinese
KOR_KR	Korea	Korean
TWN_TW	Taiwan and Hong Kong	Traditional Chinese

4.1.6 Intermediate File Restrictions

The intermediate files included the model data have the following restrictions. These restrictions apply to models that are displayed when there is a combination of common data and data specific to one language. You cannot use any intermediate data with an extension that is not in the table because it is unsupported. The default shader is used to display the model.

Table 4-3 Restrictions and Specifications for Intermediate Files Included in Model Data

File Extension	Restrictions and Specifications
.cmdl	Create models with no more than 3000 polygons, 5 bones, and 5 materials. You can choose from four layer configurations (with one cycle): 0, 1, 2, and 3. You cannot use stencil tests.
.ctex	Apart from capacity restrictions, you can use as many of these as you want. Textures in the language-specific data replace textures with the same name in the common data that are pasted onto models.
.cskla	Create a looping animation of no more than 600 frames. This animation is rendered at 60 frames per second.
.amata	Create a looping animation of no more than 600 frames. This animation is rendered at 60 frames per second.

File Extension	Restrictions and Specifications
`.cenv`	You cannot specify three lights, three cameras, or a fog object. Previously, fog objects were limited to one, but it was discovered that fog objects were not reflected with the HOME Menu. Revisions were made so that an error is generated with makebanner for CTR-SDK 7.1 or later.
`.clts`	You can use up to three lookup tables.
`.cptl`	Particles are not supported. You do not need this file.
`.csdr`	User shaders are not supported. You do not need this file.
`.clgt`	Use `.cenv` for light settings. Light animations are not supported. You do not need this file.
`.ccam`	Use `.cenv` for camera settings. Camera animations are not supported. You do not need this file.
`.cres`	Consolidated files are not supported. You do not need this file.

Create directories for each market/language combination and then place intermediate files under them, as follows. Place language-specific texture data in the `Textures` directory—separately from the language-specific model data—using filenames such as `COMMON1.ctex`. This language-specific texture data replaces textures in the common data.

Figure 4-3 Directory Structure for Intermediate Files and Model Data

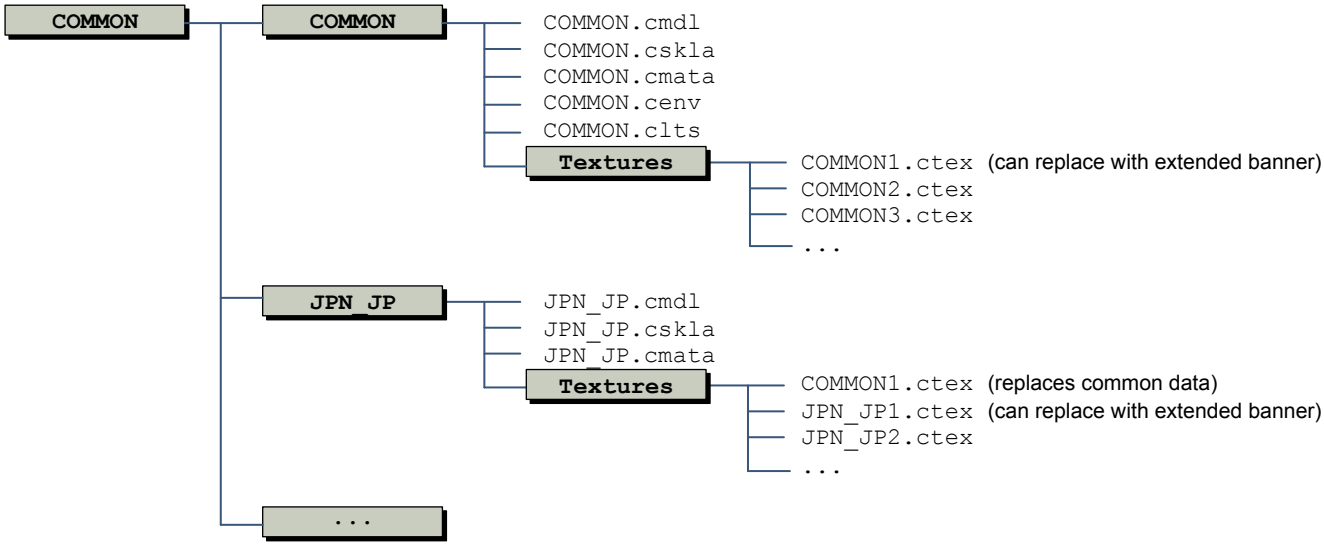

A 3D model can use any number of textures in any format, but the total size of the uncompressed model data (the common data and data for a single language) cannot be more than 256 KB.

All of the compressed data (the entire banner, including common data, all language-specific data, and banner sounds) must not exceed 1 MB.

4.1.7 Miscellaneous

Nintendo is providing a flat polygon as a template for developers who are not familiar with how to create 3D models. You can simply create a texture and paste it onto the polygon to display it.

Figure 4-4 Template That Displays a Flat Polygon

4.1.8 Convert the Intermediate Data to Model Data

After you finish editing the model data in CreativeStudio, use `ctr_BannerModelConverter` to create CBMDL data. Specify the name of the folder where the intermediate files of the model data are stored as an argument.

Code 4-1 Convert to Model Data

```
ctr_BannerModelConverter32.exe BannerModelFolder
```

4.2 Create Banner Sound Data

When you select the CTR icon of an application from the HOME Menu, the banner of that applicationappears on the upper screen and a banner sound is played. This indicates to the user that the application is selected and can be launched. You must play an application-specific sound when its title banner appears. You cannot register sample data provided by Nintendo or files without sound.

To create a banner sound, use `ctr_WaveConverter` to convert audio data that conforms to the following restrictions into the BCWAV format.

Your banner sound must use approximately the same volume as system applications. You cannot synchronize banner sound playback with the movements of the 3D model. The banner sound is played back slightly after the banner appears, so you do not need any blank space at the beginning of the sound. There is only one type of banner sound; it is not language-dependent.

Note: A banner sound is played back in front bypass mode. It is played back in stereo even when surround sound is not configured in System Settings.

The following restrictions apply to the audio data used by banner sounds.

Table 4-4 Restrictions on Audio Data Used by Banner Sounds

Property	Restrictions
Length	No more than three seconds
Source file format	WAV or AIF
Number of channels	Stereo only
Compression method	DSP ADPCM, PCM16, or PCM8
Sampling rate	Any
Miscellaneous	No looping

4.3 Create Banner Data

Use `ctr_makebanner` to combine the banner model data and banner sound data that you have created in the previous sections to create BNR data. Specify the filenames for the banner model data and banner sound data in your BSF file.

Code 4-2 Sample BSF File Denotation

```
ModelFile:      banner_model.cbmd    # Banner model filename
SoundFile:      banner_sound.bcwav   # Sound filename
```

These are the only settings in the BSF file that you need to create banner data, but you must still configure other settings in the BSF file as appropriate. For more information, see `$CTR_SDK/documents/tools/ctr_makebanner.html` in the CTR-SDK. Use settings that are relevant to the specifications of your application.

After you prepare a BSF file, use `ctr_makebanner` to create a BNR file.

Code 4-3 Sample Invocation of the `ctr_makebanner` Command

```
ctr_makebanner32 -noicn BannerSpec.bsf banner_file.bnr
```

Note: For the sake of simplicity, the command in this sample only creates banner data. You would ordinarily create both icon and banner data at the same time.

4.4 Embed in the ROM

Pass the BNR data that you created in the last section as an argument to `ctr_makerom` when you build your application.

Code 4-4 Sample Invocation of the `ctr_makerom` Command

```
% ctr_makerom -banner banner_file.bnr
```

You are now done creating and embedding a CTR title banner.

© 2012–2014 Nintendo

CONFIDENTIAL

4.5 Check the Processing Load

By pressing the X and Y Buttons simultaneously at the HOME Menu, you can show a banner that measures banner processing on the upper screen.

Figure 4-5 Banner With Processing Load Measurement Bars

The length of the first bar on top represents 100% processor use in a single frame (for comparison). The second bar represents processing with the CPU and the third bar represents processing with the GPU. A green bar indicates less than 75% processing, a yellow bar indicates 75–80% processing, and a red bar indicates more than 80% processing. Keep these bars green and yellow while the banner of your application is shown. Revise your banner if any of the bars turn red.

Check the processing load in the following situations, because it may vary.

- When the model rotates slowly, changing its appearance (to face backwards, for example).
- When a model rotates quickly in response to microphone input.
- When textures are changed and text displayed by contextual banner data.

5 How to Create CTR Contextual Banner Data

There are two types of CTR contextual banner data: local contextual banners and downloadable contextual banners.

To create a local contextual banner, you can either create the banner data in advance and then write it to the expanded save data, or your application can dynamically create the banner data and then write it to expanded save data.

You follow almost the same steps to create downloadable contextual banner data as you do to create local contextual banner data in advance.

5.1 Replaceable Data

CTR contextual banners allow you to modify elements of your CTR title banners: you can replace the texture data used in your 3D models and add text that scrolls across the bottom of the upper screen.

CTR contextual banner data can store one instance of texture data and one instance of text data. You can also use just one or the other. Texture data also includes information that specifies which texture it replaces. Text data does not include information that specifies what it replaces, because it only replaces a single location at the bottom of the upper screen.

There are two types of CTR contextual banner data: local contextual banners, which are created from applications, and downloadable contextual banners, which are downloaded via SpotPass. When CTR contextual banner data replaces elements of a CTR title banner, local contextual banners and downloadable contextual banners are applied independently. Downloadable contextual banners take priority over local contextual banners and are applied when both banners are supposed to replace the same thing.

Like banner model data for CTR title banners, CTR contextual banner data comprises both common data for all language settings and language-specific data for individual language settings. When CTR contextual banner data replaces elements of a CTR title banner, common data and language-specific data are applied independently. Language-specific data takes priority over common data and is applied when they are both supposed to replace the same thing.

When you use local contextual banners, downloadable contextual banners, common data, and language-specific data together, they are given the following priorities when replacing the same element.

Table 5-1 Order in Which Contextual Banner Data Is Applied

Priority	Applied Data
1	Language-specific data in downloadable contextual banners.
2	Common data in downloadable contextual banners.
3	Language-specific data in local contextual banners.

© 2012–2014 Nintendo

CONFIDENTIAL

Priority	Applied Data
4	Common data in local contextual banners.
5	The original data in the CTR title banner.

On the other hand, if different elements are being replaced, the contextual banner data at priorities 1–4 above are replaced simultaneously. Up to four textures can be replaced at one time.

Note: Be careful when you are considering replacing the texture data in the contextual banner. For more information, see Section 10.3 Bug That Causes the Home Menu to Freeze When Replacing Texture Data in the CTR Contextual Banner.

5.2 How to Create Replacement Data

5.2.1 Replacement Texture Data

Prepare replacement texture data as binary data in the following formats. The texture data must have the same resolution as the texture it is replacing, with a width and height that are both powers of 2 from 8 to 1024.

To create binary data, output NW4C TGA files with the Adobe Photoshop plug-in in NW4C for Banner, and then remove the header and padding region by specifying the `-dsl` option to `ctr_TexturePackager`.

Note: Starting with version 3.2 of the CTR-SDK, `ctr_make_ex_banner` can directly use NW4C TGA files as texture data.

Table 5-2 Texture Data Formats That Can Be Used by Contextual Banner Data

Format	Description
`RGBA8`	4 bytes per pixel, with 8-bit RGBA channels.
`RGB8`	3 bytes per pixel, with 8-bit RGB channels.
`RGBA5551`	2 bytes per pixel, with 5-bit RGB channels and a 1-bit alpha channel.
`RGB565`	2 bytes per pixel, with a 5-bit R channel, 6-bit G channel, and 5-bit B channel.
`RGBA4`	2 bytes per pixel, with 4-bit RGBA channels.
`LA8`	2 bytes per pixel, with 8-bit alpha and luminance channels.
`HILO8`	2 bytes per pixel, with 8-bit X and Y channels.
`L8`	1 byte per pixel, with an 8-bit luminance channel.
`A8`	1 byte per pixel, with an 8-bit alpha channel.
`LA4`	1 byte per pixel, with 4-bit alpha and luminance channels.
`L4`	4 bits per pixel, with a 4-bit luminance channel.

Format	Description
A4	4 bits per pixel, with a 4-bit alpha channel.
ETC1	A compressed format with the equivalent of 4 bits per pixel.
ETC1A4	A compressed format with the equivalent of 8 bits per pixel.

If your application creates local expanded save data dynamically, arrange it using one of these data formats. These formats are native hardware formats and can be used by images (textures) that are rendered to the framebuffer.

5.2.2 Replacement Text

Replacement text can have up to 255 characters. It appears unchanged if it is short enough to fit on the screen, and it scrolls if it is too long.

Note: If the text is just barely too long to fit on the screen, it may not scroll and may be partially hidden. This functionality is dictated by the specifications of the HOME Menu. To work around this problem, avoid using strings that are just barely too long to fit on the screen, or add extra characters such as blank spaces to the end of your strings.

For more information about the replacement characters you can use, see the reference page for the `ctr_make_ex_banner` tool (`$CTR_SDK/documents/tools/Exbanner.html`).

5.3 Statically Creating Local Contextual Banner Data

One way to create local contextual banner data is to create a binary with the contextual banner data in advance and save it in the ROM for your application, and then write the binary to the expanded save data.

Use the `ctr_make_ex_banner` tool. Specify the required settings in an EBSF file and then use `ctr_make_ex_banner` to output binary data (a BIN file). You can set an expiration date in your EBSF file, but local contextual banners will ignore it.

Code 5-1 Sample Invocation of the `ctr_make_ex_banner` Command

```
% ctr_make_ex_banner32.exe EX_BANNER_SPEC_FILE [OUTPUT_DIRECTORY]
```

Code 5-2 Sample Settings in an EBSF File

```
FileName:JPN_JP
TexWidth:64
TexHeight:64
TexFormat:RGBA4
TextureName:sampleTexture
Text: Sample text
TextureDataFileName:./img/sample.tex
```

BIN files are created for either common or language-specific data. You do not need to create contextual banner data for all the languages that are supported in your market; you may simply create

© 2012–2014 Nintendo

CONFIDENTIAL

contextual banner data for the languages that you want to replace. This is not required for common data, either. Each BIN file that you use as a local contextual banner must be 128 KB or less.

To use these BIN files in your application, place them under a top-level directory named `ExBanner` in your expanded save data. This practice allows the HOME Menu to search for banners in expanded save data and then replace the banner that is displayed.

Change the BIN files in the expanded save data to change which data is replaced. To stop replacing data, remove the corresponding BIN file from the expanded save data.

5.4 Dynamically Creating Local Contextual Banner Data

The previous section explained how to create binary data in advance with the `ctr_make_ex_banner` tool. Applications can also dynamically create binary data to use as local contextual banner data. This functionality allows you to apply user names, in-game screenshots, and other user-specific data to a banner.

Follow the same steps as you would to create local contextual banner data statically, up through creating expanded save data and the `ExBanner` directory. Save binary data for the structure shown in Code 5-3 (and defined by `$CTR_SDK/include/nn/pl/CTR/pl_ExBanner.h`) in BIN files in that directory. Fill unused elements in the structure with zeros. A variable-length array starts at `tex_data`. Use it to place the texture data described in Section 5.2.1 Replacement Texture Data.

As when you create data statically, you must create a BIN file for common or language-specific data, each BIN file must be no larger than 128 KB, and BIN files must be modified or deleted to change the content that is replaced or to stop replacing it altogether.

Code 5-3 Expanded Banner Data Structure

```
struct ExBanner
{
  u16 tex_width;              // Texture width
  u16 tex_height;             // Texture height
  u8 tex_format;              // Texture format
                              // (nn::pl::CTR::ExBannerTexFormat)
  u8 pad[3];

  s32 limit_year;             // Expiration date (at 11:59 p.m.)
  s32 limit_month;            // However, this is ignored by local
                              // contextual banners
  s32 limit_date;

  char texture_name[16];      // Texture name to overwrite
  wchar_t text[256];          // Contextual banner message
  void *tex_data;             // Variable-length; the beginning of the
                              // texture data
};
```

5.5 Creating Downloadable Contextual Banner Data

You can use the `ctr_makedlexbanner` tool to combine the BIN data you created for individual languages in Section 5.3 Statically Creating Local Contextual Banner Data and create downloadable contextual banner data. The downloadable contextual banner data must be no larger than 1 MB.

Code 5-4 Sample Invocation of the `ctr_makedlexbanner` Command

```
% ctr_makedlexbanner32.exe EXBNR_BIN_DIRECTORY_PATH [OUTPUT_FILE_NAME]
```

For more information about using `ctr_makedlexbanner`, see `$CTR_SDK/documents/tools/ctr_makedlexbanner.html` in the CTR-SDK.

You can register the BIN files that you create with the BOSS server, using contextual banner data to change the banner when your application initiates a download.

5.6 Banner and Application Settings

If you use a CTR contextual banner to switch CTR title banner elements, you must set the `ExBanner` flag in your BSF file when you create the CTR title banner. For more information, see `$CTR_SDK/documents/tools/ctr_makebanner.html` in the CTR-SDK.

Your application must create expanded save data when it uses local contextual banners. For more information, see the *CTR Programming Manual: System*. If you are using expanded save data, you must configure `UseExtSaveData` and `ExtSaveDataNumber` in your RSF file when you build your application. For more information, see `$CTR_SDK/documents/tools/ctr_makerom.html` in the CTR-SDK.

Your application must be able to handle BOSS download tasks when it uses downloadable contextual banners. For more information, see the *CTR Programming Manual: Wireless Communication*. You must also apply to use the BOSS server. For information about how to apply, contact support@noa.com.

© 2012–2014 Nintendo

CONFIDENTIAL

6 How to Create Expanded Save Data Icons

You can create icons for expanded save data using the same procedure as you would use for CTR icons. See Chapter 3 How to Create CTR Icons for specific instructions. This chapter explains how expanded data icons differ from CTR icons, and how to implement expanded save data icons.

6.1 Creating Expanded Save Data Icons

You can create icons for expanded save data using the same procedure as you would for a CTR icon. As a result, you may use the same data as you would for CTR title icons if you do not have a problem with the title and other information that is displayed.

Note: Parts of an expanded save data icon are sometimes not displayed correctly. For more information, see Section 10.1 Bug Where Parts of an Icon Are Displayed Incorrectly.

On the other hand, you can also create and use data that differs from the data for CTR title icons. Although you may change the design, title, and other properties of an icon to fit the nature of the expanded save data, Nintendo recommends that you make it easy to determine which application the data is associated with. This practice is desirable because expanded save data is managed independently of applications; it must be easy to determine whether it is okay to delete the expanded save data.

In particular, when multiple game titles share expanded save data, Nintendo recommends configuring the expanded save data icon with a design and name that is easy to associate with its game title.

6.2 Implementing Expanded Save Data Icons

Store the ICN data for the expanded save data icon within the ROM data of the application, and then use it when you create the expanded save data.

Code 6-1 Sample Implementation of an Expanded Save Data Icon

```
// Read the ICN file from the ROM archive
nn::fs::FileInputStream fileStream(L"rom:/ExtSaveData.icn");
size_t iconSize = fileStream.GetSize();
void* iconDataBuffer = s_ExtHeap.Allocate(iconSize);
fileStream.Read(iconDataBuffer, iconSize);

// Create the expanded save data
nn::fs::ExtSaveDataId extSaveDataId = 0xFFFFF;
u32 maxDirectories = 8;
u32 maxFiles = 8;
result = nn::fs::CreateExtSaveData(extSaveDataId, iconDataBuffer, iconSize,
maxDirectories, maxFiles);
if(result.IsFailure())
{
    // Handle any errors that occurred in the process of creating expanded
    // save data
}
```

You can only configure expanded save data icons when you create the data. You cannot change them later.

7 How to Create Icons for Download Play Child Programs

You can create icons for Download Play child programs using the same procedure as you would use for CTR icons. See Chapter 3 How to Create CTR Icons for specific instructions. This chapter explains how icons for Download Play child programs differ from CTR icons at creation.

7.1 Creating Icons for Download Play Child Programs

You create icon data using the same procedure as you would for a CTR icon.

The title (name) of a CTR icon must be set properly in all regions because StreetPass may cause CTR icons to appear on CTR systems from other regions. However, Download Play is not established between a host and client system from different regions. (The client system cannot find the host system while scanning). As a result, the titles (names) set in an icon for a Download Play child program can simply handle the languages for the region supported by that software.

Note: Parts of an icon for a Download Play child program are sometimes displayed incorrectly. For more information, see Section 10.1 Bug Where Parts of an Icon Are Displayed Incorrectly.

7.2 Implementing Icons for Download Play Child Programs

Pass the icon as an argument to `ctr_makerom` when you build the Download Play child program.

7.3 Banner Data for Download Play Child Programs

Download Play child programs are never launched directly from the HOME Menu and, as a result, CTR title banners do not have the opportunity to be displayed. For this reason and to reduce the download size, Nintendo recommends against embedding banner data in your ROM.

If you omit the `-banner` option when you run `makerom`, banner data is not embedded in your ROM.

The following warning message appears if banner data is embedded in your Download Play child program when you check it with Master Editor. As explained in the warning message, you may include banner data in your ROM if you want to.

Code 7-1 Warning Message in Master Editor

```
This ROM has BNR data. Download Play child programs do not need BNR data.
Although you may choose to include this data, it is unnecessary and will
not be used. Ignore this message if you want to include the BNR data.
```


© 2012–2014 Nintendo

CONFIDENTIAL

8 How to Create Icons for StreetPass Boxes

StreetPass boxes use normal texture data for their icons. Set these icons when applications create StreetPass boxes.

8.1 Creating Icons

Prepare a 48×48-pixel texture in the (little-endian) RGB565 native PICA format to use as an icon. To create texture data, output NW4C TGA files in the format specified by the Adobe Photoshop plug-in in NW4C for Banner, and then remove the header and padding region by specifying the `-dsl` option to `ctr_TexturePackager`.

Note: For information about native PICA formats, see the *CTR Programming Manual: Basic Graphics*.

Although you would ordinary use an icon of your game title, you may also use an icon that represents a series of game titles when your StreetPass box is shared by multiple games in a series.

Note: Parts of the icon for a StreetPass boxare sometimes displayed incorrectly. For more information, see Section 10.1 Bug Where Parts of an Icon Are Displayed Incorrectly.

8.2 Implementing Icons

8.2.1 Creating a StreetPass Box

Call the `nn::cec::MessageBox::CreateMessageBox` function to create a StreetPass box. Pass the texture data of your icon as an argument to this function.

Code 8-1 Sample Implementation When Creating a StreetPass Box

```
// Prepare the icon data
u16 iconData[48*48];
memset(iconData, 0xf0f0, sizeof(iconData)); // Create a simple texture with
                                            // only one color

// Create a StreetPass box
u32 cecTitleId = nn::cec::MakeCecTitleId(0x12345); // StreetPass ID
u32 privateId = 0xaabbccdd; // Private ID (the box's key)
char hmacKey[] = "12345678901234567890123456789012";  // Message key
wchar_t boxName[] = L"SampleMessageBox"; // Box name

result = cecMessageBox.CreateMessageBox(
            cecTitleId, privateId, hmacKey,
            iconData, sizeof(iconData),
            boxName, sizeof(boxName) );
```

For simplicity, this sample code generates a texture with only one color. In your actual application, load and use the appropriate image data.

Note: Input a string that can be displayed in a width of 17 double-byte characters in the `boxName` parameter for `CreateMessageBox`. Also, because line returns may be shifted on the CTR display, do not use them.

8.2.2 Changing Icons

After you create a StreetPass box, you can change its icon at any time. Pass the texture data for the icon you want to change to the `nn::cec::MessageBox::SetMessageBoxIcon` function.

© 2012–2014 Nintendo

CONFIDENTIAL

9 How to Create Icons for StreetPass Messages

StreetPass messages use normal texture data for their icons. Set these icons when you create StreetPass messages.

9.1 Creating Icons

Prepare a 40×40-pixel texture in the (little-endian) RGB565 native PICA format to use as an icon. To create texture data, output NW4C TGA files in the format specified by NW4C for Banner's Adobe Photoshop plug-in and then remove the header and padding region by specifying the `-dsl` option to `ctr_TexturePackager`.

Note: For information about the native PICA formats, see the *CTR Programming Manual: Basic Graphics*.

Configure the design of the icons however you like according to the content of the messages. Icons cannot have user-generated content (UGC) unless the UGC does not have to be supported by the local blacklist.

A CTR system receives StreetPass data along with its icon and then shows the icon in the Notifications List. The Notifications List does not support the local blacklist as instructed by the *CTR Guidelines: UGC*. If icons for StreetPass data were to use images that are classified as UGC, users could see UGC images sent by other users whom they found offensive in the past.

For more information about UGC—and the UGC that must be supported by the local blacklist—see the separately distributed *CTR Guidelines: UGC*.

9.2 Implementing Icons

Create a new message with the `nn::cec::CTR::Message::NewMessage` function and then set the icon data with the `nn::cec::CTR::Message::SetIcon` or `nn::cec::CTR::Message::SetExHeader` function.

Code 9-1 Sample Implementation of StreetPass Messages

```
// Create a message
nn::cec::Message cecMessage;
cecMessage.NewMessage( cecTitleId, groupId, messFlag,
                       sendMode, sendCount, propCount );

// Set the message body
char messageBody[] = "Hello!";
cecMessage.SetMessageBody(messageBody, sizeof(messageBody));

// Set the icon
u16 iconData[40*40];
memset(iconData, 0xf0f0, sizeof(iconData)); // Create a simple texture with
                                            // only one color
cecMessage.SetIcon(iconData, sizeof(iconData));
```

```
// Set the message title
char messageTitle[] = "Message received.";
cecMessage.SetInfoText(messageTitle, sizeof(messageTitle));

// Save the message to the outbox
result = cecMessageBox.WriteMessage(cecMessage, nn::cec::CEC_BOXTYPE_OUTBOX,
retMessId);
```

For simplicity, this sample code generates a texture with only one color. In your actual application, load and use appropriate image data.

For more information, see the *CTR Programming Manual: Wireless Communication*.

© 2012–2014 Nintendo

CONFIDENTIAL

10 Notes and Precautions

10.1 Bug Where Parts of an Icon Are Displayed Incorrectly

As shown in Figure 10-1, some built-in system applications do not display all icons properly.

Figure 10-1 Close-Up of an Icon That Is Partially Corrupted

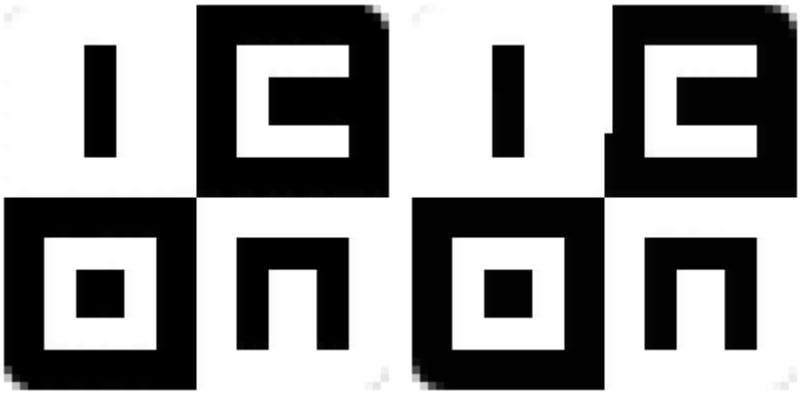

The icon on the left is rendered correctly and the icon on the right is partially corrupted. An area at the top of the icon, in the middle, is white even though it should be black.

This icon corruption is a symptom of a bug in the built-in system applications. As shown in Figure 10-2, part of area A in the 48×48-pixel icon is copied to area B.

Figure 10-2 Underlying Cause of the Symptom

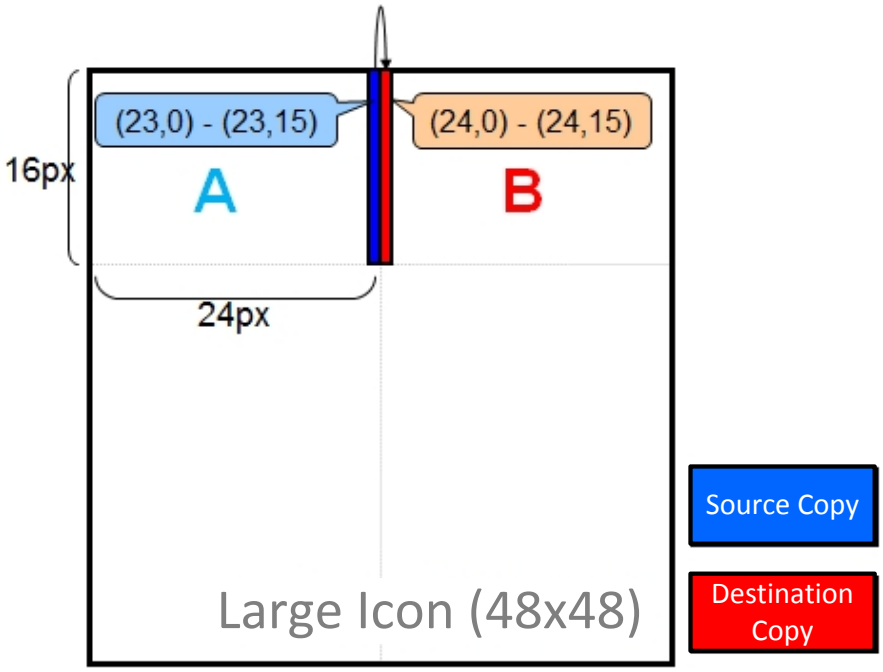

To prevent this symptom from affecting your icons, design them so that the area that is copied (as shown above) is the same or similar to the area that it is copied to.

Table 10-1 shows which built-in system applications are affected by this bug and when they are affected. It also shows when the fixes for this bug are scheduled to occur. Built-in applications for the Chinese, Korean, Taiwanese, and Hong Kong regions are not affected by this bug.

Table 10-1 Applications Affected by This Bug and Scheduled Fixes

Affected Applications	Timing	Affected Icons	Scheduled Fixes and Workarounds
System Settings	When the icons of downloadable applications are displayed on the Software Management screen	CTR icons	Icon corruption for this application has been fixed in CTR-SDK 3.2.4. If you are using an older development environment, Nintendo recommends that you check your icons in the development version of System Settings because this symptom may occur on Nintendo 3DS systems in the marketplace.
	When icons for expanded save data are displayed in the Extra Data Management screen	Expanded save data icons	
	When icons for StreetPass boxes are displayed in the StreetPass Management screen	Icons for StreetPass boxes	

© 2012–2014 Nintendo

CONFIDENTIAL

Affected Applications	Timing	Affected Icons	Scheduled Fixes and Workarounds
StreetPass Mii Plaza	When icons are displayed for Favorite Titles	CTR icons	Icon corruption for these applications has been fixed in a second network update. The fix is only applied through a network update, and may not necessarily apply to all Nintendo 3DS systems in the marketplace. Nintendo recommends that you check icons in the development version of Activity Log.
Activity Log	When icons are displayed in the Software Library and elsewhere (excluding Page View)	CTR icons	
Download Play	When downloadable software is selected from a client device and an icon is displayed	Icons for Download Play child programs	Icon corruption in this application has been fixed in a third network update. However, because an icon for a client device program is also being displayed with the unmodified Download Play version, Nintendo recommends that you check the display on the Download Play development version.

10.2 Bug in Menus Displayed for Demos on Networked Interactive Retail Displays

If there is no texture data for a particular language, a networked interactive retail display searches for and uses texture data for another language when it shows banners in its menu. Even if you only wanted to use a special texture for a particular language and a common texture by default, your special texture ends up being used for all languages.

As a result, if you want to change the texture from one language to the next, you must set a texture for every language.

Both menus in networked interactive retail displays and the tool that checks those menus—which is provided by the package for creating demos for networked interactive retail displays—have this bug. Nintendo does not plan to fix it. Please work around it by following these steps.

10.3 Bug That Causes the Home Menu to Freeze When Replacing Texture Data in the CTR Contextual Banner

When texture data that references from multiple materials is replaced in the contextual banner, an internal memory leak occurs when the banner is displayed in the HOME Menu.

For this reason, when another application on the HOME Menu is selected, and after another banner is initially displayed, the HOME Menu freezes after operations such as display of a banner with replaced texture data are repeatedly performed.

This bug existed in the HOME Menu, but was fixed with 3.2NUP. However, try to avoid this bug when distributing contextual banners to systems before 3.2NUP.

Note that when replacing texture data, you can check that this bug does not occur when repeatedly displaying the contextual banner in the HOME Menu multiple times. The following is the replacement texture size and recommended number of debugging tries.

- 80 times when the texture size is 32 KB
- 40 times when the texture size is 64 KB
- 20 times when the texture size is 128 KB
- 10 times when the texture size is 256 KB

© 2012–2014 Nintendo

CONFIDENTIAL

Revision History

Version	Revision Date	Category	Description
1.4	2013/10/21	Changed	4.1 Create Banner Model Data Corrected the fog object restrictions in the `.cenv` item in Table 4-3. 8.2.1 Creating a StreetPass Box Added a note.
1.3	2012/06/27	Changed	Updated the description in Section 10.3 Bug That Causes the Home Menu to Freeze When Replacing Texture Data in the CTR Contextual Banner.
1.2	2012/04/27	Changed	Added an explanation of the CTR icon information used in the notification applet in table 2.1 of Section 2.1.1. Updated information for Bug where Parts of an Icon Are Displayed Incorrectly in table 10, Section 10.1.
		Added	Added an explanation in Section 10.3 Bug That Causes the Home Menu to Freeze When Replacing Texture Data in the CTR Contextual Banner.
1.1	2012/02/24	Changed	Revised some expressions and terminology.
		Added	In Section 10.1 Parts of an Icon Are Displayed Incorrectly, noted that this bug does not occur in the China, Korea, and Taiwan regions.
1.0	2012/01/17	—	Initial version.

All company and product names in this document are the trademarks or registered trademarks of their respective companies.

© 2012–2014 Nintendo

The contents of this document cannot be duplicated, copied, reprinted, transferred, distributed, or loaned in whole or in part without the prior approval of Nintendo.