US 20200325073A1

(19) United States
(12) Patent Application Publication
Sun et al.
(10) Pub. No.: US 2020/0325073 A1
(43) Pub. Date: Oct. 15, 2020

(54) **SLURRY PLASMA SPRAY OF PLASMA RESISTANT CERAMIC COATING**

(71) Applicant: **Applied Materials, Inc.**, Santa Clara, CA (US)

(72) Inventors: **Jennifer Sun**, Mountain View, CA (US); **Biraja Prasad Kanungo**, San Francisco, CA (US); **Yikai Chen**, Santa Clara, CA (US); **Vahid Firouzdor**, San Mateo, CA (US)

(21) Appl. No.: **16/912,428**

(22) Filed: **Jun. 25, 2020**

Related U.S. Application Data

(63) Continuation of application No. 14/704,742, filed on May 5, 2015, now Pat. No. 10,730,798.

(60) Provisional application No. 61/989,903, filed on May 7, 2014.

Publication Classification

(51) **Int. Cl.**

C04B 35/10	(2006.01)
C04B 35/515	(2006.01)
C23C 4/04	(2006.01)
C23C 4/02	(2006.01)
C23C 4/18	(2006.01)
C23C 24/10	(2006.01)
C23C 28/04	(2006.01)
C23C 4/11	(2006.01)
C04B 35/488	(2006.01)
C04B 35/505	(2006.01)
C04B 35/44	(2006.01)
C04B 35/50	(2006.01)
C04B 35/486	(2006.01)
C04B 35/16	(2006.01)

(52) **U.S. Cl.**

CPC ***C04B 35/10*** (2013.01); *C04B 2235/3244* (2013.01); ***C23C 4/04*** (2013.01); ***C23C 4/02*** (2013.01); ***C23C 4/18*** (2013.01); ***C23C 24/103*** (2013.01); ***C23C 28/042*** (2013.01); ***C23C 4/11*** (2016.01); ***C04B 35/4885*** (2013.01); ***C04B 35/505*** (2013.01); ***C04B 35/44*** (2013.01); ***C04B 35/50*** (2013.01); ***C04B 35/486*** (2013.01); ***C04B 35/16*** (2013.01); *Y10T 428/24372* (2015.01); *C04B 2235/3418* (2013.01); *C04B 2235/3217* (2013.01); *C04B 2235/3224* (2013.01); *C04B 2235/3225* (2013.01); ***C04B 35/5156*** (2013.01)

(57) **ABSTRACT**

Disclosed herein are methods for producing an ultra-dense and ultra-smooth ceramic coating. A method includes feeding a slurry of ceramic particles into a plasma sprayer. The plasma sprayer generates a stream of particles directed toward the substrate, forming a ceramic coating on the substrate upon contact.

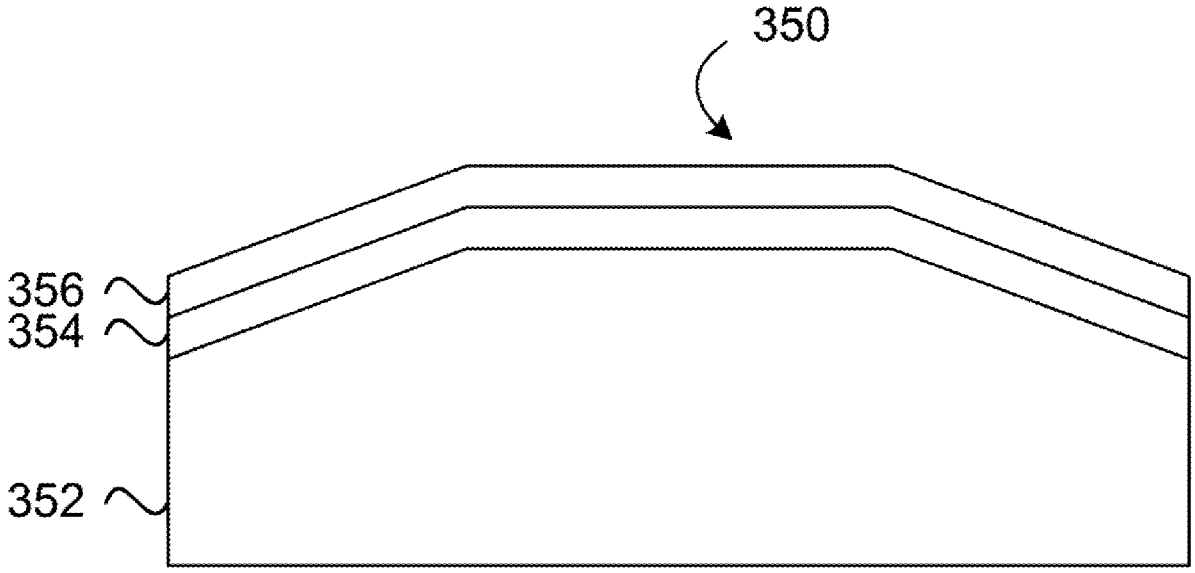

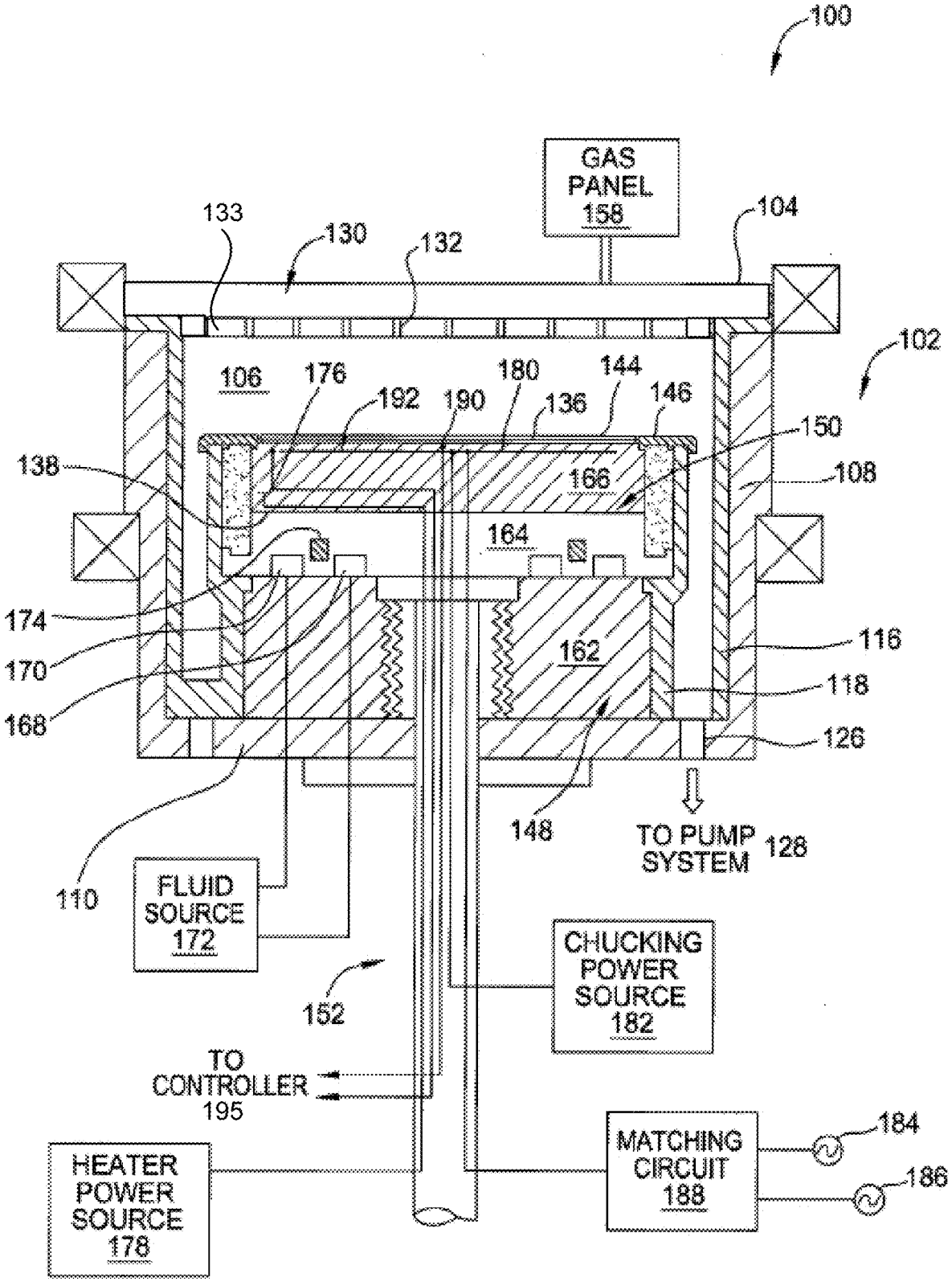
100
GAS PANEL 158
104
133
130
132
102
106
176
192
190
180
136
144
146
150
138
166
108
164
174
170
168
162
116
118
126
148
TO PUMP SYSTEM 128
110
FLUID SOURCE 172
CHUCKING POWER SOURCE 182
152
TO CONTROLLER 195
HEATER POWER SOURCE 178
MATCHING CIRCUIT 188
184
186

FIG. 1

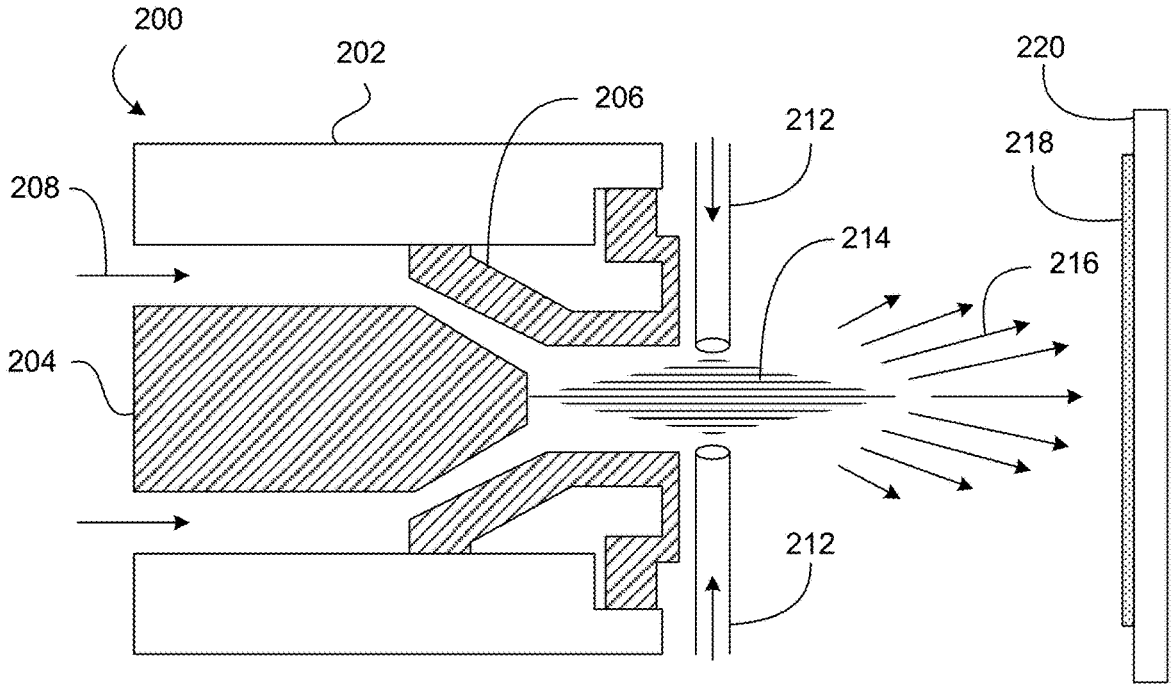

FIG. 2

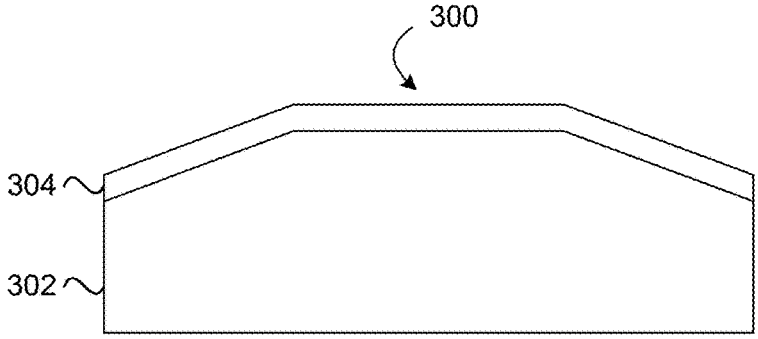

FIG. 3A

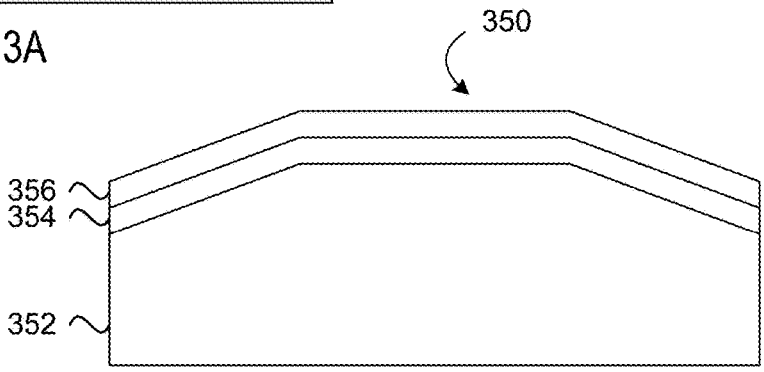

FIG. 3B

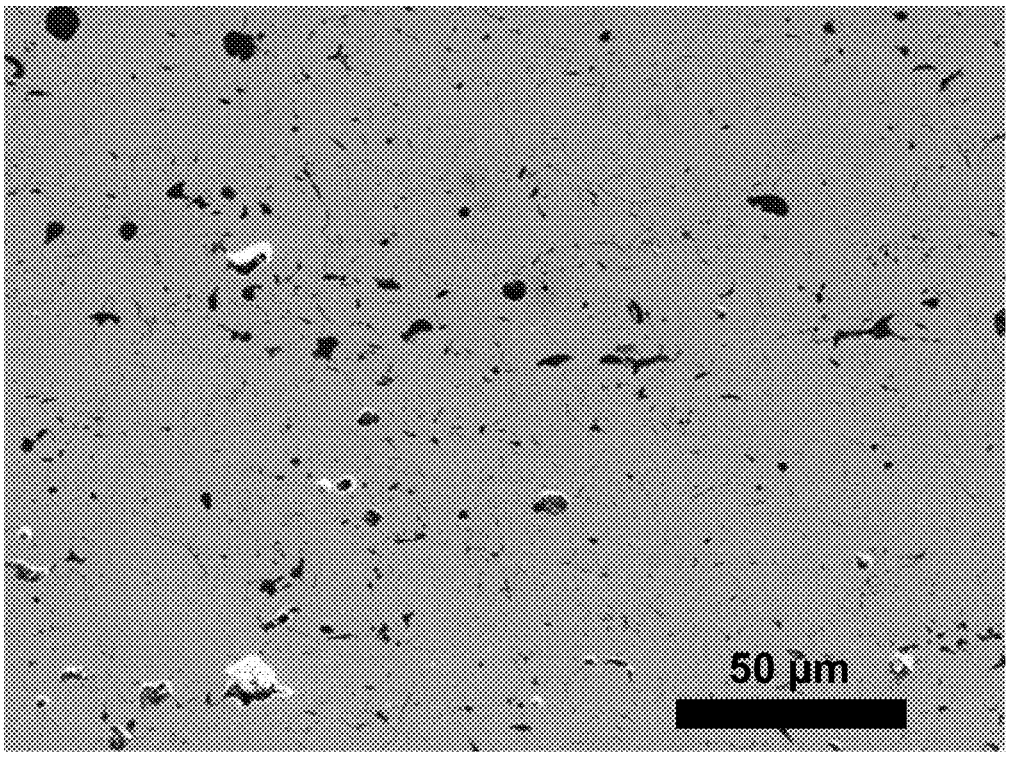

FIG. 4A

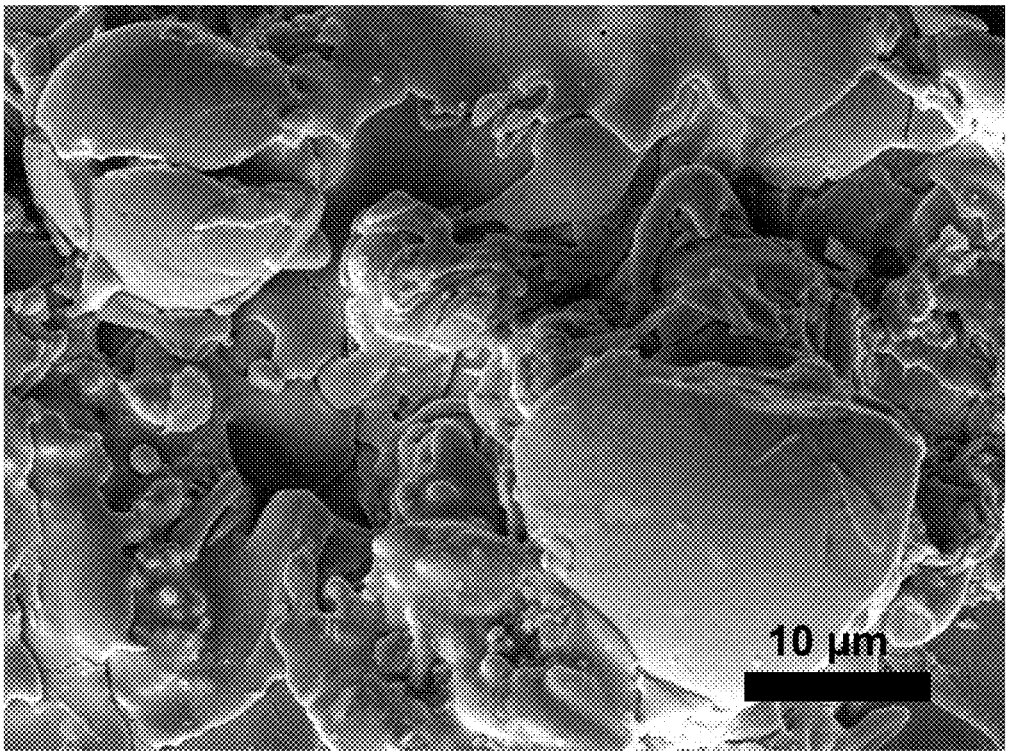

FIG. 4B

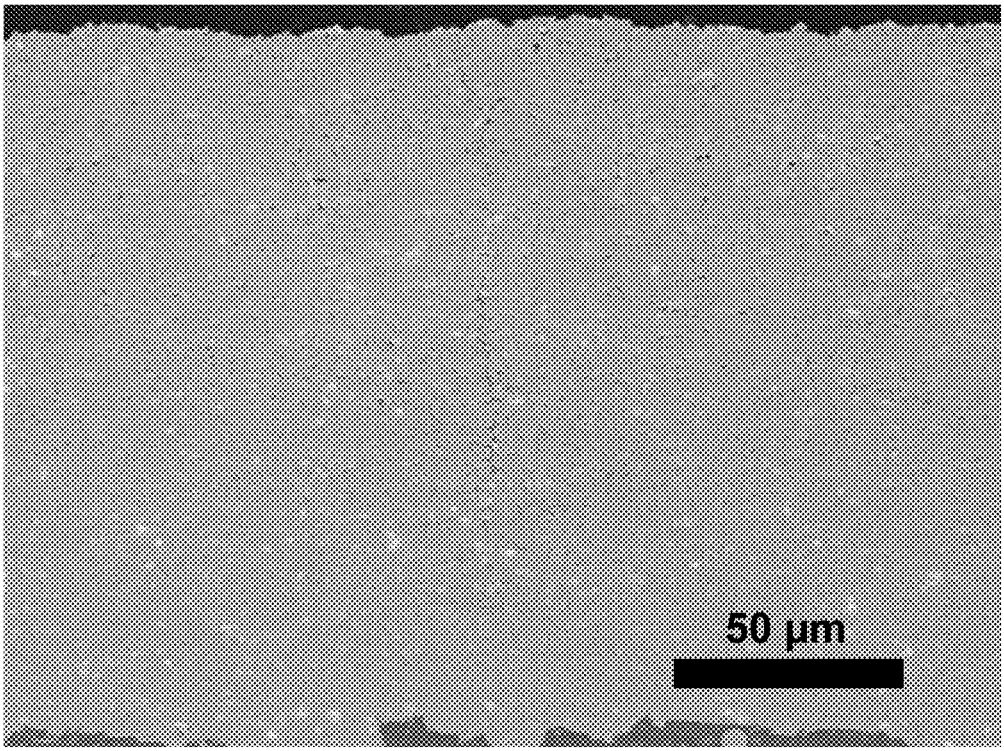

FIG. 5A

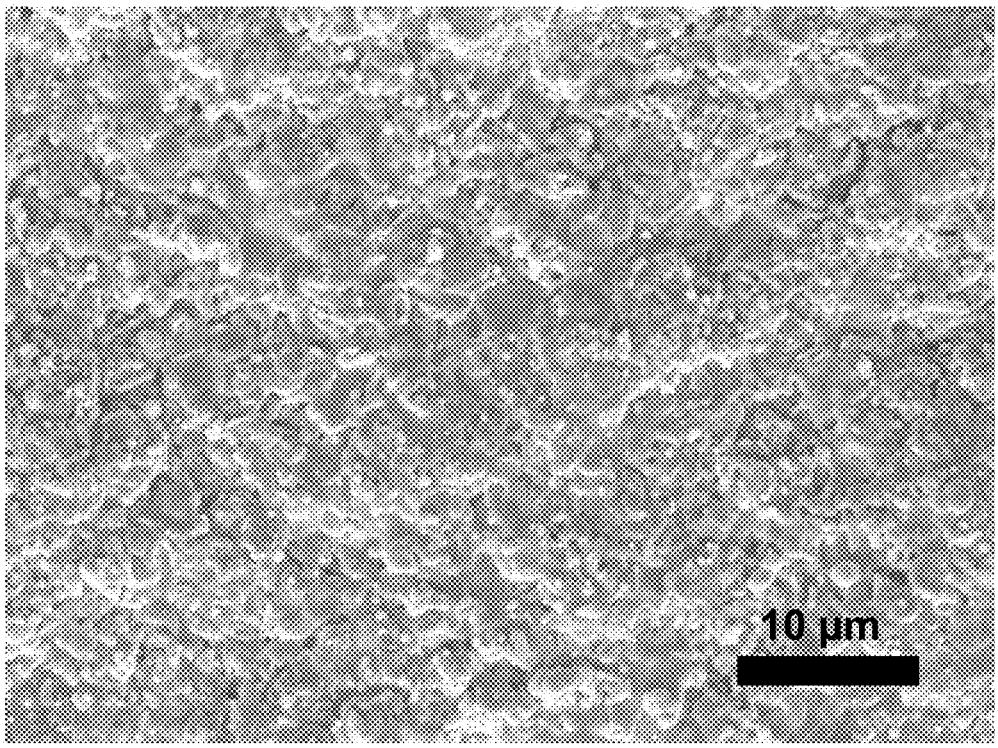

FIG. 5B

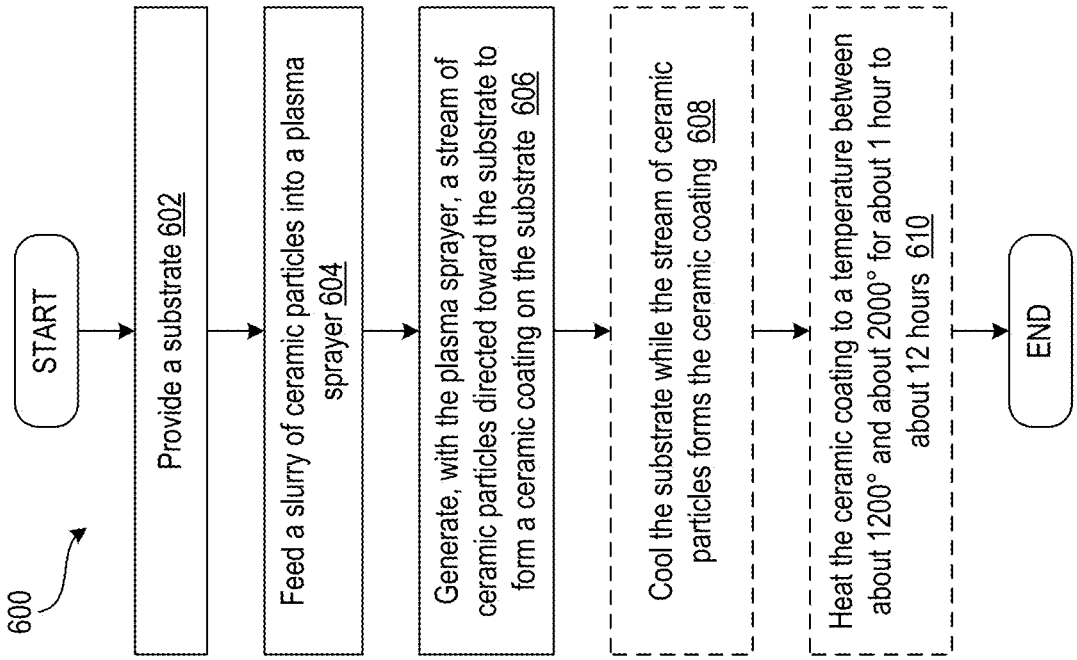
600
START
Provide a substrate 602
Feed a slurry of ceramic particles into a plasma sprayer 604
Generate, with the plasma sprayer, a stream of ceramic particles directed toward the substrate to form a ceramic coating on the substrate 606
Cool the substrate while the stream of ceramic particles forms the ceramic coating 608
Heat the ceramic coating to a temperature between about 1200° and about 2000° for about 1 hour to about 12 hours 610
END

FIG. 6

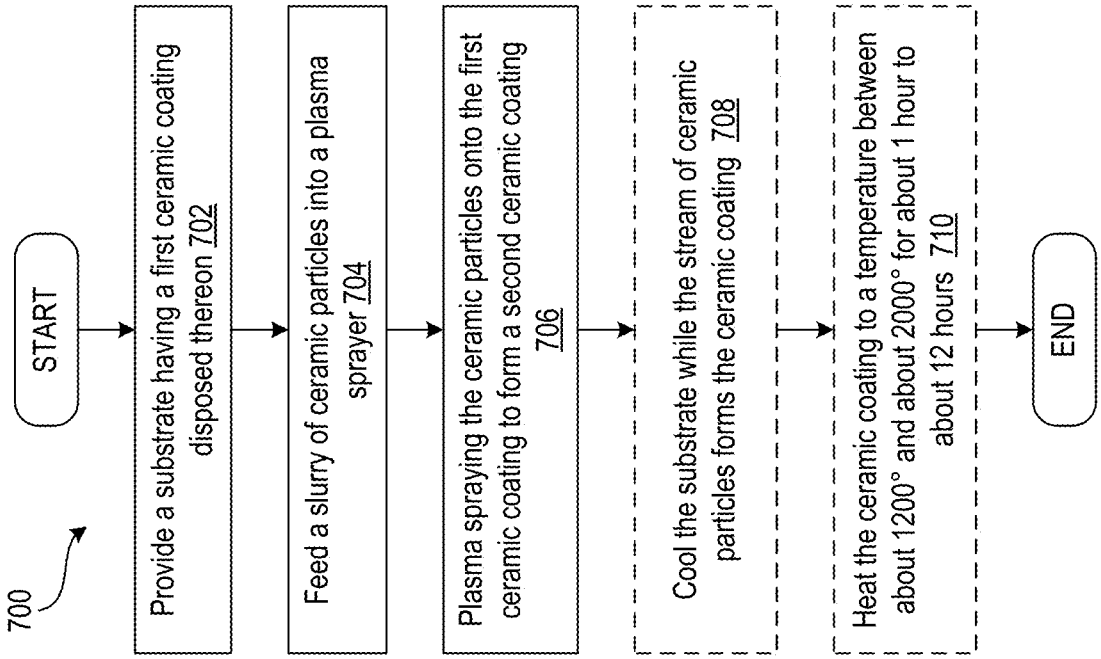
700
START
Provide a substrate having a first ceramic coating disposed thereon 702
Feed a slurry of ceramic particles into a plasma sprayer 704
Plasma spraying the ceramic particles onto the first ceramic coating to form a second ceramic coating 706
Cool the substrate while the stream of ceramic particles forms the ceramic coating 708
Heat the ceramic coating to a temperature between about 1200° and about 2000° for about 1 hour to about 12 hours 710
END

FIG. 7

SLURRY PLASMA SPRAY OF PLASMA RESISTANT CERAMIC COATING

CROSS-REFERENCE TO RELATED APPLICATION

[0001] This application is a continuation of U.S. patent application Ser. No. 14/704,742, filed May 5, 2015, which claims the benefit of priority of U.S. Provisional Patent Application No. 61/989,903, filed May 7, 2014, the disclosures of which are hereby incorporated by reference herein in their entireties.

TECHNICAL FIELD

[0002] Embodiments of the present invention relate, in general, to coatings.

BACKGROUND

[0003] In the semiconductor industry, devices are fabricated by a number of manufacturing processes producing structures of ever-decreasing size. Some manufacturing processes such as plasma etch and plasma clean processes expose a substrate support (e.g., an edge of the substrate support during wafer processing and the full substrate support during chamber cleaning) to a high-speed stream of plasma to etch or clean the substrate. The plasma may be highly corrosive, and may corrode processing chambers and other surfaces that are exposed to the plasma.

[0004] Plasma spray coatings are utilized to protect chamber components from processing conditions, in order to enhance on-wafer defect performance as well as the lifetime of the component. Typical chamber component coatings, however, can have inherent porosity, cracks, and rough surface finishes, which detract from their performance.

SUMMARY

[0005] The following is a simplified summary of the disclosure in order to provide a basic understanding of some aspects of the disclosure. This summary is not an extensive overview of the disclosure. It is intended neither to identify key or critical elements of the disclosure, nor to delineate any scope of the particular implementations of the disclosure or any scope of the claims. Its sole purpose is to present some concepts of the disclosure in a simplified form as a prelude to the more detailed description that is presented later.

[0006] Certain embodiments of the present disclosure relate to the production of ultra-dense and ultra-smooth coatings with enhanced defect performance for semiconductor processing chambers. In one aspect, a method includes providing a substrate, feeding a slurry of ceramic particles into a plasma plume to generate a stream of particles directed toward the substrate. The stream of particles forms a ceramic coating on the substrate upon contact.

[0007] In another aspect, a method includes providing a substrate having a first ceramic coating, feeding a slurry of ceramic particles into a plasma plume to generate a stream of particles directed toward the substrate. The stream of particles forms a second ceramic coating on the first ceramic coating upon contact.

BRIEF DESCRIPTION OF THE DRAWINGS

[0008] The embodiments disclosed herein are illustrated by way of example, and not by way of limitation, in the figures of the accompanying drawings in which like references indicate similar elements. It should be noted that different references to "an" or "one" embodiment in this disclosure are not necessarily to the same embodiment, and such references mean at least one.

[0009] FIG. **1** depicts a sectional view of a processing chamber according to an embodiment;

[0010] FIG. **2** depicts a sectional view of a plasma spray device according to an embodiment;

[0011] FIGS. **3**A and **3**B depict a sectional view of an exemplary chamber component with one and two coatings, respectively, according to an embodiment;

[0012] FIG. **4**A is a micrograph of a plasma sprayed coating;

[0013] FIG. **4**B is another micrograph of a plasma sprayed coating;

[0014] FIG. **5**A is a micrograph of a slurry plasma sprayed coating according to an embodiment;

[0015] FIG. **5**B is another micrograph of a slurry plasma sprayed coating according to an embodiment;

[0016] FIG. **6** is a flow diagram illustrating a process for producing a coating in accordance with an embodiment; and

[0017] FIG. **7** is a flow diagram illustrating a process for producing a multilayered coating in accordance with an embodiment.

DETAILED DESCRIPTION OF EMBODIMENTS

[0018] Embodiments of the present invention provide a substrate, such as a chamber component for a semiconductor processing chamber. The ceramic coating may be formed on the substrate using slurry plasma spray deposition. The ceramic coating may serve as a protective coating. In some embodiments, a coating stack may be deposited on the substrate, in which the coating stack is composed of two or more slurry plasma sprayed ceramic coatings. In such embodiments, each ceramic coating may be between about 10 micrometers to about 500 micrometers in thickness. Each ceramic coating may have a composition of one or more of $Y_3Al_5O_{12}$ (YAG), $Y_4Al_2O_9$ (YAM), Er_2O_3, Gd_2O_3, $Gd_3Al_5O_{12}$ (GAG), YF_3, Nd_2O_3, $Er_4Al_2O_9$, $Er_3Al_5O_{12}$ (EAG), $ErAlO_3$, $Gd_4Al_2O_9$, $GdAlO_3$, $Nd_3Al_5O_{12}$, $Nd_4Al_2O_9$, $NdAlO_3$, or a ceramic compound composed of $Y_4Al_2O_9$ and a solid-solution of Y_2O_3—ZrO_2. The improved erosion resistance provided by one or more of the disclosed ceramic coatings may improve the service life of the chamber component, while reducing maintenance and manufacturing cost.

[0019] FIG. **1** is a sectional view of a semiconductor processing chamber **100** having one or more chamber components that are coated with a coating layer in accordance with embodiments of the present invention. The processing chamber **100** may be used for processes in which a corrosive plasma environment is provided. For example, the processing chamber **100** may be a chamber for a plasma etcher or plasma etch reactor, a plasma cleaner, and so forth. Examples of chamber components that may include a coating layer include a substrate support assembly **148**, an electrostatic chuck (ESC) **150**, a ring (e.g., a process kit ring or single ring), a chamber wall, a base, a gas distribution plate, a showerhead, a liner, a liner kit, a shield, a plasma

screen, a flow equalizer, a cooling base, a chamber viewport, a chamber lid, and so on. The coating layer, which is described in greater detail below, may include one or more $Y_3Al_5O_{12}$, $Y_4Al_2O_9$, Er_2O_3, Gd_2O_3, $Gd_3Al_5O_{12}$, La_2O_3, YAG, YF_3, Nd_2O_3, $Er_4Al_2O_9$, $Er_3Al_5O_{12}$, $ErAlO_3$, $Gd_4Al_2O_9$, $GdAlO_3$, $Nd_3Al_5O_{12}$, $Nd_4Al_2O_9$, $NdAlO_3$, or a ceramic compound composed of $Y_4Al_2O_9$ and a solid-solution of Y_2O_3—ZrO_2. As illustrated, the substrate support assembly **148** has a ceramic coating layer **136**, in accordance with one embodiment. However, it should be understood that any of the other chamber components, such as those listed above, may also include a coating layer.

[0020] In one embodiment, the processing chamber **100** includes a chamber body **102** and a showerhead **130** that enclose an interior volume **106**. Alternatively, the showerhead **130** may be replaced by a lid and a nozzle in some embodiments. The chamber body **102** may be fabricated from aluminum, stainless steel or other suitable material. The chamber body **102** generally includes sidewalls **108** and a bottom **110**. One or more of the showerhead **130** (or lid and/or nozzle), sidewalls **108** and/or bottom **110** may include a coating layer.

[0021] An outer liner **116** may be disposed adjacent the sidewalls **108** to protect the chamber body **102**. The outer liner **116** may be fabricated and/or coated with a coating layer. In one embodiment, the outer liner **116** is fabricated from aluminum oxide.

[0022] An exhaust port **126** may be defined in the chamber body **102**, and may couple the interior volume **106** to a pump system **128**. The pump system **128** may include one or more pumps and throttle valves utilized to evacuate and regulate the pressure of the interior volume **106** of the processing chamber **100**.

[0023] The showerhead **130** may be supported on the sidewall **108** of the chamber body **102**. The showerhead **130** (or lid) may be opened to allow access to the interior volume **106** of the processing chamber **100**, and may provide a seal for the processing chamber **100** while closed. A gas panel **158** may be coupled to the processing chamber **100** to provide process and/or cleaning gases to the interior volume **106** through the showerhead **130** or lid and nozzle. Showerhead **130** may be used for processing chambers used for dielectric etch (etching of dielectric materials). The showerhead **130** includes a gas distribution plate (GDP) **133** having multiple gas delivery holes **132** throughout the GDP **133**. The showerhead **130** may include the GDP **133** bonded to an aluminum base or an anodized aluminum base **104**. The GDP **133** may be made from Si or SiC, or may be a ceramic such as Y_2O_3, Al_2O_3, YAG, and so forth.

[0024] For processing chambers used for conductor etch (etching of conductive materials), a lid may be used rather than a showerhead. The lid may include a center nozzle that fits into a center hole of the lid. The lid may be a ceramic such as Al_2O_3, Y_2O_3, YAG, or a ceramic compound composed of $Y_4Al_2O_9$ and a solid-solution of Y_2O_3—ZrO_2. The nozzle may also be a ceramic, such as Y_2O_3, YAG, or the ceramic compound composed of $Y_4Al_2O_9$ and a solid-solution of Y_2O_3—ZrO_2. The lid, showerhead base **104**, GDP **133** and/or nozzle may be coated with a ceramic coating.

[0025] Examples of processing gases that may be used to process substrates in the processing chamber **100** include halogen-containing gases, such as C_2F_6, SF_6, SiC_4, HBr, NF_3, CF_4, CHF_3, CH_2F_3, F, NF_3, Cl_2, CCl_4, BCl_3 and SiF_4, among others, and other gases such as O_2, or N_2O. Examples of carrier gases include N_2, He, Ar, and other gases inert to process gases (e.g., non-reactive gases). The substrate support assembly **148** is disposed in the interior volume **106** of the processing chamber **100** below the showerhead **130** or lid. The substrate support assembly **148** holds the substrate **144** during processing. A ring **146** (e.g., a single ring) may cover a portion of the electrostatic chuck **150**, and may protect the covered portion from exposure to plasma during processing. The ring **146** may be silicon or quartz in one embodiment.

[0026] An inner liner **118** may be coated on the periphery of the substrate support assembly **148**. The inner liner **118** may be a halogen-containing gas resistant material such as those discussed with reference to the outer liner **116**. In one embodiment, the inner liner **118** may be fabricated from the same materials of the outer liner **116**. Additionally, the inner liner **118** may be coated with a ceramic coating.

[0027] In one embodiment, the substrate support assembly **148** includes a mounting plate **162** supporting a pedestal **152**, and an electrostatic chuck **150**. The electrostatic chuck **150** further includes a thermally conductive base **164** and an electrostatic puck **166** bonded to the thermally conductive base by a bond **138**, which may be a silicone bond in one embodiment. An upper surface of the electrostatic puck **166** is covered by the ceramic coating layer **136** in the illustrated embodiment. In one embodiment, the ceramic coating layer **136** is disposed on the upper surface of the electrostatic puck **166**. In another embodiment, the ceramic coating layer **136** is disposed on the entire exposed surface of the electrostatic chuck **150** including the outer and side periphery of the thermally conductive base **164** and the electrostatic puck **166**. The mounting plate **162** is coupled to the bottom **110** of the chamber body **102** and includes passages for routing utilities (e.g., fluids, power lines, sensor leads, etc.) to the thermally conductive base **164** and the electrostatic puck **166**.

[0028] The thermally conductive base **164** and/or electrostatic puck **166** may include one or more optional embedded heating elements **176**, embedded thermal isolators **174** and/or conduits **168**, **170** to control a lateral temperature profile of the support assembly **148**. The conduits **168**, **170** may be fluidly coupled to a fluid source **172** that circulates a temperature regulating fluid through the conduits **168**, **170**. The embedded isolator **174** may be disposed between the conduits **168**, **170** in one embodiment. The heater **176** is regulated by a heater power source **178**. The conduits **168**, **170** and heater **176** may be utilized to control the temperature of the thermally conductive base **164**, thereby heating and/or cooling the electrostatic puck **166** and a substrate (e.g., a wafer) **144** being processed. The temperature of the electrostatic puck **166** and the thermally conductive base **164** may be monitored using a plurality of temperature sensors **190**, **192**, which may be monitored using a controller **195**.

[0029] The electrostatic puck **166** may further include multiple gas passages such as grooves, mesas and other surface features, which may be formed in an upper surface of the puck **166** and/or the ceramic coating layer **136**. The gas passages may be fluidly coupled to a source of a heat transfer (or backside) gas such as helium via holes drilled in the puck **166**. In operation, the backside gas may be provided at controlled pressure into the gas passages to enhance the heat transfer between the electrostatic puck **166** and the

substrate **144**. The electrostatic puck **166** includes at least one clamping electrode **180** controlled by a chucking power source **182**. The electrode **180** (or other electrode disposed in the puck **166** or base **164**) may further be coupled to one or more RF power sources **184**, **186** through a matching circuit **188** for maintaining a plasma formed from process and/or other gases within the processing chamber **100**. The sources **184**, **186** are generally capable of producing an RF signal having a frequency from about 50 kHz to about 3 GHz, with a power output of up to about 10,000 Watts.

[0030] FIG. **2** depicts a sectional view of a plasma spray device **200** according to an embodiment. The plasma spray device **200** is a type of thermal spray system that is used to perform "slurry plasma spray" ("SPS") deposition of ceramic materials. Unlike standard plasma spray techniques, SPS deposition utilizes a solution-based distribution of particles (a slurry) to deposit a ceramic coating on a substrate. The SPS may be performed by spraying the slurry using atmospheric plasma spray, high velocity oxy-fuel (HVOF), warm spraying, vacuum plasma spraying (VPS), and low pressure plasma spraying (LPPS).

[0031] The plasma spray device **200** may include a casing **202** that encases a nozzle anode **206** and a cathode **204**. The casing **202** permits gas flow **208** through the plasma spray device **200** and between the nozzle anode **206** and the cathode **204**. An external power source may be used to apply a voltage potential between the nozzle anode **206** and the cathode **204**. The voltage potential produces an arc between the nozzle anode **206** and the cathode **204** that ignites the gas flow **208** to produce a plasma gas. The ignited plasma gas flow **208** produces a high-velocity plasma plume **214** that is directed out of the nozzle anode **206** and toward a substrate **220**. A distance between a distal end of the nozzle anode **206** and the substrate **220** (i.e., a gun distance) may be between about 50 mm and about 500 mm.

[0032] The plasma spray device **200** may be located in a chamber or atmospheric booth. In some embodiments, the gas flow **208** may be a gas or gas mixture including, but not limited to argon, nitrogen, hydrogen, helium, and combinations thereof. A flow rate of the gas flow **208** may be between about 50 L/min and 400 L/min. A voltage potential applied between the nozzle anode **206** and the cathode **204** may be an AC waveform, a DC waveform, or a combination thereof, and may be between about 40 V and about 500 V. The applied potential is generally capable of providing a gun power of 30 kW or greater with a gun current of up to 1000 A or greater.

[0033] The plasma spray device **200** may be equipped with one or more fluid lines **212** to deliver a slurry into the plasma plume **214**, for example, at a flow rate between 5 mL/min and about 100 mL/min. In some embodiments, several fluid lines **212** may be arranged on one side or symmetrically around the plasma plume **214**. In some embodiments, the fluid lines **212** may be arranged in a perpendicular fashion to the plasma plume **214** direction, as depicted in FIG. **2**. In other embodiments, the fluid lines **212** may be adjusted to deliver the slurry into the plasma plume at a different angle (e.g., 45°), or may be located at least partially inside of the casing **202** to internally inject the slurry into the plasma plume **214**. In some embodiments, each fluid line **212** may provide a different slurry, which may be utilized to vary a composition of a resulting coating across the substrate **220**.

[0034] A slurry feeder system may be utilized to deliver the slurry to the fluid lines **212**. In some embodiments, the slurry feeder system includes a flow controller that maintains a constant flow rate during coating. The fluid lines **212** may be cleaned before and after the coating process using, for example, de-ionized water. In some embodiments, a slurry container, which contains the slurry fed to the plasma spray device **200**, is mechanically agitated during the course of the coating process keep the slurry uniform and prevent settling.

[0035] In some embodiments, the slurry is a slurry of ceramic particles within a solvent. The solvent may include a low molecular weight polar solvent, including, but not limited to, ethanol, methanol, acetonitrile, de-ionized water, or combinations thereof. In some embodiments, a pH of the slurry may be between about 5 and 12 to promote stability of the slurry. In some embodiments, a particle concentration in the slurry of about 10 wt % to about 50 wt % may be utilized to maintain low viscosity while maximizing flowability. In some embodiments, a mass-median-diameter (D50) of the particles in the slurry, which is the average particle diameter by mass, may be between about 10 nanometers and 10 micrometers. In some embodiments, the slurry may include a dispersant to help uniformly distribute the particles. Exemplary dispersants may include low molecular weight polymers, such as polyacrylic acid, ammonium polymethacrylate, omega-3 fatty acids (e.g., eicosapentaenoic acid and docosahexaenoic acid), and polyethylene glycol. In some embodiments, the particles may have compositions that include one or more of Er_2O_3, Gd_2O_3, $Gd_3Al_5O_{12}$, La_2O_3, YAG, YF_3, Nd_2O_3, $Er_4Al_2O_9$, $Er_3Al_5O_{12}$, $ErAlO_3$, $Gd_4Al_2O_9$, $GdAlO_3$, $Nd_3Al_5O_{12}$, $Nd_4Al_2O_9$, or $NdAlO_3$.

[0036] The plasma plume **214** can reach temperatures between about 3000° C. to about 10000° C. The intense temperature experienced by the slurry (or slurries) when injected into the plasma plume **214** may cause the slurry solvent to evaporate quickly and may melt the ceramic particles, generating a particle stream **216** that is propelled toward the substrate **220**. Upon impact with the substrate **220**, the molten particles may flatten and rapidly solidify on the substrate, forming a ceramic coating **218**. The solvent may be completely evaporated prior to the ceramic particles reaching the substrate **220**.

[0037] The parameters that can affect the thickness, density, and roughness of the ceramic coating include the slurry conditions, the particle size distribution, the slurry feed rate, the plasma gas composition, the gas flow rate, the energy input, the spray distance, and substrate cooling.

[0038] FIGS. **3**A and **3**B depict a sectional view of an exemplary chamber component with one and two coatings, respectively, according to an embodiment. Referring to FIG. **3**A, at least a portion of a base or body **302** of an article **300** is coated by a ceramic coating **304**. The article **300** (also referred to generally as a "substrate", which may be the same as the substrate **220** described with respect to FIG. **2**) may be a chamber component, such as a substrate support assembly, an electrostatic chuck (ESC), a ring (e.g., a process kit ring or single ring), a chamber liner, a showerhead base, a gas distribution plate, a liner, a liner kit, a shield, a plasma screen, a flow equalizer, a cooling base, a chamber viewport, a chamber lid, and so on. The body **302** of the article **300** may be a metal, a ceramic, a metal-ceramic composite, a polymer, or a polymer-ceramic composite.

[0039] Various chamber components are composed of different materials. For example, an electrostatic chuck may be composed of a ceramic such as Al_2O_3 (alumina), AlN (aluminum nitride), TiO (titanium oxide), TiN (titanium nitride) or SiC (silicon carbide) bonded to an anodized aluminum base. Al_2O_3, AlN and anodized aluminum have poor plasma erosion resistance. When exposed to a plasma environment with a fluorine chemistry and/or reducing chemistry, an electrostatic puck of an electrostatic chuck may exhibit degraded wafer chucking, increased helium leakage rate, wafer front-side and back-side particle production and on-wafer metal contamination after about 50 radio frequency hours (RFHrs) of processing. A radio frequency hour is an hour of processing.

[0040] A lid for a plasma etcher used for conductor etch processes may be a sintered ceramic such as Al_2O_3 since Al_2O_3 has a high flexural strength and high thermal conductivity. However, Al_2O_3 exposed to fluorine chemistries forms AlF particles as well as aluminum metal contamination on wafers. Some chamber lids have a thick film protective layer on a plasma facing side to minimize particle generation and metal contamination and to prolong the life of the lid. However, most thick film coating techniques inherent cracks and pores that might degrade on-wafer defect performance.

[0041] A process kit ring and a single ring may be used to seal and/or protect other chamber components, and are typically manufactured from quartz or silicon. These rings may be disposed around a supported substrate (e.g., a wafer) to ensure a uniform plasma density (and thus uniform etching). However, quartz and silicon have very high erosion rates under various etch chemistries (e.g., plasma etch chemistries). Additionally, such rings may cause particle contamination when exposed to plasma chemistries. The process kit ring and single ring may also consist of sintered ceramics such as YAG and or a ceramic compound composed of $Y_4Al_2O_9$ and a solid-solution of Y_2O_3—ZrO_2.

[0042] The showerhead for an etcher used to perform dielectric etch processes is typically made of anodized aluminum bonded to a SiC faceplate. When such a showerhead is exposed to plasma chemistries including fluorine, AlF may form due to plasma interaction with the anodized aluminum base. Additionally, a high erosion rate of the anodized aluminum base may lead to arcing and ultimately reduce a mean time between cleaning for the showerhead.

[0043] A chamber viewport (also known as an endpoint window) is a transparent component typically made of quartz or sapphire. Various optical sensors may be protected by the viewport, and may make optical sensor readings through the viewport. Additionally, a viewport may enable a user to visually inspect or view wafers during processing. Both quartz and sapphire have poor plasma erosion resistance. As the plasma chemistry erodes and roughens the viewport, the optical properties of the viewport change. For example, the viewport may become cloudy and/or an optical signal passing through the viewport may become skewed. This may impair an ability of the optical sensors to collect accurate readings. However, thick film protective layers may be inappropriate for use on the viewport because these coatings may occlude the viewport.

[0044] The examples provided above set forth just a few chamber components whose performance may be improved by use of a thin film protective layer as set forth in embodiments herein.

[0045] Referring back to FIG. **3**A, a body **302** of the article **300** may include one or more surface features. For an electrostatic chuck, surface features may include mesas, sealing bands, gas channels, helium holes, and so forth. For a showerhead, surface features may include a bond line, hundreds or thousands of holes for gas distribution, divots or bumps around gas distribution holes, and so forth. Other chamber components may have other surface features.

[0046] The ceramic coating **304** formed on the body **302** may conform to the surface features of the body **302**. As shown, the ceramic coating **304** maintains a relative shape of the upper surface of the body **302** (e.g., telegraphing the shapes of the mesa). Additionally, the ceramic coating may be thin enough so as not to plug holes in the showerhead or helium holes in the electrostatic chuck. In one embodiment, the ceramic coating **304** has a thickness of below about 20 micrometers. In a further embodiment, the ceramic coating **304** has a thickness of between about 10 micrometers to about 500 micrometers. The ceramic coating **304** may be deposited on the body **302** using the plasma spray device **200** described with respect to FIG. **2**.

[0047] Referring to FIG. **3**B, at least a portion of a base or body **352** of an article **350** is coated with two coatings: a first coating **354** and a second coating **356** deposited on the first coating **354**. In some embodiments, the first coating **354** may be a coating performed using a standard deposition technique, such as dry plasma spraying of a powder, thermal deposition, sputtering, etc. The first coating **354** may be a ceramic coating, but may have high surface roughness as well as surface defects such as cracks and pores. Accordingly, the second coating **356** may be deposited onto the first coating **354**. The second coating may be an SPS deposited ceramic coating using, for example, the plasma spray device **200** described with respect to FIG. **2**. In some embodiments, the first and second coating may both be SPS deposited ceramic coatings with different compositions.

[0048] The first and second coatings **354**, **356** are merely illustrative, and any suitable number of coatings may be deposited on the body **352**, forming a coating stack. One or more of the coatings in the coating stack may be a ceramic coating (e.g., an SPS-deposited ceramic coating). The coatings in the coating stack may all have the same thickness, or they may have varying thicknesses. Each of the coatings in the coating stack may have a thickness of less than about 20 micrometers, and about 10 micrometers in some embodiments. In one example, for the two-layer stacking, as depicted in FIG. **3**B, the first coating **354** may have a thickness of about 10 micrometers, and the second coating **356** may have a thickness of about 10 micrometers. In another example, first coating **356** may be a YAG layer having a thickness of about 10 micrometers, and the second coating **356** may be an SPS-deposited ceramic coating having a thickness of about 500 micrometers.

[0049] Each time the article is heated and cooled, the mismatch in coefficients of thermal expansion between a ceramic coating and the substrate that it coats cause stress on ceramic coating. Such stress may be concentrated at the vertical cracks. This may cause the ceramic coating to eventually peel away from the substrate that it coats. In contrast, if there are not vertical cracks, then the stress is approximately evenly distributed across the thin film. Accordingly, in one embodiment the first coating **354** is an amorphous ceramic such as YAG or EAG, and the second coating **356** is a crystalline or nano-crystalline ceramic such

as the ceramic compound or Er_2O_3, in which one or more of the coatings are SPS-deposited coatings. In such an embodiment, the second coating **356** may provide greater plasma resistance as compared to the first coating **354**. By forming the second coating **356** over the first coating **354** rather than directly over the body **352**, the first coating **354** acts as a buffer to minimize lattice mismatch on the subsequent coating. Thus, a lifetime of the second coating **356** may be increased.

[0050] In another example, each of the body, $Y_3Al_5O_{12}$, $Y_4Al_2O_9$, Er_2O_3, Gd_2O_3, $Er_3Al_5O_{12}$, $Gd_3Al_5O_{12}$, and the ceramic compound composed of $Y_4Al_2O_9$ and a solid-solution of Y_2O_3—ZrO_2 may have a different coefficient of thermal expansion. The greater the mismatch in the coefficient of thermal expansion between two adjacent materials, the greater the likelihood that one of those materials will eventually crack, peel away, or otherwise lose its bond to the other material. The first and second coatings **354**, **356** may be formed in such a way to minimize mismatch of the coefficient of thermal expansion between adjacent coatings (or between the first coating **354** and the body **352**). For example, the body **352** may be alumina, and EAG may have a coefficient of thermal expansion that is closest to that of alumina, followed by the coefficient of thermal expansion for YAG, followed by the coefficient of thermal expansion for an additional compound ceramic coating. Accordingly, first coating **354** may be EAG, the second coating **356** may be YAG, and an additional coating may be the compound ceramic in one embodiment.

[0051] In another example, the coatings in the coating stack may be alternating layers of two different ceramics. For example, a first and third coating may be YAG, and a second and fourth coating may be the compound ceramic. Such alternating coatings may provide advantages similar to those set forth above in cases where one material used in the alternating coatings is amorphous and the other material used in the alternating coatings is crystalline or nano-crystalline.

[0052] In some embodiments, one of more of the coatings in the coating stack are transition layers formed using a heat treatment. If the body **352** is a ceramic body, then a high temperature heat treatment may be performed to promote interdiffusion between a ceramic coating (e.g., ceramic coating **354**) and the body **352**. Additionally, the heat treatment may be performed to promote interdiffusion between adjacent coatings or between a thick coating and a thin coating. The transition layer may be a non-porous layer, may act as a diffusion bond between two ceramics, and may provide improved adhesion between the adjacent ceramic coatings. This may help prevent a ceramic coating from cracking, peeling off, or stripping off during plasma processing.

[0053] The thermal treatment may be a heat treatment at up to about 1200-2000° C. at a ramp rate of 0.5-5° C./minute for a duration of up to 1-12 hours. The cool down can be controlled at a rate of 0.5-5° C./minute or can be a natural cool down under ambient conditions. This is may create an inter-diffusion layer between a first ceramic coating and one or more of an adjacent ceramic body or a second ceramic coating. For example, if the ceramic body is Al_2O_3, and the ceramic coating is composed of a compound ceramic $Y_4Al_2O_9$ and a solid solution Y_2-xZr_xO_3 (Y_2O_3—ZrO_2 solid solution), then a $Y_3Al_5O_{12}$ interface layer will be formed. Similarly, a heat treatment will cause a transition layer of EAG to form between Er_2O_3 and Al_2O_3. A heat treatment will also cause a transition layer of YAG to form between Y_2O_3 and Al_2O_3. A heat treatment may also cause GAG to form between Gd_2O_3 and Al_2O_3. A heat treatment of yttria stabilized zirconia (YSZ) over Al_2O_3 can form a transition layer of the compound ceramic of $Y_4Al_2O_9$ and a solid solution Y_2-xZr_xO_3. Other transition layers may be formed between other adjacent ceramic coatings.

[0054] By performing SPS deposition using a slurry of ceramic particles, in accordance with the embodiments described herein, examples of ceramic coating compositions may include $Y_3Al_5O_{12}$, $Y_4Al_2O_9$, Er_2O_3, Gd_2O_3, La_2O_3, YAG, $Er_3Al_5O_{12}$, $Gd_3Al_5O_{12}$, a ceramic compound composed of $Y_4Al_2O_9$ and a solid-solution of Y_2O_3—ZrO_2 (Y_2O_3—ZrO_2 solid solution), or any of the other ceramic materials previously identified. Other Er based and/or Gd based plasma resistant rare earth oxides may also be used to form the ceramic coatings (e.g., coatings **218**, **304**, **354**, and/or **356**).

[0055] The SPS-deposited ceramic coatings may also be based on a solid solution formed by any of the aforementioned ceramics. With reference to the ceramic compound composed of $Y_4Al_2O_9$ and a solid-solution of Y_2O_3—ZrO_2, in one embodiment, the ceramic compound includes 62.93 molar ratio (mol %) Y_2O_3, 23.23 mol % ZrO_2 and 13.94 mol % Al_2O_3. In another embodiment, the ceramic compound can include Y_2O_3 in a range of 50-75 mol %, ZrO_2 in a range of 10-30 mol % and Al_2O_3 in a range of 10-30 mol %. In another embodiment, the ceramic compound can include Y_2O_3 in a range of 40-100 mol %, ZrO_2 in a range of 0-60 mol % and Al_2O_3 in a range of 0-10 mol %. In another embodiment, the ceramic compound can include Y_2O_3 in a range of 40-60 mol %, ZrO_2 in a range of 30-50 mol % and Al_2O_3 in a range of 10-20 mol %. In another embodiment, the ceramic compound can include Y_2O_3 in a range of 40-50 mol %, ZrO_2 in a range of 20-40 mol % and Al_2O_3 in a range of 20-40 mol %. In another embodiment, the ceramic compound can include Y_2O_3 in a range of 70-90 mol %, ZrO_2 in a range of 0-20 mol % and Al_2O_3 in a range of 10-20 mol %. In another embodiment, the ceramic compound can include Y_2O_3 in a range of 60-80 mol %, ZrO_2 in a range of 0-10 mol % and Al_2O_3 in a range of 20-40 mol %. In another embodiment, the ceramic compound can include Y_2O_3 in a range of 40-60 mol %, ZrO_2 in a range of 0-20 mol % and Al_2O_3 in a range of 30-40 mol %. In another embodiment, the ceramic compound can include Y_2O_3 in a range of 30-60 mol %, ZrO_2 in a range of 0-20 mol % and Al_2O_3 in a range of 30-60 mol %. In another embodiment, the ceramic compound can include Y_2O_3 in a range of 20-40 mol %, ZrO_2 in a range of 20-80 mol % and Al_2O_3 in a range of 0-60 mol %. In other embodiments, other distributions may also be used for the ceramic compound.

[0056] In one embodiment, an alternative ceramic compound that includes a combination of Y_2O_3, ZrO_2, Er_2O_3, Gd_2O_3 and SiO_2 is used for the ceramic coating. In one embodiment, the alternative ceramic compound can include Y_2O_3 in a range of 40-45 mol %, ZrO_2 in a range of 0-10 mol %, Er_2O_3 in a range of 35-40 mol %, Gd_2O_3 in a range of 5-10 mol % and SiO2 in a range of 5-15 mol %. In another embodiment, the alternative ceramic compound can include Y_2O_3 in a range of 30-60 mol %, ZrO_2 in a range of 0-20 mol %, Er_2O_3 in a range of 20-50 mol %, Gd_2O_3 in a range of 0-10 mol % and SiO2 in a range of 0-30 mol %. In another embodiment, the alternative ceramic compound can include

Y_2O_3 in a range of 30-45 mol %, ZrO_2 in a range of 5-15% mol %, Er_2O_3 in a range of 25-60 mol % and Gd_2O_3 in a range of 0-25 mol %. In a first example, the alternative ceramic compound includes 40 mol % Y_2O_3, 5 mol % ZrO_2, 35 mol % Er_2O_3, 5 mol % Gd_2O_3 and 15 mol % SiO_2. In a second example, the alternative ceramic compound includes 45 mol % Y_2O_3, 5 mol % ZrO_2, 35 mol % Er_2O_3, 10 mol % Gd_2O_3 and 5 mol % SiO_2. In a third example, the alternative ceramic compound includes 40 mol % Y_2O_3, 5 mol % ZrO_2, 40 mol % Er_2O_3, 7 mol % Gd_2O_3 and 8 mol % SiO_2. In one embodiment, the ceramic coating includes Y_2O_3 in a range of 70-75 mol % and ZrO_2 in a range of 25-30 mol %. In a further embodiment, the ceramic coating is a material entitled YZ20 that includes 73.13 mol % Y_2O_3 and 26.87 mol % ZrO_2. In a further embodiment, the ceramic coating is a material entitled YEZ08 that includes 37 mol % Y_2O_3, 8 mol % ZrO_2 and 55 mol % Er_2O_3. In a further embodiment, the ceramic coating is a material entitled YEZG10 that includes 40 mol % Y_2O_3, 10 mol % ZrO_2, 30 mol % Er_2O_3 and 20 mol % Gd_2O_3.

[0057] Any of the aforementioned ceramic coatings may include trace amounts of other materials such as ZrO_2, Al_2O_3, SiO_2, B_2O_3, Er_2O_3, Nd_2O_3, Nb_2O_5, CeO_2, Sm_2O_3, Yb_2O_3, or other oxides. In one embodiment, the same ceramic material is not used for two adjacent ceramic coatings. However, in another embodiment adjacent coatings may be composed of the same ceramic.

[0058] Reference is now made to FIGS. **4** and **5** to demonstrate the differences in preparing a ceramic coating using conventional plasma spray deposition with a dry powder and slurry plasma spray deposition of a slurry, respectively.

[0059] FIGS. **4**A and **4**B are micrographs of a plasma sprayed coating prepared by plasma spraying a dry powder of Y_2O_3 ("dry plasma spraying"), which show the same Y_2O_3 coating at different magnifications. FIGS. **5**A and **5**B are micrographs of a slurry plasma spray coating prepared by plasma spraying a Y_2O_3 slurry according to an embodiment, which show the same Y_2O_3 coating at different magnifications. Table 1 illustrates the improved properties of the SPS-deposited coating of FIGS. **5**A and **5**B over the dry plasma sprayed coating of FIGS. **4**A and **4**B, in terms of surface roughness, porosity, and corrosion resistance (e.g., HCl bubble time).

TABLE 1

Comparison of Dry Plasma Spraying Versus Slurry Plasma Spraying

Property	Dry Plasma Sprayed Y_2O_3	Slurry Plasma Sprayed Y_2O_3
Roughness (in μin)	up to 270	less than 100
Porosity (in %)	3-5	less than 0.8
HCl Bubble Time (in hours)	up to 4	at least 8

[0060] The dry plasma sprayed coating of FIGS. **4**A and **4**B is highly porous and contains defects that expose the underlying substrate, while the solution sprayed coating of FIGS. **5**A and **5**B is less porous and has minimal defects. In some embodiments, an SPS-deposited coating, such as that of FIGS. **5**A and **5**B, may be deposited on a substrate having a dry plasma sprayed coating, such as that of FIGS. **4**A and **4**B, to mask the defects and ultimately provide a smoother ceramic coating.

[0061] FIG. **6** is a flow diagram illustrating a process **600** for producing a coating in accordance with an embodiment. At block **602**, a substrate is provided. In some embodiments, the substrate is a wafer (e.g., a silicon wafer). In some embodiments, the substrate may be a suitable chamber component as described with respect to FIG. **1**. For example, the substrate could be any of, but not limited to, a lid, a nozzle, an electrostatic chuck (e.g., ESC **150**), a showerhead (e.g., showerhead **130**), a liner (e.g., outer liner **116** or inner liner **118**) or liner kit, or a ring (e.g., ring **146**).

[0062] At block **604**, a slurry of ceramic particles is fed into a plasma sprayer. The slurry may be fed into the plasma sprayer (e.g., the plasma spray device **200**) using a suitable fluid line (e.g., one or more of the fluid lines **212**). The slurry may contain ceramic particles with compositions of one or more of Er_2O_3, Gd_2O_3, $Gd_3Al_5O_{12}$, YF_3, Nd_2O_3, $Er_4Al_2O_9$, $Er_3Al_5O_{12}$, $ErAlO_3$, $Gd_4Al_2O_9$, $GdAlO_3$, $Nd_3Al_5O_{12}$, $Nd_4Al_2O_9$, or $NdAlO_3$. A D50 of the particles may be between about 10 nanometers and 10 micrometers. The slurry may contain a solvent, such as ethanol, methanol, de-ionized water, acetonitrile, or combinations thereof, and a pH of the slurry may be between 5 and 12. A particle concentration in the slurry may be about 10 wt % to about 50 wt %.

[0063] At block **606**, the plasma sprayer generates a stream of ceramic particles directed toward the substrate to form a ceramic coating on the substrate. As the slurry enters a plasma plume generated by the plasma sprayer (e.g., plasma plume **214**), the solvent is vaporized and a stream of particles (e.g., particle stream **216**) is propelled toward a substrate (e.g., substrate **220**). Molten ceramic particles that impinge on a surface of the substrate form a ceramic coating on the substrate. A composition of the resultant ceramic coating may be one or more of $Y_3Al_5O_{12}$, $Y_4Al_2O_9$, Er_2O_3, Gd_2O_3, $Gd_3Al_5O_{12}$ (GAG), YF_3, Nd_2O_3, $Er_4Al_2O_9$, $Er_3Al_5O_{12}$ (EAG), $ErAlO_3$, $Gd_4Al_2O_9$, $GdAlO_3$, $Nd_3Al_5O_{12}$, $Nd_4Al_2O_9$, $NdAlO_3$, or a ceramic compound composed of $Y_4Al_2O_9$ and a solid-solution of Y_2O_3—ZrO_2.

[0064] In some embodiments, a mask may have been placed over the substrate prior to performing SPS deposition. For example, a mask may be placed a short distance from the substrate (e.g., 1-10 mm) that selectively blocks ceramic particles from impinging on certain regions of the substrate. As another example, the mask may be a photoresist layer, which can be stripped later to leave behind features composed of ceramic material on the substrate. The masking may allow for macroscale and microscale ceramic features to be deposited on the substrate. For example, masking the substrate may be used to form mesas on ESC surfaces.

[0065] At block **608**, the substrate is cooled while the stream of ceramic particles forms the ceramic coating. For example, a cooling fluid line (e.g., a water line) may pass beneath or adjacent to the substrate in order to induce heat exchange between the substrate and the cooling fluid as the stream of hot particles impinge on the substrate. Cooling the substrate may facilitate the formation of a ceramic coating in some embodiments. In other embodiments, block **608** may be omitted entirely.

[0066] At block **610**, the ceramic coating is heated to a temperature between about 1200° C. and about 2000° C. for about 1 hour to about 12 hours. In some embodiments, block **610** is performed after the plasma spraying is completed. The substrate may be heated in the plasma sprayer chamber

(e.g., by heating with a thermal element located adjacent to the substrate) or in a separate heating chamber. Heating the ceramic coating may help to reduce the porosity and surface roughness of the ceramic coating. In some embodiments, block **610** may be omitted entirely.

[0067] FIG. **7** is a flow diagram illustrating a process **700** for producing a multilayered coating in accordance with an embodiment. At block **702**, a substrate having a first ceramic coating disposed thereon is provided. The first ceramic coating may be a slurry plasma sprayed ceramic coating, or may have been deposited using a different deposition technique. In some embodiments, the substrate may be a suitable chamber component as described with respect to FIG. **1**. For example, the substrate could be any of, but not limited to, a lid, a nozzle, an electrostatic chuck (e.g., ESC **150**), a showerhead (e.g., showerhead **130**), a liner (e.g., outer liner **116** or inner liner **118**) or liner kit, or a ring (e.g., ring **146**).

[0068] At block **704**, a slurry of ceramic particles is fed into a plasma sprayer. Block **704** may be the same or similar to block **604** described with respect to FIG. **6**.

[0069] At block **706**, the plasma sprayer generates a stream of ceramic particles directed toward the substrate to form a second ceramic coating on the first ceramic coating. Block **706** may be the same or similar to block **606** described with respect to FIG. **6**, and the slurry may be any suitable slurry described herein. In some embodiments, a first porosity of the first ceramic coating is greater than 0.5%, and a second porosity of the second ceramic coating is less than or equal to 0.5%. In some embodiments, a first surface roughness of the first ceramic coating is greater than or equal to 100 μin, and a second surface roughness of the second ceramic coating is less than or equal to 100 μin. In some embodiments, masking (as described with respect to block **606** in FIG. **6**) may be used to selectively pattern ceramic features on the first ceramic coating.

[0070] In some embodiments, the first and second ceramic coatings have the same compositions. In some embodiments, the first and second ceramic coatings have different compositions. In some embodiments, blocks **704** and **706** may be performed as many times as desired to produce a multilayered coating stack.

[0071] At block **708**, the substrate is cooled while the stream of ceramic particles forms the second ceramic coating. Block **708** may be performed in a substantially similar fashion as block **608**, as described with respect to FIG. **6**. In some embodiments, block **708** may be omitted entirely.

[0072] At block **710**, the ceramic coating is heated to a temperature between about 1200° C. and about 2000° C. for about 1 hour to about 12 hours. Block **710** may be performed in a substantially similar fashion as block **610**, as described with respect to FIG. **6**. In some embodiments, block **710** may be omitted entirely.

[0073] The preceding description sets forth numerous specific details such as examples of specific systems, components, methods, and so forth, in order to provide a good understanding of several embodiments of the present invention. It will be apparent to one skilled in the art, however, that at least some embodiments of the present invention may be practiced without these specific details. In other instances, well-known components or methods are not described in detail or are presented in simple block diagram format in order to avoid unnecessarily obscuring the present invention. Thus, the specific details set forth are merely exemplary. Particular embodiments may vary from these exemplary details and still be contemplated to be within the scope of the present disclosure.

[0074] Reference throughout this specification to "one embodiment" or "an embodiment" means that a particular feature, structure, or characteristic described in connection with the embodiment is included in at least one embodiment. Thus, the appearances of the phrase "in one embodiment" or "in an embodiment" in various places throughout this specification are not necessarily all referring to the same embodiment. In addition, the term "or" is intended to mean an inclusive "or" rather than an exclusive "or." When the term "about" or "approximately" is used herein, this is intended to mean that the nominal value presented is precise within ±10%.

[0075] Although the operations of the methods herein are shown and described in a particular order, the order of the operations of each method may be altered so that certain operations may be performed in an inverse order or so that certain operation may be performed, at least in part, concurrently with other operations. In another embodiment, instructions or sub-operations of distinct operations may be in an intermittent and/or alternating manner.

[0076] It is to be understood that the above description is intended to be illustrative, and not restrictive. Many other embodiments will be apparent to those of skill in the art upon reading and understanding the above description. The scope of the invention should, therefore, be determined with reference to the appended claims, along with the full scope of equivalents to which such claims are entitled.

What is claimed is:

1. A method of forming a plasma resistant ceramic coating on a component of a processing chamber, the method comprising:

feeding a slurry into a plasma sprayer, wherein the slurry comprises:

ceramic particles; and

a polymer dispersant to facilitate uniform distribution of the ceramic particles; and

generating, with the plasma sprayer, a stream of the ceramic particles directed toward the component, wherein the stream of the ceramic particles forms the plasma resistant ceramic coating on the component upon contact with the component, wherein a composition of the plasma resistant ceramic coating comprises 40 mol % to less than 100 mol % of Y_2O_3, greater than 0 mol % to 60 mol % of ZrO_2, and greater than 0 mol % to 10 mol % of Al_2O_3, and wherein the ceramic particles of the slurry comprise compositions that result in the composition of the plasma resistant ceramic coating upon contact with the component.

2. The method of claim **1**, wherein the polymer dispersant comprises at least one of polyacrylic acid, ammonium polymethacrylate, an omega-3 fatty acid, or polyethylene glycol.

3. The method of claim **1**, wherein the component comprises a ceramic, the method further comprising:

after forming the plasma resistant ceramic coating, heating the plasma resistant ceramic coating to a temperature of up to about 2000° C.;

heat treating the component and the plasma resistant ceramic coating at the temperature of up to about 2000° C. for a time duration up to about 12 hours; and

forming a transition layer between the plasma resistant ceramic coating and the component via the heat treating.

4. The method of claim **1**, wherein the component comprises an additional ceramic coating disposed thereon, wherein the plasma resistant ceramic coating is formed over the additional ceramic coating, and wherein the additional ceramic coating is configured to minimize lattice mismatch with the plasma resistant ceramic coating.

5. The method of claim **4**, wherein:

a first porosity of the additional ceramic coating is greater than 0.8%, and a second porosity of the plasma resistant ceramic coating is less than or equal to 0.8%; and

a first surface roughness of the additional ceramic coating is greater than 100 μin, and a second surface roughness of the plasma resistant ceramic coating is less than or equal to 100 μin.

6. The method of claim **4**, further comprising:

performing plasma spraying using a dry powder feedstock to deposit the additional ceramic coating on the component prior to deposition of the plasma resistant ceramic coating.

7. The method of claim **1**, wherein the stream of the ceramic particles is generated by evaporating a solvent from the slurry upon passing the slurry through the plasma sprayer, and wherein the solvent comprises at least one of ethanol, methanol, de-ionized water, or acetonitrile.

8. The method of claim **1**, wherein the component is selected from a group comprising a lid, a nozzle, a chuck, a showerhead, a liner kit, or a ring.

9. A method of forming a plasma resistant ceramic coating on a component of a processing chamber, the method comprising:

feeding a slurry comprising ceramic particles into a plasma sprayer; and

generating, with the plasma sprayer, a stream of the ceramic particles directed toward the component, wherein the stream of the ceramic particles forms the plasma resistant ceramic coating on the component upon contact with the component,

wherein a composition of the plasma resistant ceramic coating comprises 40 mol % to less than 100 mol % of Y_2O_3, greater than 0 mol % to 60 mol % of ZrO_2, and greater than 0 mol % to 10 mol % of Al_2O_3,

wherein the ceramic particles of the slurry comprise compositions that result in the composition of the plasma resistant ceramic coating upon contact with the component, and

wherein the component comprises an additional ceramic coating disposed thereon,

wherein the plasma resistant ceramic coating is formed over the additional ceramic coating, and wherein the additional ceramic coating is configured to minimize lattice mismatch with the plasma resistant ceramic coating,

wherein a first porosity of the additional ceramic coating is greater than 0.8%, and a second porosity of the plasma resistant ceramic coating is less than or equal to 0.8%, and

wherein a first surface roughness of the additional ceramic coating is greater than 100 μin, and a second surface roughness of the plasma resistant ceramic coating is less than or equal to 100 μin.

10. The method of claim **9**, wherein the plasma resistant ceramic coating is a crystalline coating, and wherein the additional ceramic coating is an amorphous coating.

11. The method of claim **9**, further comprising:

performing plasma spraying using a dry powder feedstock to deposit the additional ceramic coating on the component prior to deposition of the plasma resistant ceramic coating.

12. The method of claim **9**, wherein the stream of the ceramic particles is generated by evaporating a solvent from the slurry upon passing the slurry through the plasma sprayer, and wherein the solvent comprises at least one of ethanol, methanol, de-ionized water, or acetonitrile.

13. The method of claim **9**, further comprising:

after forming the plasma resistant ceramic coating, heating the plasma resistant ceramic coating to a temperature of up to about 2000° C.;

heat treating the component and the plasma resistant ceramic coating at the temperature of up to about 2000° C. for a time duration up to about 12 hours; and

forming a transition layer between the plasma resistant ceramic coating and the additional ceramic coating via the heat treating.

14. The method of claim **9**, wherein the component is selected from a group comprising a lid, a nozzle, a chuck, a showerhead, a liner kit, or a ring.

15. A method of forming a plasma resistant ceramic coating on a component of a processing chamber, the method comprising:

feeding a slurry comprising ceramic particles into a plasma sprayer; and

generating, with the plasma sprayer, a stream of the ceramic particles directed toward the component, wherein the stream of the ceramic particles forms the plasma resistant ceramic coating on the component upon contact with the component,

wherein a composition of the plasma resistant ceramic coating comprises 40 mol % to less than 100 mol % of Y_2O_3, greater than 0 mol % to 60 mol % of ZrO_2, and greater than 0 mol % to 10 mol % of Al_2O_3,

wherein the ceramic particles of the slurry comprise compositions that result in the composition of the plasma resistant ceramic coating upon contact with the component, and

after forming the plasma resistant ceramic coating, heating the plasma resistant ceramic coating to a temperature of up to about 2000° C.;

heat treating the component and the plasma resistant ceramic coating at the temperature of up to about 2000° C. for a time duration up to about 12 hours; and

forming a transition layer between the plasma resistant ceramic coating and the component or an additional ceramic coating disposed on the component via the heat treating.

16. The method of claim **15**, wherein the plasma resistant ceramic coating is a crystalline coating, and wherein the additional ceramic coating is an amorphous coating.

17. The method of claim **15**, further comprising:

performing plasma spraying using a dry powder feedstock to deposit the additional ceramic coating on the component prior to deposition of the plasma resistant ceramic coating.

18. The method of claim **15**, wherein the stream of the ceramic particles is generated by evaporating a solvent from

the slurry upon passing the slurry through the plasma sprayer, and wherein the solvent comprises at least one of ethanol, methanol, de-ionized water, or acetonitrile.

19. The method of claim **15**, wherein the slurry further comprises a polymer dispersant, and wherein the polymer dispersant comprises at least one of polyacrylic acid, ammonium polymethacrylate, an omega-3 fatty acid, or polyethylene glycol.

20. The method of claim **15**, wherein the component is selected from a group comprising a lid, a nozzle, a chuck, a showerhead, a liner kit, or a ring.

* * * * *