US009617740B2

(12) **United States Patent**
Bowden et al.

(10) **Patent No.: US 9,617,740 B2**
(45) **Date of Patent: *Apr. 11, 2017**

(54) **PEEL-AND-SET TILE SYSTEM**

(71) Applicants: **Alan K. Bowden**, Elkton, KY (US); **David J. Farrage, Jr.**, Costa Mesa, CA (US); **Kevin T. Broderick**, Taft, TN (US)

(72) Inventors: **Alan K. Bowden**, Elkton, KY (US); **David J. Farrage, Jr.**, Costa Mesa, CA (US); **Kevin T. Broderick**, Taft, TN (US)

(73) Assignees: **Alan Keith Bowden**, Fort Wayne, IN (US); **David J. Farrage, Jr.**, Costa Mesa, CA (US); **Kevin Thomas Broderick**, Taft, TN (US)

(*) Notice: Subject to any disclaimer, the term of this patent is extended or adjusted under 35 U.S.C. 154(b) by 0 days.

This patent is subject to a terminal disclaimer.

(21) Appl. No.: **14/612,930**

(22) Filed: **Feb. 3, 2015**

(65) **Prior Publication Data**

US 2015/0211236 A1 Jul. 30, 2015

Related U.S. Application Data

(62) Division of application No. 13/990,951, filed on May 31, 2013, now Pat. No. 8,980,426.

(51) **Int. Cl.**
B32B 37/02 (2006.01)
E04F 13/08 (2006.01)

(52) **U.S. Cl.**
CPC ***E04F 13/0885*** (2013.01); ***E04F 13/0862*** (2013.01); *Y10T 428/1476* (2015.01)

(58) **Field of Classification Search**
CPC E04F 13/0862; E04F 13/0885
See application file for complete search history.

Primary Examiner — Victor Chang
(74) *Attorney, Agent, or Firm* — Carson Boxberger, LLP

(57) **ABSTRACT**

A peel-and-set tile system is disclosed for being installed onto a substrate, along with a corresponding method of manufacture and installation. The system provides, in an exemplary embodiment, a tile body. An underside surface of the tile body provides a contact adhesive array for securing the tile body to the substrate, the contact adhesive array being positioned and configured for forming a perimeter gasket continuously about a perimeter of the underside surface of the tile body when it is secured to the substrate. A peel-away release liner is applied over the contact adhesive array and configured to be removed therefrom when the tile body is to be installed onto the substrate. When the tile body is secured to the substrate, the perimeter gasket forms a bond that substantially prevents liquid or contaminants from getting between the underside surface of the tile body and the substrate or compromising the installation.

3 Claims, 3 Drawing Sheets

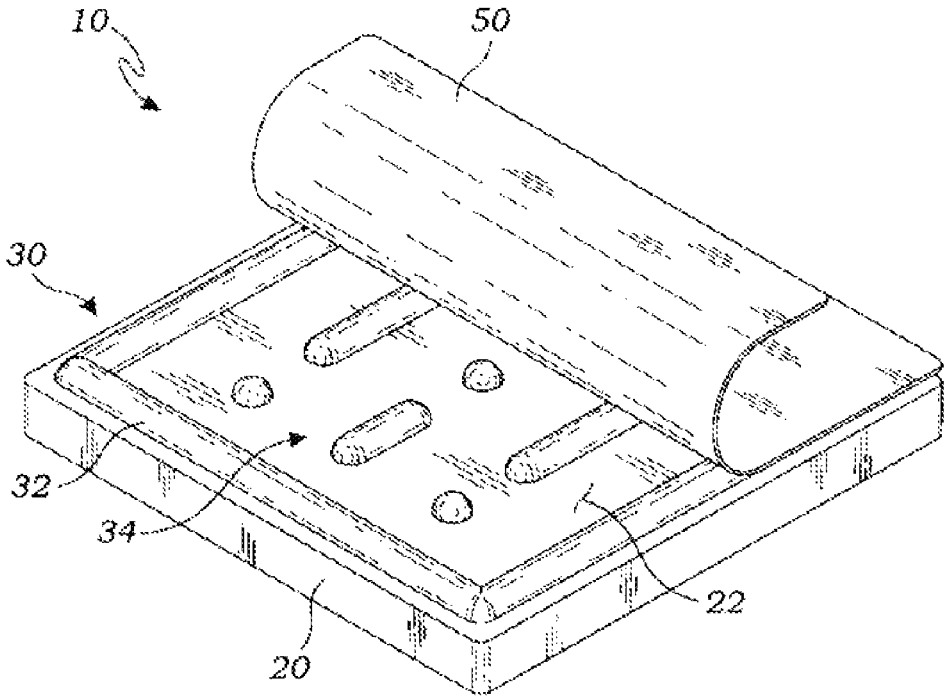

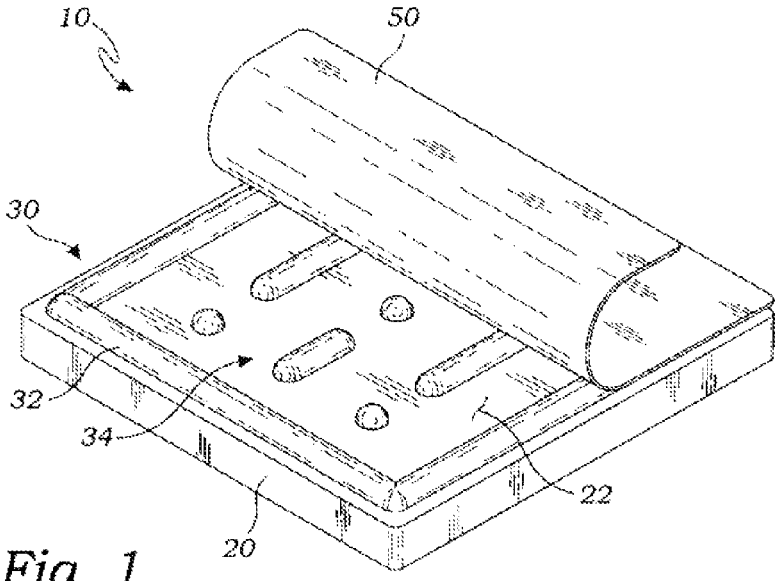

Fig. 1

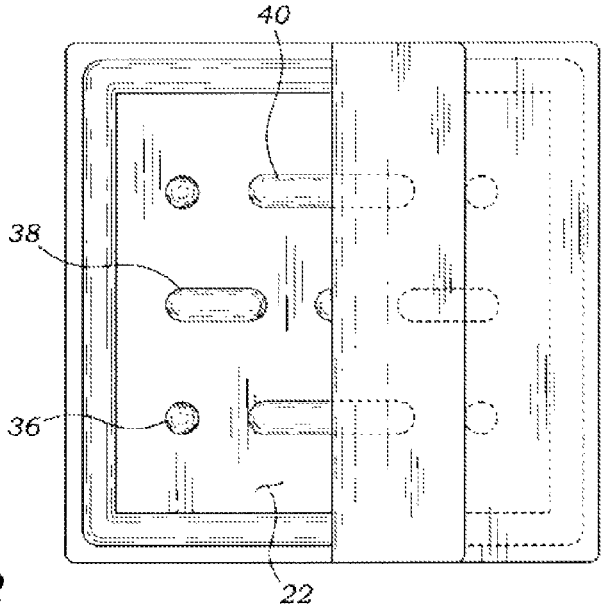

Fig. 2

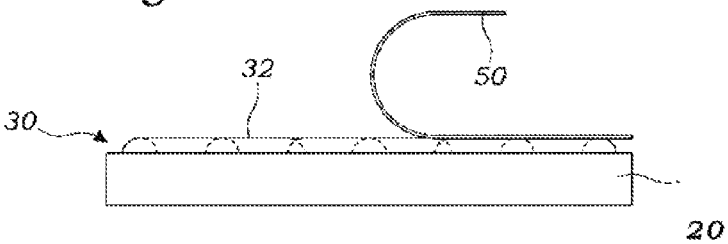

Fig. 3

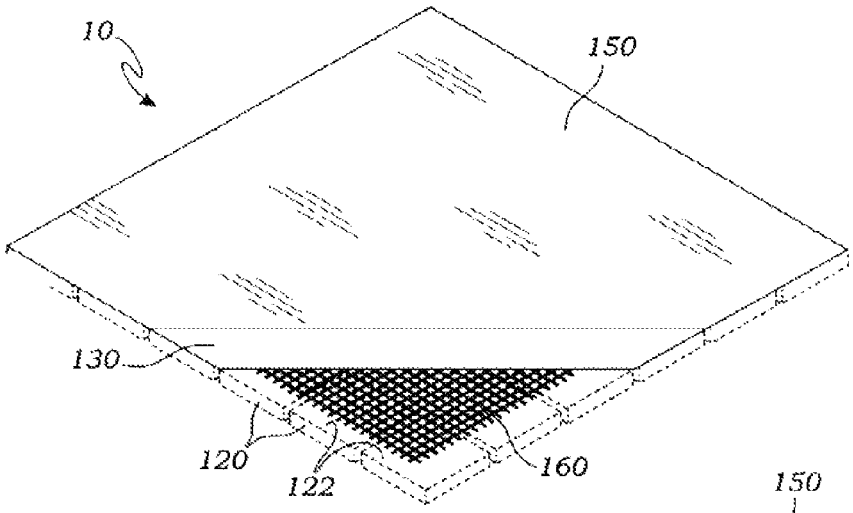

Fig. 4

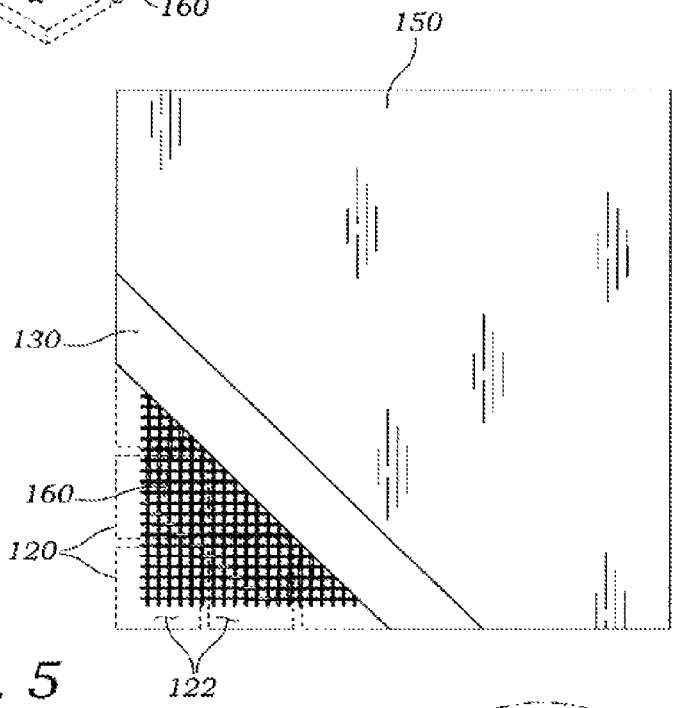

Fig. 5

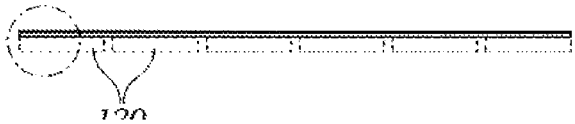

Fig. 6

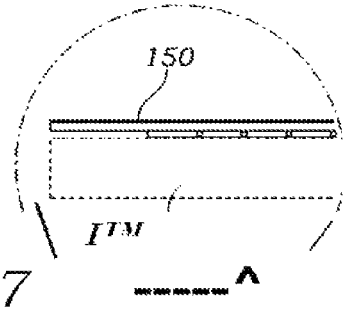

Fig. 7

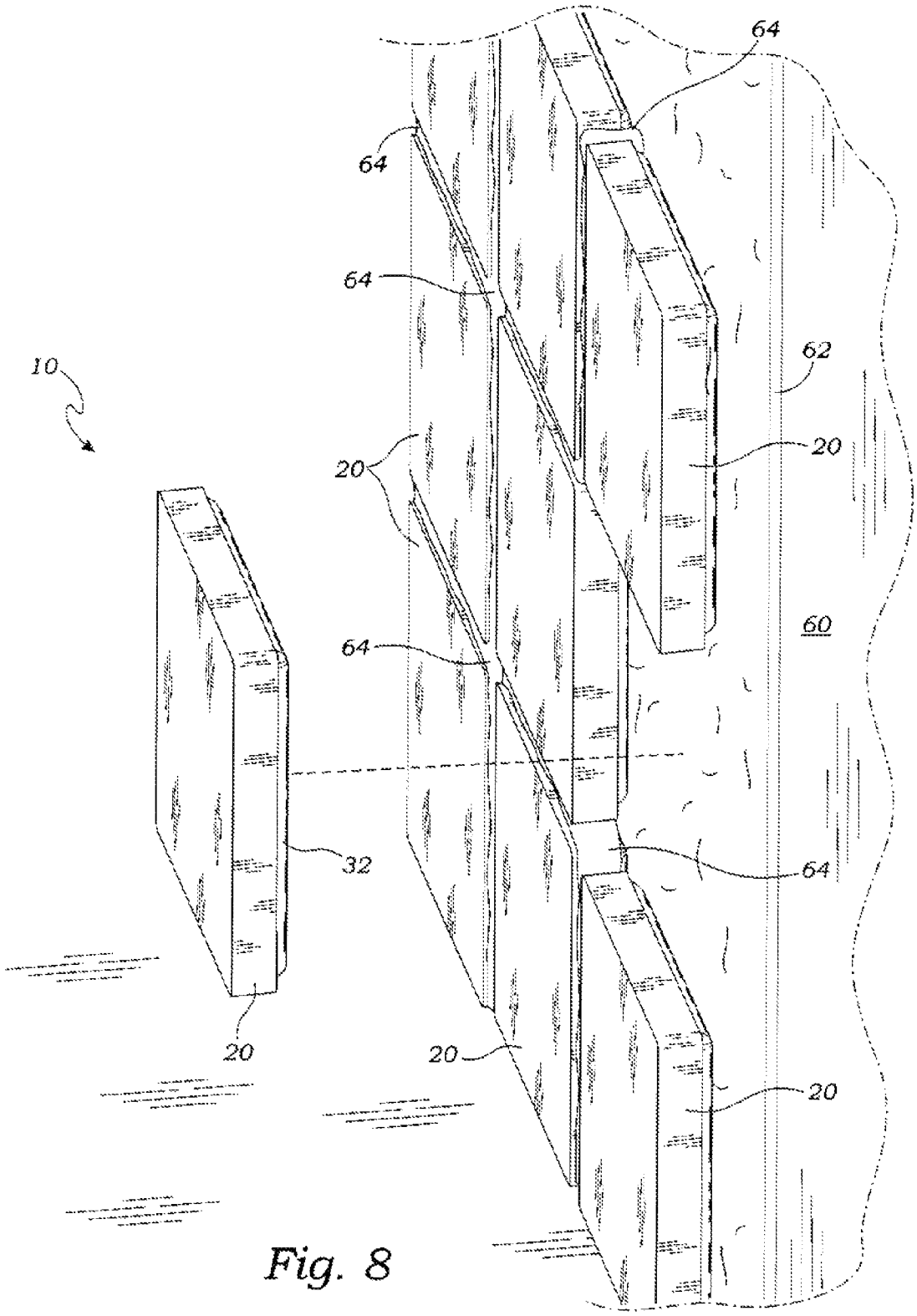

Fig. 8

PEEL-AND-SET TILE SYSTEM

RELATED APPLICATIONS

This application is a divisional application of copending U.S. patent application publication no. U.S. 2013-0284355, filed May 31, 2013 and entitled "Peel-and-Set Tile System." The contents of the aforementioned application are incorporated herein by reference.

INCORPORATION BY REFERENCE

Applicants hereby incorporate herein by reference any and all U.S. patents and U.S. patent applications cited or referred to in this application.

TECHNICAL FIELD

Aspects of this invention relate generally to tiles, and more particularly to peel-and-set tile systems involving ceramic, stone, glass, and other such relatively hard tiles.

BACKGROUND ART

By way of background, ceramic, porcelain, and other such glazed and fired tiles have been known and used in building construction for decades. To date, the installation of such tiles has been a very labor-intensive process, usually involving messy mortar, cement, or other such bonding agent that require a sufficient drying or cure time. Generally, the smoother and harder the surface, the more difficult the bond and thus the stronger the bonding agent must be to insure a strong and reliable installation. With porcelain tiles, this is a particular challenge, often requiring a separate acrylic or polymer to help the tiles stick, reducing their practical usage despite the tiles otherwise being very attractive and durable.

The following art defines the present state of this field:

U.S. Pat. No. 2,760,881 to Toulmin, Jr. is generally directed to a tile member comprising a glass fiber sheet having a ceramic coating on the upper surface thereof, and a suitable adhesive backing on the under surface thereof. The ceramic surface of the tile may contain a pattern of grooves if so desired. The adhesive layer on the under surface of the tile member is optional, but is preferable if the tile member is to be used as a wall or ceiling covering.

U.S. Pat. No. 3,583,889 to Califano et al. is generally directed to an apparatus for the production of adhesive-backed tile products. Tile products from a stack are moved in succession by a conveyor at a constant speed and in uniformly spaced relationship. A web of adhesive-coated protective material is applied over the moving tile products and bonded thereto. This web is then severed between each adjacent tile product by a cutting knife thereby producing an adhesive coated tile product with a protective sheet thereon which is removed when the tile products are installed.

U.S. Pat. No. 3,962,504 to Sherwin is generally directed to fired ceramic tiles having a rear surface provided with a series of fine ribs but is otherwise substantially planar that are attachable to a wall or similar surface, without the need to apply a fixative to the surface, by reason of a plurality of bodies of adhesive material distributed over the rear surface of the tile body and projecting therefrom to a thickness of 0.75 to 1 mm, the adhesive being a pressure-sensitive adhesive and being of such a nature that it will retain its coherent form both prior to and after mounting of the tile and will not flow or spread appreciably, each body of adhesive extending over a plurality of said ribs which are embedded

therein, having a flat outer surface and being spaced from adjacent bodies of adhesive and from the edges of the tile body, and the adhesive material being protected by a peel-off film.

U.S. Pat. No. 4,079,554 to Terwilliger is generally directed to a simulated exterior surface assembly for creating the appearance of brick, stone, or the like. A sheet of plastic material, preferably vinyl, is provided with a series of simulated brick face sections or the like, defined by lines of weakening, where such sections are separable one from another by ordinary flexing. The sheet is provided with a peel-away self-adhesive allowing the simulated sections to be readily adhered onto a suitable undersurface. An optional arrangement includes the use of a mortar colored vinyl self-adhering backing material which is first placed on the undersurface and thereafter the individual simulated sections are suitably disposed thereon.

U.S. Pat. No. 4,554,769 to Fujii et al. is generally directed to an adhesive-backed tile panel protected by a release sheet. The prefabricated tile panel comprises a substrate sheet composed of a core fabric and a heat-softening-adherent asphalt composition applied to the both surfaces of the fabric; an adhesive layer having convex and concave portions such as stripes of an adhesive not flowable but sticky at an ambient temperature; and tiles arranged regularly and secured to the asphalt composition layer of the substrate sheet. The convex portions and concave portions of the adhesive layer constitute the gaps through which air present between the tile panels and a substrate board can be purged upon installation of the tile panels. The tile panels can be installed readily on a substrate board having thereon horizontal indication means such as crosspieces by removing the release sheet, mounting the tile panels on the substrate board, and pressing the mounted tile panels to purge air present between the panels and the board through the gaps of the adhesive layer and to increase the effective adhesion areas of the adhesive layer. A unit substrate board having specified structures for assembling a preferred substrate board is also provided for installation of the tile panels.

U.S. Pat. No. 4,804,569 to Arisawa is generally directed to a unit tile comprising a tile member of a desired shape and thickness, which is made of a synthetic resinous material having flexibility, an adhesive layer formed on a rear side of the tile member, and a release paper attached to the surface of the adhesive layer to cover and protect the adhesive surface. The unit tile is formed of a plurality of tile members. The tile members are disposed on a thin, flexible substrate, leaving spaces corresponding to joints between the respective tile members. The rear side of the substrate has the adhesive layer which is covered by the release paper. This unit tile may have marginal portions usable as overlaps for splicing. With such a configuration of the unit tile, the unit tile may easily and accurately set on walls etc., while conforming it to the configuration of the setting walls etc.

U.S. Pat. No. 5,989,369 to Light is generally directed to a porcelain address tile that is bonded directly to the exterior surface of a brick wall with a structural adhesive. In order to hold the tile in place while the structural adhesive cures, a double-sided (peel and stick) adhesive material is applied to the rear surface of the porcelain tile. According to another embodiment of the present invention, a decorative construction module in the form of an address tile for incorporation into the wall of a structure includes a porcelain tile measuring approximately ⅜ inch thick which has an outer surface inscribed with name/number and/or address information thereon and a backing block fabricated out of expanded polystyrene material and being bonded to the porcelain tile

in order to create the completed module. The rectangular solid form of the module is sized and shaped so as to fit appropriately within a residential brick wall based upon the typical brick sizes and spacing of the mortar joints.

Japanese Patent Application No. 2001207619A to Sunasawa et al. is generally directed to a self adhesive tile set simple to peel the tile and capable of sufficiently displaying adhesion force even when the method for forming one opposite tile and an applying face different in the other adhesive pattern is adopted. In the self adhesive tile set wherein other kinds of adhesives are applied on the rear faces of the two tiles respectively and which is supplied in a state where the rear faces of both the tiles are stuck, one adhesive is a water soluble adhesive and/or an emulsion adhesive, the other adhesive is a solvent adhesive, if the respective adhesives are stuck on the adhesive faces, they are stuck, can be simply peeled by hands, and the respective adhesives remain on the respective applied face.

Japanese Patent Application No. 2001295449A to Iwai is generally directed to a tile, a tile panel and a tiling structure facilitating installation and removal of the tile and the tile panel to enable them to be easily replaced many times. The tile has viscous elements affixed to its back. A dry joint bar is interposed between vertically adjoining tiles and when they are affixed to a wall face. The viscous element should preferably have a thickness of 1 to 5 mm, particularly 2 to 5 mm, a Shore hardness of 5 to 35°, and a 180° peeling adhesive strength of 1.5 N/25 mm to 20 N/25 mm.

European Patent No. 2,066,853 and U.S. Patent Application Publication No. 2009/0233034 to Saunders et al. are generally directed to a tiling adhesive application system comprising a backing sheet with a series of parallel grooves extending thereacross and each carrying a bead of tiling adhesive. A release sheet is bonded to the edge margins of the backing sheet to form a sealed package. The backing sheet is transparent and of the same size as a tile to be adhered to a wall. The release sheet is peeled away to expose the adhesive which is then applied to the wall while carried by the backing sheet, whereafter the backing sheet is lifted away from the wall leaving the adhesive ready to bond a tile to the wall.

While the prior art described above teaches, among other things, tiles having a pressure sensitive adhesive with a peel-away layer, it fails to teach such a tile having, in certain embodiments, a contact adhesive array positioned and configured for forming a perimeter gasket continuously about a perimeter of an underside surface of the tile when it is secured to a substrate. Furthermore, the prior art fails to teach the substrate being coated, in certain embodiments, with a bond enhancer configured for providing an etched-like surface on the substrate for an improved, hook-and-loop fastening type engagement with the tile. Aspects of the present invention fulfill these needs and provide further related advantages as described in the following disclosure.

DISCLOSURE OF INVENTION

Aspects of the present invention teach certain benefits in construction and use which give rise to the exemplary advantages described below.

What is proposed according to aspects of the present invention is a peel-and-set approach to ceramic, porcelain and other hard tiles, which is heretofore unknown in the marketplace in any practical or effective system. Essentially, in an exemplary embodiment, after the tile is formed, in a secondary factory operation a contact adhesive array is applied to the back of each tile or mosaic of tiles. A peel-away laminate or layer is then applied over the adhesive, which is later removed for installation of the tile(s). To further facilitate installation of the tile(s), and particularly adhesion of the contact adhesive to the substrate on which the tile(s) is to be installed, the substrate is first coated with a bond enhancer that has a "Velcro" effect when in contact with the adhesive, further strengthening the bond between the tile and the underlying surface.

Other features and advantages of aspects of the present invention will become apparent from the following more detailed description, taken in conjunction with the accompanying drawings, which illustrate, by way of example, the principles of aspects of the invention.

BRIEF DESCRIPTION OF DRAWINGS

The accompanying drawings illustrate aspects of the present invention. In such drawings:

FIG. **1** is a perspective view of an exemplary embodiment of a peel-and-set tile apparatus;

FIG. **2** is a top view thereof;

FIG. **3** is a side view thereof;

FIG. **4** is a perspective view of a further exemplary embodiment of a peel-and-set tile apparatus, employing a mosaic sheet tile comprising multiple tile bodies;

FIG. **5** is a top view thereof;

FIG. **6** is a side view thereof;

FIG. **7** is an enlarged partial side view thereof; and

FIG. **8** is a perspective view of the exemplary peel-and-set tile apparatus being installed onto a substrate.

MODES FOR CARRYING OUT THE INVENTION

The below described drawing figures illustrate aspects of the invention in at least one of its exemplary embodiments, which are further defined in detail in the following description.

With reference to the perspective view shown in FIG. **1** of an exemplary peel-and-set tile apparatus **10** according to aspects of the present invention, the tile apparatus **10** includes a tile body **20**, a contact adhesive array, generally denoted as **30**, applied to the underside surface **22** of the tile body **20**, and a release liner **50** applied over the contact adhesive array **30** substantially parallel to the underside surface **22** of the tile body **20** and configured to be removed therefrom when the tile apparatus **10** is to be installed on a substrate **60**, more about which is said below. Once more, the tile body **20** may be ceramic, porcelain, or any other relatively hard tile now known or later developed. While the tile body **20** is shown as being substantially square and measuring approximately four inches by four inches (4"× 4"), it will be appreciated that other shapes and sizes, such as a rectangle of various dimensions, may be employed in the peel-and-set tile system of the present invention without departing from its spirit and scope.

As shown in FIG. **1**, and with further reference to the top view of FIG. **2**, in the exemplary embodiment wherein a single tile body **20** is employed, versus a mosaic sheet, more about which is said below particularly in connection with FIGS. **4-7**, the contact adhesive array **30** formed on the underside surface **22** of the tile body **20** generally comprises a continuous perimeter gasket **32** and an infill pattern, generally denoted as **34**, bounded by the perimeter gasket **32**. It will be appreciated by those skilled in the art that the continuous perimeter gasket **32** is configured to form a complete perimeter about the underside surface **22** of the tile

body **20** when it is pressed into place on the substrate **60**, thereby forming a bond that will not allow water or other liquids or contaminants to get behind the tile body **20** once installed, or between the underside surface **22** of the tile body **20** and the substrate **60**, and thereby compromise the installation. It will be further appreciated that the infill pattern **34** is one of a variety of spaced-apart contact adhesive patterns on the underside surface **22** of the tile body **20** to help insure a good bond of the central area of the tile body **20** to the substrate **60**, such that the particular infill pattern **34** shown as being comprised of contact adhesive dots **36**, contact adhesive small bars **38**, and contact adhesive large bars **40** is to be understood as being merely illustrative of aspects of the present invention and not limiting. By way of further example, a pattern of just dots or just bars of one or more sizes could be employed, as could a single continuous coat—preferably appbed in a swirl pattern—or layer of contact adhesive rather than a defined perimeter separate from an infill pattern. Preferably, at least the perimeter of the contact adhesive array **30** of whatever configuration would be continuous, again, so as to prevent the passage of moisture or contaminants into the space behind the tile body **20** between its underside surface **22** and the substrate **60** on which the tile body **20** is installed. In the exemplary embodiment, the entire contact adhesive array **30**, or both the continuous perimeter gasket **32** and the infill pattern **34**, is formed of a hot melt pressure sensitive adhesive ("HMPSA") that is appbed to the underside surface **22** of the tile body **20** using a hot-roller process, which HMPSA material insures stability for the pre-installation period and the life of the product once installed. As shown in the side view of the tile apparatus **10** of FIG. **3**, the perimeter gasket **32** and the infill pattern **34** are preferably of the same size or contact adhesive bead height, in the exemplary embodiment being at least 2.2 mm or roughly 0.1", though the size and height of the contact adhesive array **30** may also vary depending on, for example, the type of tile body (material, underside surface roughness, and overall size and shape and hence weight), details of the installation (vertical or horizontal orientation and degree of tile spacing), and the type and surface treatment of the substrate **60**. The ability to alter the HMPSA according to application/thickness and weight allows the present system to accommodate various sizes of tile. Moreover, those skilled in the art will appreciate that other contact or pressure-sensitive adhesives of various kinds, whether now known or later developed, and in various patterns and thicknesses may be employed in the peel-and-set tile system according to aspects of the present invention without departing from its spirit and scope. With continued reference to FIGS. **1-3**, the release liner **50** is in the exemplary embodiment a silicone coated material that is appbed to the back of each treated tile body **20** in contact with the contact adhesive array **30** to assist in the packaging and handling of each finished tile apparatus **10**. It will be appreciated that the silicone coating facilitates the removal of the liner **50** from the tile body **20**, and the contact adhesive array **30** particularly, when the tile apparatus **10** is to be installed on the substrate **60**, but that other materials and coatings thereon both now known and later developed may be employed in the release liner **50** without departing from the spirit and scope of the present invention.

As illustrated in FIG. **8**, to further facilitate installation of such a tile apparatus **10** as shown and described in connection with FIGS. **1-3**, and particularly adhesion of the contact adhesive array **30** formed on the underside surface **22** of the tile body **20** to the substrate **60** on which the tile apparatus **10** is to be installed, the substrate **60**, in the exemplary embodiment, is first coated with a bond enhancer **62** that has a hook-and-loop fastening effect when in contact with the contact adhesive array **30**, further strengthening the bond between the tile body **20** and the underlying substrate **60**. The bond enhancer **62** is preferably a "high solids" content primer with acceptable sheer strength, such as latex, so as to also dry relatively quickly and provide a relatively "sticky" surface, or an uneven surface on the micron level, somewhat analogous to a surface that has been polished and then etched. It will be appreciated that the substrate **60** so treated with such a high solids bond enhancer **62** will thus cover over or coat any loose particles on the substrate **60** that would weaken any bond while at the same time providing an "etched-like" surface for improved bonding or mechanical engagement thereto by the HMPSA or other contact adhesive array **30**. The bond enhancer **62** may be applied to the substrate **60** with a sponge roller, a sprayer, or any other suitable equipment and technique now known or later developed. Again, given adequate drying time, the bond enhancer **62** provides a barrier that secures any loose fiber or particles to the substrate **60** as well as insuring improved bond characteristics for the tile body **20** when applied.

In use, then, the surface on which the tile apparatus **10** is to be installed need only be relatively smooth and dirt/dust free so as to get sound adhesion. The substrate **60** can be traditional wall tile surfaces, including paper-faced gypsum board (painted, primed or unfinished), cement backer boards or fiber backer boards, for example. Preferably, once again, the surface of the substrate **60** is primed with the bond enhancer **62** to etch and waterproof it, making it ready for the tile installation, particularly in a bath or kitchen application where there will be significant moisture exposure. Once the substrate **60** is thus prepped, the peel-away release liner **50** on the back of the tile apparatus **10** is simply removed and the tile body **20** stuck in position by pressing the contact adhesive array **30** against the substrate **60**. Preferably, the installed tiles **20** are grouted with a flexible grout **64** to achieve maximum bond and strength, which can be done immediately after placing the tiles **20** rather than waiting twenty-four hours or more for mortar to set as in conventional tile installations. It will thus be appreciated that such a process is simpler than dealing with mortar, concrete or other such bonding agents and, as testing has proven, is equally or more durable as well. Specifically, the present system is designed to overcome the convex and concave natural variations in ceramic, stone and glass tiles. It also overcomes flatness and composition variances and requires no wet mortars or trowel applied setting pastes, the HMPSA or other contact adhesive applied as described herein adequately not only taking up such variances but actually meeting or exceeding the coverage requirement per ANSI standards, again, without the need for mortar or the like.

Turning now to FIGS. **4-7**, there is shown an alternative tile system, according to aspects of the present invention, wherein a single mosaic sheet tile apparatus **110** comprising multiple tile bodies **120** is employed. In such a system, as best shown in the perspective view of FIG. **4**, a group of spaced-apart tile bodies **120**, here a six-by-six (6×6) matrix, for example, is held together as a single mosaic sheet by first laying against the underside surfaces **122** of the tile bodies **120** a binding mesh **160** and then applying as a single coat thereover—preferably in a swirl pattern—the contact adhesive array **130**. It will be appreciated that the contact adhesive array **130**, as again, for example, being an HMPSA material that is applied through a hot roller process, with the appropriate temperatures and pressures, will upon initial

application partially flow in and through the openings in the binding mesh **160** so as to simultaneously stick to and affix the binding mesh **160** to the underside surfaces **122** of the tile bodies **120** while also leaving sufficient contact adhesive **130** above the binding mesh **160**, or on the side of the binding mesh **160** opposite the tile bodies **120**, so as to provide for the installation of the mosaic sheet tile apparatus **110** to the substrate **60** in a manner analogous to that described above in connection with FIGS. **1-3** and a single tile apparatus **10**. Accordingly, to prepare the mosaic sheet tile apparatus **110** for storage and transport prior to use, and particularly to guard the contact adhesive array **130** applied to the backs of the individual tile bodies **120** over the binding mesh **160**, a silicone coated release liner **150** or the like is again removably applied over the contact adhesive array **130** substantially parallel to the binding mesh **160** and the mosaic of tile bodies **120**. In use, once the substrate **60** or surface on which the mosaic sheet tile apparatus **110** is to be installed is prepped, the release liner **150** is simply removed and the mosaic sheet tile apparatus **110** is positioned and pressed into place on the substrate **60**. It will again be appreciated by those skilled in the art that by not having to apply mortar, concrete, or other such material to the substrate **60** in order to install the tiles and then wait on the mortar to set before finishing the installation, tremendous gains in efficiency and simplicity are realized through the peel-and-set tile system according to aspects of the present invention, whether installed as prefabricated single tiles or mosaic tile sheets, either way having an HMPSA or other contact adhesive array conveniently pre-applied to the backs of the tiles and preserved until installation through a removable release liner. It will once again be appreciated that the contact adhesive array being continuous at least about the perimeter of each tile back **122**, and in the case of the mosaic sheet tile apparatus **110** being a substantially continuous layer over the backs of all the tile bodies **120**, serves to form a stronger initial bond through adequate surface-to-surface contact with the underlying substrate **60** and to render such bond longer lasting by substantially preventing moisture or other contaminants to get behind the tiles, between the tile bodies **120** and the substrate **60**. To complete the installation, which again can be done immediately after the peel-and-set tiles **110** are pressed into place on the substrate **60**, a flexible grout **64** or the like may be applied between the tiles **120** to further anchor and seal the tiles **120** in place. It is noted that the top view of the mosaic sheet tile apparatus **110** of FIG. **5** shows much the same details as FIG. **4**, while FIGS. **6** and **7** provide a side view and an enlarged partial side view, respectively, of the same exemplary mosaic sheet tile apparatus **110** of FIGS. **4** and **5**.

Based on the foregoing, it will be appreciated that there is herein disclosed a convenient and efficient peel-and-set tile system wherein individual tiles or mosaic sheets (tiles attached together on a fiber mesh sheet) are pre-treated with a continuous application of a hot melt pressure sensitive adhesive ("HMPSA") or other such contact adhesive array at least about the perimeter of the underside surface of each tile body, which insures stability for the pre-installation period and the life of the product once installed. Upon removal of a release liner, such prefabricated tiles can then simply be pressed onto a prepared surface by hand and so achieve a permanent bond. The HMPSA or other contact adhesive being applied in a substantially continuous array, whether by hand on individual tiles or by continuous roll coat over tiles or mosaic sheets, provides a gasket effect about the entire perimeter of the tile back as shown, which seals the backs of the tiles against bond failure due to hydrostatic pressure or other contaminants that may breach the space between tile and substrate. The characteristics of the HMPSA, together with the bond enhancer, insure a strong and secure bond.

To summarize, regarding the exemplary peel-and-set tile system of the present invention as employed in connection with ceramic, porcelain and other relatively hard tiles, it will be appreciated that a system is provided for relatively simple and efficient installation of such tiles by avoiding the use of mortars and the like and their associated set times and at the same time providing a press-on permanent bond that by its mechanical and geometric properties is yet relatively stronger and less prone to failure. Because the principles of the invention may be practiced in a number of configurations of the peel-and-set tile system beyond those shown and described, it is to be understood that the invention is not in any way limited by the exemplary embodiments and is able to take numerous forms without departing from the spirit and scope of the invention.

It should be noted that the various features of each of the above-described embodiments may be combined in any logical manner and are intended to be included within the scope of the present invention. It will also be appreciated by those skilled in the art that the present invention is not limited to the particular geometries and materials of construction disclosed, but may instead entail other functionally comparable structure, now known or later developed, without departing from the spirit and scope of the invention. Furthermore, while aspects of the invention have been described with reference to at least one exemplary embodiment, it is to be clearly understood by those skilled in the art that the invention is not limited thereto. Rather, the scope of the invention is to be interpreted only in conjunction with the appended claims and it is made clear, here, that the inventors believe that the claimed subject matter is the invention.

What is claimed is:

1. A peel-and-set tile system comprising: an at least one tile body; a substrate on which the at least one tile body is to be installed, the substrate coated with a bond enhancer configured for providing an etched-like surface on the substrate for improved engagement with the tile body;

an underside surface of each of the at least one tile body providing a contact adhesive array for securing the tile body to the substrate, the contact adhesive array positioned and configured for forming a perimeter gasket continuously about a perimeter of the underside surface of the tile body when it is secured to the substrate; and a peel-away release liner applied over the contact adhesive array, substantially parallel to the underside surface of the at least one tile body and configured to be removed therefrom when the tile body is to be installed onto the substrate; whereby, with the at least one tile body secured to the substrate, a hook-and-loop fastening effect is achieved between the bond enhancer and contact adhesive array for strengthening the bond between the tile body and substrate, while the perimeter gasket forms a bond that substantially prevents liquid or contaminants from getting between the underside surface of the tile body and the substrate or compromising the installation.

2. The peel-and-set tile system of claim **1**, wherein the bond enhancer is a high solids content primer with sufficient sheer strength to maintain the bond with the contact adhesive array.

3. The peel-and-set tile system of claim **1**, further comprising a flexible grout formed about each of the at least one tile body and configured for strengthening the bond between the tile body and substrate.

* * * * *