US012091864B2

(12) **United States Patent**
Taylor, Jr. et al.

(10) **Patent No.: US 12,091,864 B2**
(45) **Date of Patent: Sep. 17, 2024**

(54) **INSULATED WALL PANEL**

(71) Applicant: **DDP Specialty Electronic Materials US, LLC.**, Wilmington, DE (US)

(72) Inventors: **Charles David Taylor, Jr.**, Salisbury, NC (US); **Paul Addison Brown**, Salisbury, NC (US); **Berthold Mueller**, Salisbury, NC (US); **Randal Scott Hoffner**, Salisbury, NC (US); **Stewart McIntyre Adams**, Salisbury, NC (US)

(73) Assignee: **DDP Specialty Electronic Materials US, LLC.**, Wilmington, DE (US)

(*) Notice: Subject to any disclaimer, the term of this patent is extended or adjusted under 35 U.S.C. 154(b) by 0 days.

(21) Appl. No.: **18/339,542**

(22) Filed: **Jun. 22, 2023**

(65) **Prior Publication Data**

US 2023/0340790 A1 Oct. 26, 2023

Related U.S. Application Data

(63) Continuation of application No. 15/907,503, filed on Feb. 28, 2018, now abandoned, which is a (Continued)

(51) **Int. Cl.**
B29C 44/12 (2006.01)
E04C 2/04 (2006.01)
(Continued)

(52) **U.S. Cl.**
CPC ***E04F 13/0873*** (2013.01); ***B29C 44/12*** (2013.01); ***E04C 2/04*** (2013.01);
(Continued)

(58) **Field of Classification Search**
CPC ... E04F 13/0873; E04F 13/075; E04F 13/077; E04F 13/0832; E04F 13/0862;
(Continued)

(56) **References Cited**

U.S. PATENT DOCUMENTS

2,064,789 A 12/1936 Farber
2,170,165 A 8/1939 Strong
(Continued)

FOREIGN PATENT DOCUMENTS

AU 2010101323 A4 1/2011
DE 2361018 A1 6/1978
JP 08189275 A 7/1996

OTHER PUBLICATIONS

2 Page PDF Form the US Department of Energy Title Guide To Home Insulation, Oct. 2010.
(Continued)

Primary Examiner — Monica A Huson
Assistant Examiner — Kelsey C Grace
(74) *Attorney, Agent, or Firm* — Shumaker, Loop & Kendrick, LLP; S. Alexander Long, Jr.

(57) **ABSTRACT**

The invention is related to a method of manufacturing a wall panel and a wall panel system. The method includes forming a glass-fiber reinforced cementitious layer including the steps of: pouring or injecting a slurry of uncured cementitious product into a mold, embedding glass fiber reinforcing material therein, and curing the cementitious product to obtain a cured cementitious product having a first side and a second side; and applying, to the second side of the cured cementitious product, an insulation layer, the insulation layer comprising a foam.

21 Claims, 5 Drawing Sheets

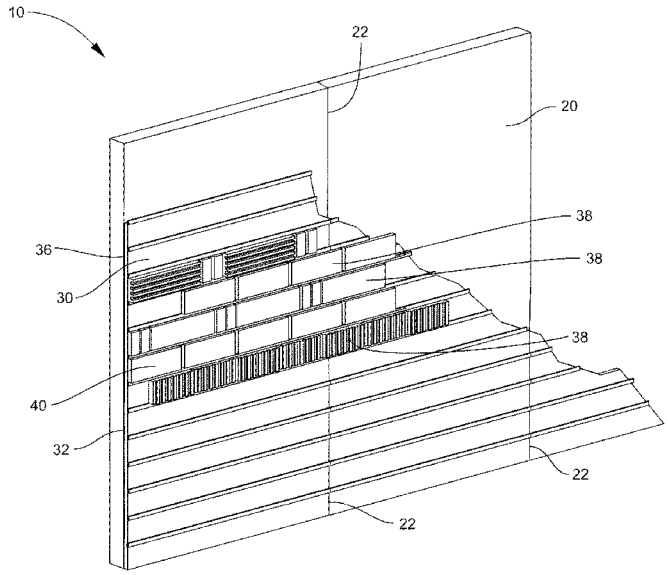

Related U.S. Application Data

continuation of application No. 15/138,638, filed on Apr. 26, 2016, now Pat. No. 9,957,722, which is a continuation of application No. 14/039,101, filed on Sep. 27, 2013, now Pat. No. 9,353,523.

(60) Provisional application No. 61/706,148, filed on Sep. 27, 2012.

(51) **Int. Cl.**

E04F 13/075	(2006.01)
E04F 13/077	(2006.01)
E04F 13/08	(2006.01)
E04F 13/14	(2006.01)
E04F 13/16	(2006.01)
E04C 2/288	(2006.01)

(52) **U.S. Cl.**

CPC ***E04F 13/075*** (2013.01); ***E04F 13/077*** (2013.01); ***E04F 13/0832*** (2013.01); ***E04F 13/0862*** (2013.01); ***E04F 13/0866*** (2013.01); ***E04F 13/0875*** (2013.01); ***E04F 13/14*** (2013.01); ***E04F 13/165*** (2013.01); *E04C 2/288* (2013.01)

(58) **Field of Classification Search**

CPC ... E04F 13/0866; E04F 13/0875; E04F 13/14; E04F 13/165; B29C 44/12; E04C 2/04; E04C 2/288

See application file for complete search history.

(56) **References Cited**

U.S. PATENT DOCUMENTS

2,198,466	A	4/1940	Stolze	
2,825,221	A	3/1958	Brouk	
3,304,673	A	2/1967	Ramoneda	
3,350,827	A	11/1967	Sugar	
3,362,116	A	1/1968	Murphy	
3,602,476	A	8/1971	Iragorri	
3,605,369	A	9/1971	Merrill et al.	
3,646,715	A	3/1972	Pope	
3,715,417	A	2/1973	Pope	
3,740,909	A	6/1973	Stinnes	
3,760,546	A	9/1973	Martin	
3,842,559	A	10/1974	Payne	
3,868,801	A	3/1975	Weiner	
3,899,855	A	8/1975	Gadsby	
3,965,635	A	6/1976	Renkert	
3,991,252	A	11/1976	Kolakowski	
4,031,682	A	6/1977	Renkert	
4,037,006	A	7/1977	Roberts	
4,159,361	A	6/1979	Schupack	
4,203,788	A	5/1980	Clear	
4,219,984	A	9/1980	De San	
4,296,789	A	10/1981	Schramm	
4,298,413	A	11/1981	Teare	
4,349,398	A	9/1982	Kearns	
4,388,366	A	6/1983	Rosato	
4,407,104	A	10/1983	Francis	
4,494,349	A	1/1985	Clements	
4,506,486	A	3/1985	Culpepper, Jr.	
4,614,013	A	9/1986	Stevenson	
4,617,219	A	10/1986	Schupack	
4,646,498	A	3/1987	Schneller	
4,657,798	A	4/1987	Gulhem	
4,788,808	A	12/1988	Slocum	
4,816,091	A	3/1989	Miller	
4,916,004	A	4/1990	Ensminger	
4,920,716	A	5/1990	Coffey	
4,944,127	A	7/1990	Clear	
5,003,743	A	4/1991	Bifano	
5,007,532	A	4/1991	Binish	
5,009,387	A	4/1991	Scott	
5,231,813	A	8/1993	Drawdy	
5,280,689	A	1/1994	Mill	
5,394,672	A	3/1995	Seem	
5,502,940	A	4/1996	Fifield	
5,600,929	A	2/1997	Morris	
5,626,936	A	5/1997	Alderman	
5,631,097	A *	5/1997	Andersen	B32B 37/00 428/312.4
5,681,639	A	10/1997	Minagawa	
5,715,637	A	2/1998	Hesterman	
5,735,092	A	4/1998	Clayton	
5,836,572	A	11/1998	Sugiyama	
5,839,251	A	11/1998	Weinstein	
6,044,604	A	4/2000	Clayton	
6,240,691	B1	6/2001	Holzkaemper	
6,360,505	B1	3/2002	Johns	
6,516,578	B1	2/2003	Hunsaker	
6,701,683	B2	3/2004	Messenger	
6,857,248	B2	2/2005	Ouellet et al.	
6,951,086	B2	10/2005	Passeno	
7,165,374	B2	1/2007	Ohanesian	
7,641,812	B2	1/2010	Alderman	
7,658,050	B2	2/2010	Bouchard	
7,762,040	B2	7/2010	Wilson	
7,871,054	B2	1/2011	Walters	
7,908,814	B2	3/2011	Wilson	
8,287,997	B2	8/2012	Paradis	
8,273,415	B2	9/2012	Porter	
8,444,789	B2	5/2013	Guo	
8,621,801	B2	1/2014	Bouchard	
8,627,625	B2	1/2014	Bouchard	
9,234,355	B2	1/2016	Sealock et al.	
9,303,403	B2	4/2016	Bolin	
9,353,523	B2	5/2016	Taylor, Jr.	
9,809,981	B2	11/2017	Ciuperca	
9,957,722	B2	5/2018	Taylor, Jr. et al.	
9,963,885	B2	5/2018	Taylor, Jr.	
2002/0182953	A1	12/2002	Porter	
2003/0113520	A1 *	6/2003	Takahashi	D21H 27/28 428/201
2003/0213212	A1	11/2003	Passeno	
2005/0028476	A1	2/2005	Bouchard et al.	
2005/0076611	A1	4/2005	Crawford	
2005/0229504	A1	10/2005	Bennet	
2005/0229524	A1	10/2005	Bennet	
2005/0257469	A1	11/2005	Bennet	
2006/0174572	A1	8/2006	Tonyan	
2007/0261340	A1	11/2007	Cecilio	
2008/0066412	A1	3/2008	Franco et al.	
2009/0011207	A1	1/2009	Dubey	
2009/0211692	A1	8/2009	Krebs	
2010/0095629	A1	4/2010	Taylor	
2010/0126114	A1	5/2010	Sadler	
2010/0199586	A1	8/2010	Martineau	
2010/0297411	A1	11/2010	Tsai	
2011/0239566	A1	10/2011	Ciuperca	
2011/0238916	A1	11/2011	Pardue, Jr.	
2012/0266554	A1	10/2012	Fifield	
2014/0069050	A1	3/2014	Bolin	
2014/0083040	A1	3/2014	Taylor	
2014/0093679	A1	4/2014	Okamoto	
2014/0234560	A1	8/2014	Miyata	
2015/0052838	A1	2/2015	Ritchie	
2016/0237692	A1	8/2016	Taylor, Jr. et al.	
2016/0280879	A1	9/2016	Brannum	
2017/0037639	A1	2/2017	Taylor, Jr.	
2018/0187420	A1	7/2018	Taylor	
2019/0119927	A1	4/2019	Hunsaker	
2021/0310255	A1	10/2021	Taylor	
2022/0090387	A1	3/2022	Hunsaker	

OTHER PUBLICATIONS

International Search Report for PCT/US2016/029954 Dated Oct. 7, 2016 10 Pages.

* cited by examiner

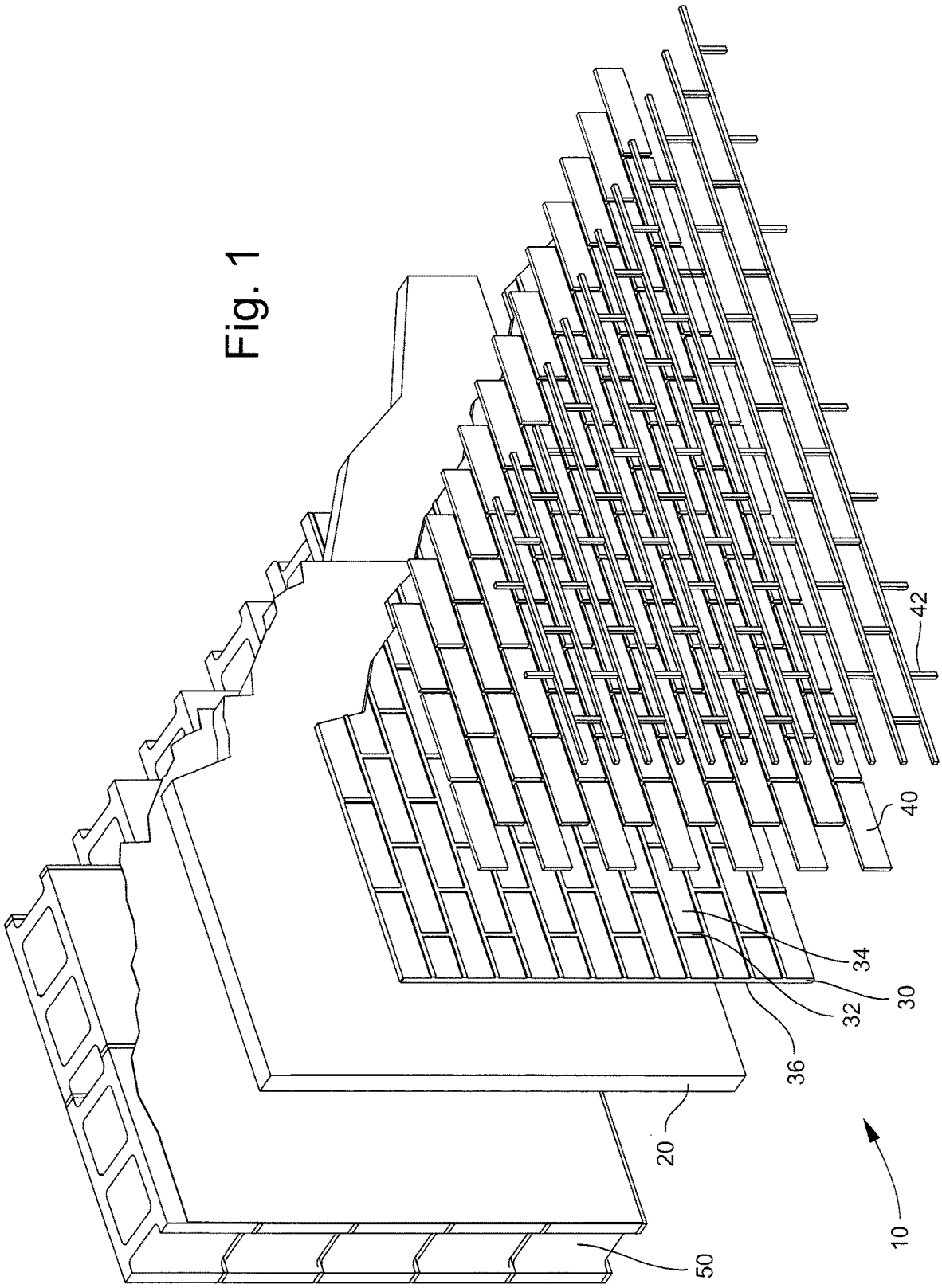

Fig. 1

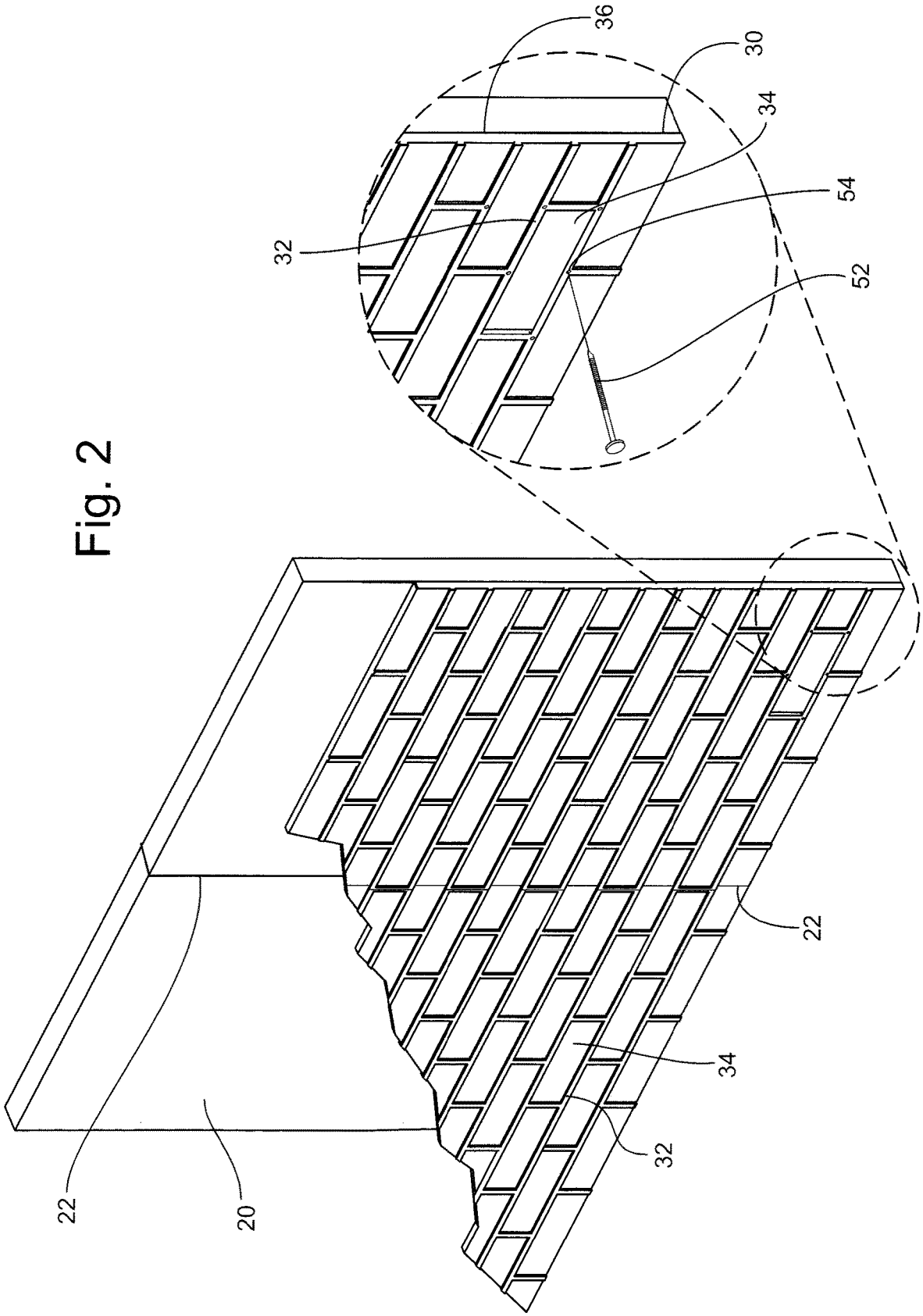

Fig. 2

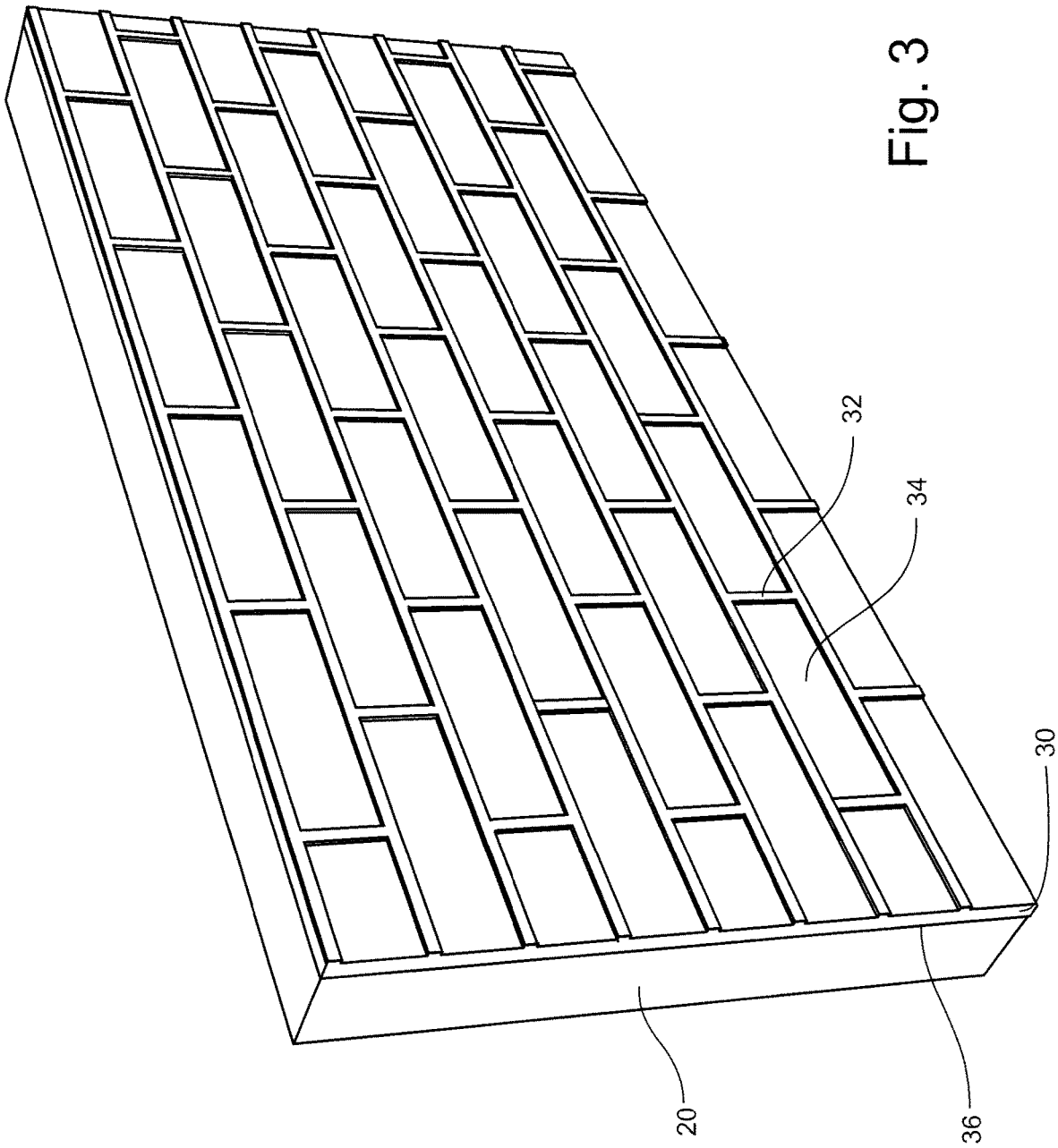

Fig. 3

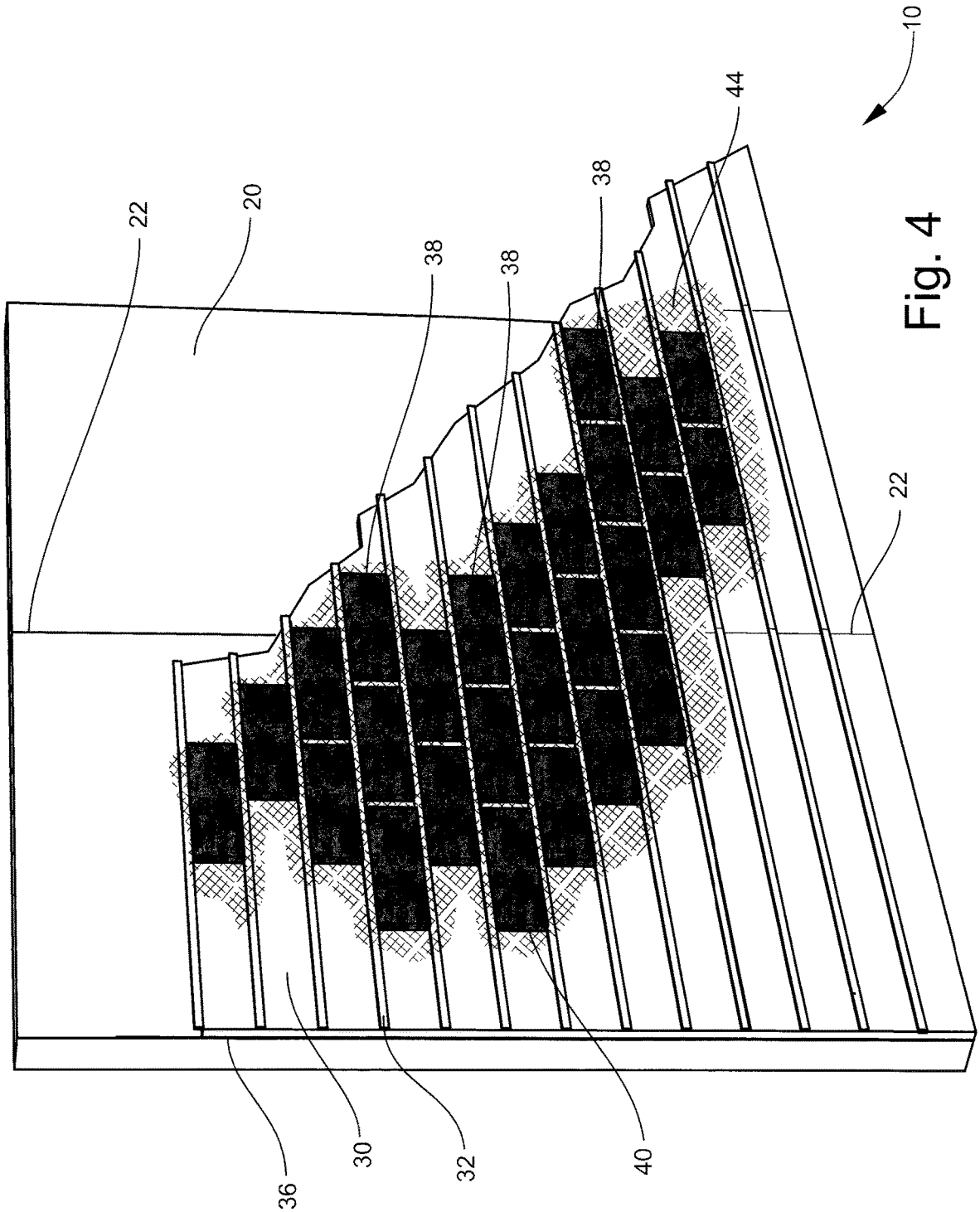

Fig. 4

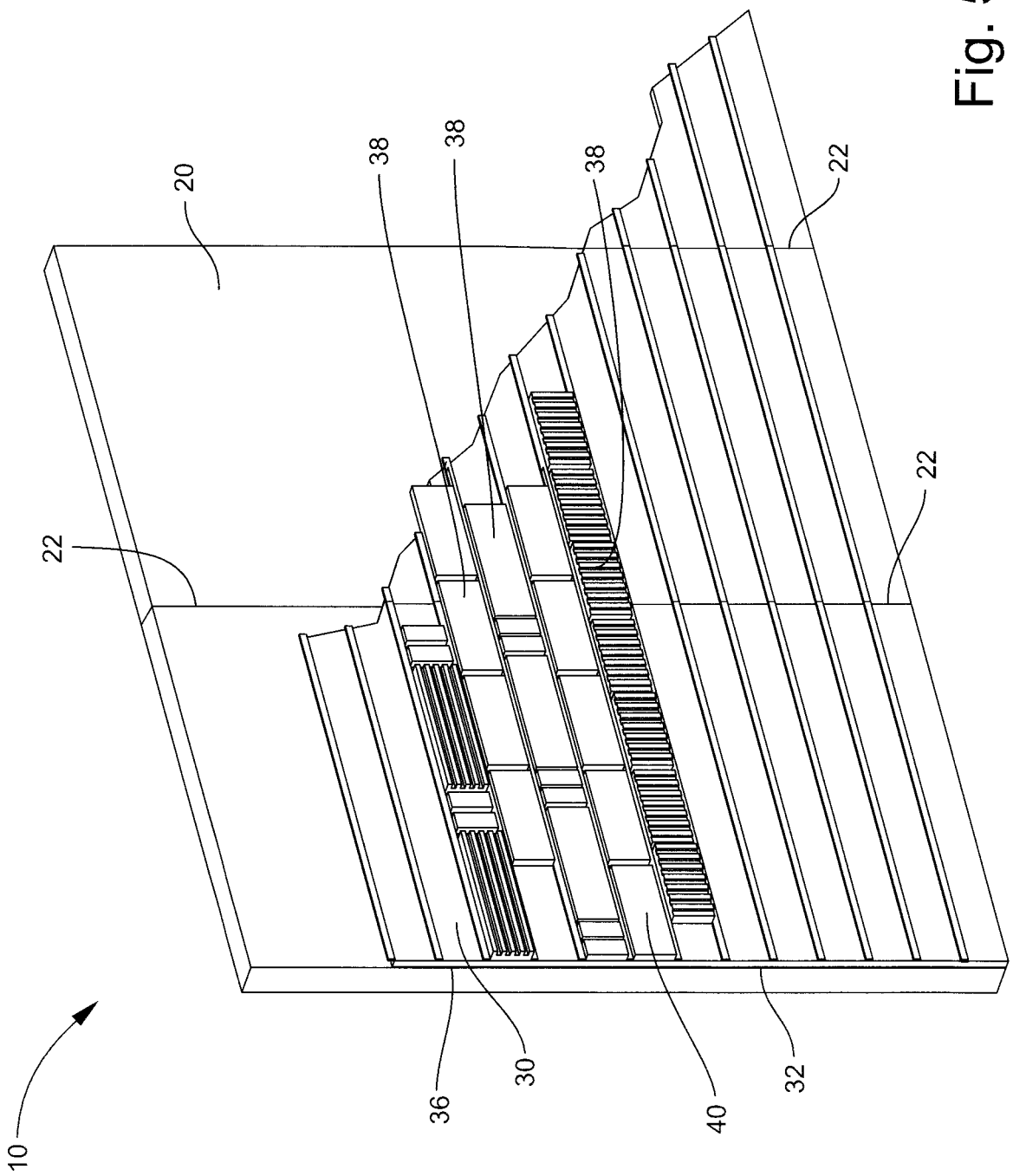

Fig. 5

INSULATED WALL PANEL

CROSS-REFERENCE TO RELATED PATENT APPLICATIONS

This application is a continuation of US patent application having application Ser. No. 15/907,503 filed on Feb. 28, 2018, which itself is a continuation of US patent application having application Ser. No. 15/138,638 filed on Apr. 26, 2016, which itself is a continuation of US patent application having application Ser. No. 14/039,101 filed on Sep. 27, 2013, which itself is a nonprovisional application tracing priority to US provisional patent application having application No. 61/706,148 filed on Sep. 27, 2012. This application claims the full benefit of, traces priority to, and expressly incorporates by reference the entirety of all of the Ser. No. 15/907,503 application, the Ser. No. 15/138,638 application, the Ser. No. 14/039,101 application, and the 61/706,148 application.

TECHNICAL FIELD AND BACKGROUND OF INVENTION

The invention relates to the field of building construction materials. More particularly, the invention relates to the field of construction components used in the construction of walls and other planar surfaces for buildings.

Humans have utilized bricks and other hard surfaces as construction components for buildings for thousands of years. The earliest sun dried bricks were made in Ancient Egypt. Later, bricks were dried using a fuel source. The Book of Genesis records that burnt brick was used in the construction of the Tower of Babel. Thus, from ancient times to the present, brick has remained a popular building material.

The enduring presence of brick is due in no small part to its stellar properties as an exterior surface. Bricks are capable of resisting high summer heat as well as cold winters and changes there between. In addition to such thermal properties, brick provides a strong outer shell to a building. Brick resists wind, rain, snow, dust and other detrimental environmental elements. Bricks can be manufactured in a myriad of sizes, textures, and colors. Further, though it need not be painted, when brick is painted, the paint adheres well to the brick.

However, despite such positive characteristics, brick has a few drawbacks, mostly related to installation. For instance, whereas other exterior surfaces may be relatively easily applied to an existing building structure, brick is much more difficult to install on an existing building as an alternate siding choice during a renovation. Further, the laying of brick during the construction of a building is a labor intensive operation. Each brick must be mortared and laid, one on another, brick by brick, by a skilled brick mason. As manual labor prices rise in a given market, so do the costs associated with using brick as a building material.

Thus, there exists a need for a building product that has the same or better building characteristics and aesthetic appeal as traditional brick but also can be applied without the need for an extensive skilled labor team of brick masons. Further, there exists a need for a building product that has the same or better building characteristics and aesthetic appeal as traditional brick that may be used as a retro-fit product for providing a siding to an existing building structure. Further, as energy costs and environmental consciousness increase, so too does the demand for better insulation. Thus, there is also a need for building materials offering improved insulation of a building's envelope.

SUMMARY OF THE INVENTION

In one aspect, the invention includes a method of manufacturing a wall panel. The method includes: forming a glass-fiber reinforced cementitious layer which includes the steps of: i) pouring or injecting a slurry of uncured cementitious product into a mold, ii) embedding glass fiber reinforcing material therein, and iii) curing the cementitious product to obtain a cured cementitious product having a first side and a second side; and applying, to the second side of the cured cementitious product, an insulation layer, the insulation layer comprising a foam.

In some embodiments, the glass-fiber reinforcing material is configured to be the principal load carrying member of the wall panel.

In some embodiments, the method further includes applying a veneer layer to the first side of the cured cementitious product. In some embodiments, the veneer layer is clay brick, ceramic tile, porcelain tile, natural stone, engineered stone, or paint. In some embodiments, the veneer layer functions as a water-resistive barrier.

In some embodiments, the insulation layer has a uniform thickness and an insulation factor greater than or equal to R7 and less than or equal to R21.

In another aspect, the invention includes a method of forming a wall panel system for a building structure. The method includes: a) providing a plurality of wall panels, each of the plurality of wall panels comprising: a middle layer having a first side and a second side, the middle layer comprising: cementitious product and glass fiber reinforcing material embedded therein; and a foam layer on the second side of the middle layer; b) securing each of the plurality of wall panels to a structural element; wherein seams between the respective wall panels are sealed.

In some embodiments, the seams are sealed with a sealing compound.

In some embodiments, each of the plurality of wall panels further comprises a veneer layer attached to the first side of the middle layer. In some embodiments, the veneer layer is clay brick, ceramic tile, porcelain tile, natural stone, engineered stone, or paint. In some embodiments the veneer layer functions as a water-resistive barrier.

In some embodiments, the method of forming a wall panel system further includes, after step b), step c) applying a veneer layer to the first side of the middle layer. In some embodiments, the veneer layer is clay brick, ceramic tile, porcelain tile, natural stone, engineered stone, or paint. In some embodiments the veneer layer functions as a water-resistive barrier.

In some embodiments, the glass-fiber reinforcing material is configured to be the principal load carrying member of the wall panel.

In some embodiments, the insulation layer has a uniform thickness and an insulation factor greater than or equal to R7 and less than or equal to R21.

In another aspect, the present invention includes a wall panel. The wall panel includes a middle layer having a first side and a second side, the middle layer comprising a cementitious product and a glass fiber reinforcing material; and a foam layer attached to the second side of the middle layer.

In some embodiments, the wall panel further comprises a veneer layer on the first side of the middle layer. In some embodiments the veneer layer is clay brick, ceramic tile,

porcelain tile, natural stone, engineered stone, or paint. In some embodiments the veneer layer functions as a water-resistive barrier.

In some embodiments, the middle layer is a poured, injected, press-molded, extruded, vibration cast, sprayed, or slip formed layer.

BRIEF DESCRIPTION OF THE DRAWINGS

Features, aspects, and advantages of a preferred embodiment of the invention are better understood when the detailed description is read with reference to the accompanying drawing, in which:

FIG. **1** is an exploded perspective view of an embodiment of the invention showing the layers;

FIG. **2** is a partial perspective view of an embodiment of the invention showing two adjacent panels and highlighting the attachment of the panels to a wall;

FIG. **3** is a perspective view of an embodiment of the invention showing one panel without the outer veneer layer attached;

FIG. **4** is perspective view of an embodiment of the invention showing two adjacent panels with the outer veneer layer partially attached and covering the joint between the two adjacent panels; and

FIG. **5** is a perspective view of an embodiment of the invention showing adjacent panels with the outer veneer layer partially attached and covering the joint between two adjacent panels.

DETAILED DESCRIPTION

It is to be understood by a person having ordinary skill in the art that the present discussion is a description of exemplary embodiments only and is not intended as limiting the broader aspects of the present invention. The following example is provided to further illustrate the invention and is not to be construed to unduly limit the scope of the invention.

Referring to FIGS. **1-5**, the invention is an insulated wall panel **10** having three layers, **20**, **30**, and **40**. The panel **10** provides a finished aesthetic surface to a building, a structural component to a building, and an insulation factor for a building. As such, the installed wall panel **10** includes an inner insulation layer **20**, a middle cement layer **30**, and an outer veneer layer **40**. The panel **10** may be attached to a building wall **50**.

The outer veneer layer **40** may include brick (as shown in the drawings) but may also include stone, tile, engineered stone, and/or similar material depending on desired finish effect. Thus, the use of the term "brick" herein is synonymous and inclusive of other veneers thus listed. The veneer layer **40** is relatively thin and is attached to the middle cement layer **30** using mortar **44** or other appropriate material such as a chemical adhesive as best shown in FIG. **4**. Each brick (or other material as desired) of the veneer layer **40** is thin and is defined by a perimeter.

The middle layer **30** provides a substrate to which the brick of the veneer **40** is applied upon installation on a building structure **50**. The middle layer **30** has a plurality of sets of relief lines **32**. Each set of relief lines **32** define a boundary that is just larger than the perimeter of a particular brick of the veneer layer **40** that is to be applied to the middle layer **30**. The relief lines **32** may be formed to the thickness of the desired grout **42** spacing between the brick of the veneer layer **40**.

The middle layer **30** is made of a cementatious product with a glass fiber reinforcing material embedded therein. The glass fiber has a high strength and is the principal load-carrying member of the middle layer **30** while the cement forms a matrix that allows the fibers to retain their desired location and orientation. The resultant product is thin and strong.

In order to form the middle layer **30**, a mold is first constructed into which a slurry of uncured cementatious product of the middle layer **30** is poured. The mold will have the negatives of the relief lines **32** formed therein. These negatives will appear as small trenches within the mold such that when the cement cures and the middle layer **30** is removed from the mold, the relief lines **32** will protrude outward from the otherwise generally planar outer surface **34** of the middle layer. The inner surface **36** of the middle layer **30** will also be generally planar but will not have such relief lines **32**. The middle layer **30** may remain in the mold while curing. Curing time is dependent upon the thickness, particulars of the mix design, and the environment in which the cement is being cured. Preferably, the middle cement layer **30** is cured in a chamber.

Once cured, the middle layer **30** is then placed in a fixture that allows the inner insulation layer **20** to be applied and attached to the inner surface **36** of the middle layer **30**. The inner insulation layer **20** is a rigid pour foam that is formed from a two part Class I rated urethane. The foam is non-CFC and non-HCFC. The foam is applied to the inner surface **36** of the middle layer **30** using a machine calibrated to deliver proper and consistent component mix. The finished urethane material **20** will have an in place density of approximately 2.2 pounds per cubic foot. The foam **20** adheres to the middle layer **30** such that the machine delivery and mixing of the components provides for a complete bond between the middle layer **30** and inner insulation layer **20**. Thus, there are no adhesives or other chemical bonding required to achieve the strength of the final insulated panel **10**. The inner insulation layer **20** may be one inch thick or up to three inches thick or greater depending on the level of insulation desired for a particular application.

Alternatively, rather than being poured, the middle layer **30** may be press-molded, extruded, vibration cast, sprayed, or slip formed. If, in alternate embodiments, attachment points **54** or other items are incorporated into the structure they are placed in the mold prior to the injection of the urethane.

Once the cement and urethane foam of the respective middle **30** and inner **20** layers has cured, the panel **10** is in condition for application to a building **50**. As shown in FIG. **2**, the panels **10** are screwed with screws **52** to the wall **50** or other structural element of a building. End pieces, headers, and other trim pieces, having been similarly manufactured, are likewise attached to the building. The seams **22** between the respective panels and trim pieces are sealed with a sealing compound, such as Laticrete® Air and Water Barrier. Next, as shown in FIG. **4**, an adhesive such as mortar **44** is applied to the outer surface of the middle layer **30**. Next, the brick of the veneer layer **40** are applied on top of the adhesive **44** and between the relief lines **32**. The brick of the veneer **40** are applied to overlap **38** the seams **22** in the panels **10**. This overlapping **38** of the seams is best shown in FIGS. **4** and **5**. Finally, a grout **42** or other material is applied between the gaps in the brick of the veneer **40**.

We claim:

1. A method of manufacturing a wall panel, the method comprising:

forming a glass-fiber reinforced cementitious layer including the steps of:

i) pouring or injecting a slurry of uncured cementitious product into a mold,

ii) embedding glass fiber reinforcing material therein, and

iii) curing the cementitious product to obtain a cured cementitious product having a first side and a second side; and

applying, to the second side of the cured cementitious product, an insulation layer, the insulation layer comprising a foam, wherein the insulation layer is chemically bound to the second side of the cured cementitious product without the use of an adhesive.

2. The method according to claim **1**, wherein the glass fiber reinforcing material is configured to be the principal load carrying member of wall panel.

3. The method according to claim **1**, further comprising applying a veneer layer to the first side of the cured cementitious product.

4. The method according to claim **3** wherein the veneer layer is clay brick, ceramic tile, porcelain tile, natural stone, engineered stone, or paint.

5. The method according to claim **3** wherein the veneer layer functions as a water-resistive barrier.

6. The method according to claim **1**, wherein the insulation layer has a uniform thickness and an insulation factor greater than or equal to R7 and less than or equal to R21.

7. A method of forming a wall panel system for a building structure, the method comprising:

a) providing a plurality of wall panels, each of the plurality of wall panels comprising:

a middle layer having a first side and a second side, the middle layer comprising:

cementitious product and glass fiber reinforcing material embedded therein; and

a foam layer chemically bound to the second side of the middle layer without the use of an adhesive;

b) securing each of the plurality of wall panels to a structural element;

wherein seams between the respective wall panels are sealed.

8. The method according to claim **7**, wherein the seams are sealed with a sealing compound.

9. The method according to claim **7**, wherein each of the plurality of wall panels further comprises a veneer layer attached to the first side of the middle layer.

10. The method according to claim **9**, wherein the veneer layer is clay brick, ceramic tile, porcelain tile, natural stone, engineered stone, or paint.

11. The method according to claim **9**, wherein the veneer layer functions as a water resistive barrier.

12. The method according to claim **7**, further comprising, after step (b):

c) applying a veneer layer to the first side of the middle layer.

13. The method according to claim **12**, wherein the veneer layer is clay brick, ceramic tile, porcelain tile, natural stone, engineered stone, or paint.

14. The method according to claim **13**, wherein the veneer layer functions as a water resistive barrier.

15. The method according to claim **7**, wherein the glass fiber reinforcing material is configured to be the principal load carrying member of wall panel.

16. The method according to claim **7**, wherein the insulation layer has a uniform thickness and an insulation factor greater than or equal to R7 and less than or equal to R21.

17. A wall panel comprising:

a middle layer having a first side and a second side, the middle layer comprising a cementitious product and a glass fiber reinforcing material; and

a foam layer chemically bound to the second side of the middle layer without the use of an adhesive.

18. The wall panel of claim **17** further comprising a veneer layer on the first side of the middle layer.

19. The wall panel of claim **18**, wherein the veneer layer is clay brick, ceramic tile, porcelain tile, natural stone, engineered stone, or paint.

20. The wall panel of claim **18**, wherein the veneer layer functions as a water resistive barrier.

21. The wall panel of claim **17**, wherein the middle layer is a poured, injected, press-molded, extruded, vibration cast, sprayed, or slip formed layer.

* * * * *