US 20040040256A1

(19) United States

(12) Patent Application Publication

(10) Pub. No.: US 2004/0040256 A1

(43) Pub. Date: Mar. 4, 2004

Bui

(54) LIGHTWEIGHT MODULAR CEMENTITIOUS PANEL/TILE FOR USE IN CONSTRUCTION

(76) Inventor: **Thuan H. Bui**, Philadelphia, PA (US)

Correspondence Address:
ANTONELLI, TERRY, STOUT & KRAUS, LLP
1300 NORTH SEVENTEENTH STREET
SUITE 1800
ARLINGTON, VA 22209-9889 (US)

(21) Appl. No.: 10/230,091

(22) Filed: Aug. 29, 2002

Publication Classification

(51) Int. Cl.[7] E04C 2/32

(52) U.S. Cl. 52/782.1

(57) ABSTRACT

A lightweight cementitious panel/tile is provided with increased bending stiffness and less weight than conventional construction panels. The cementitious panel is constructed of a cementitious surface (which may be reinforced with wood fiber or other materials) supported by an integrated stiffener grid on the underside to absorb stresses and loads.

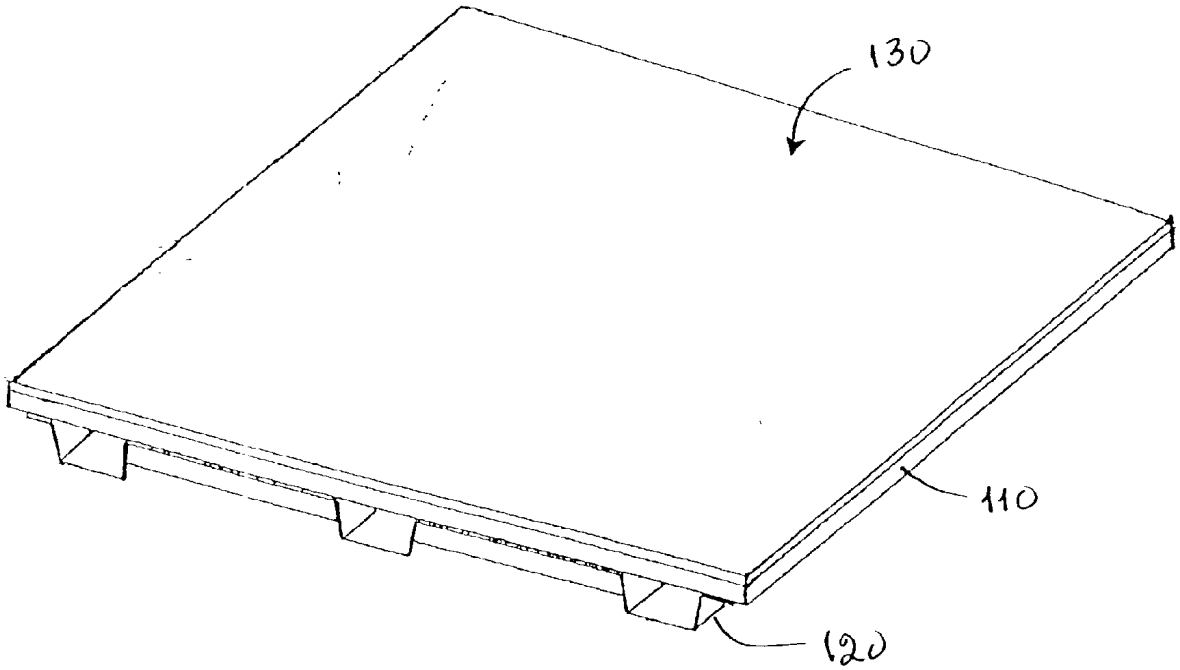

FIG. 1

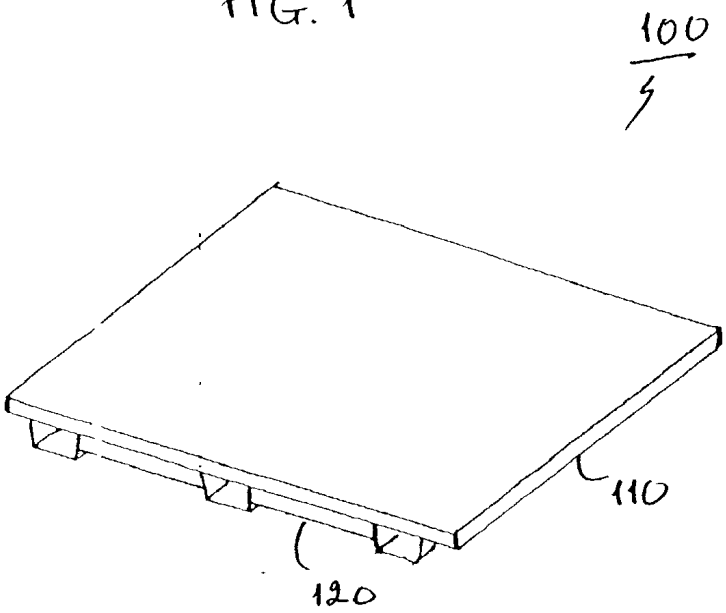

FIG. 2A

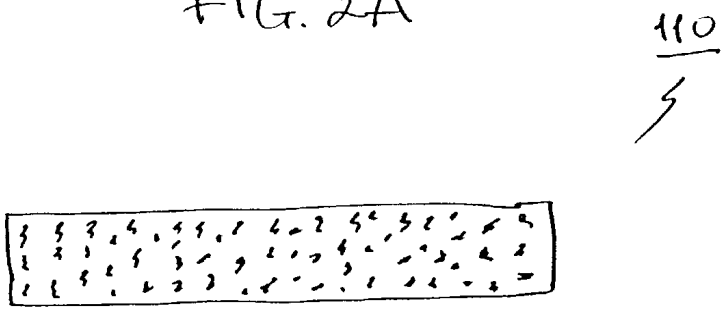

FIG. 2B

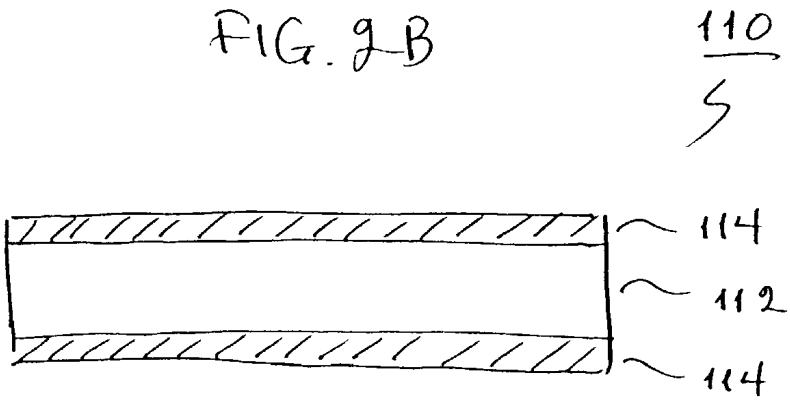

FIG. 3A

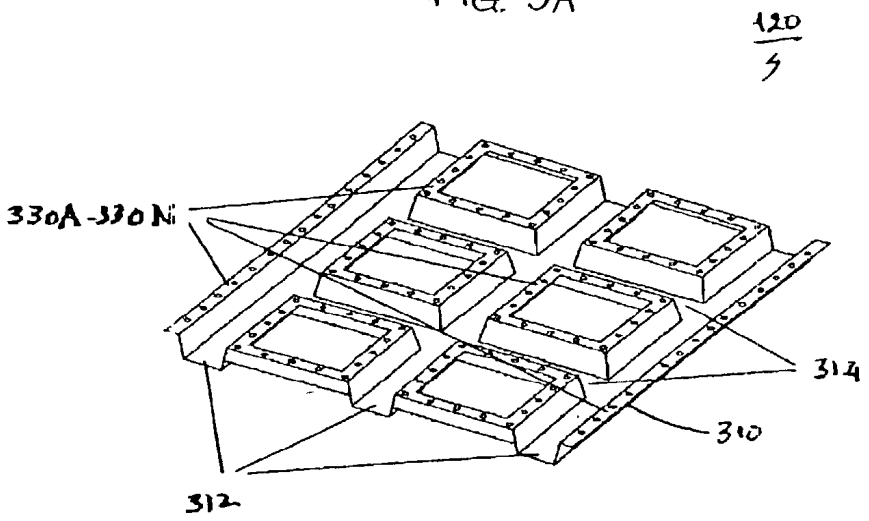

FIG. 3B

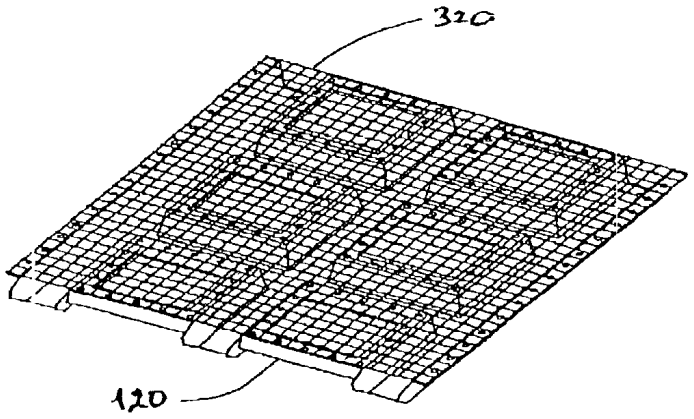

FIG. 4

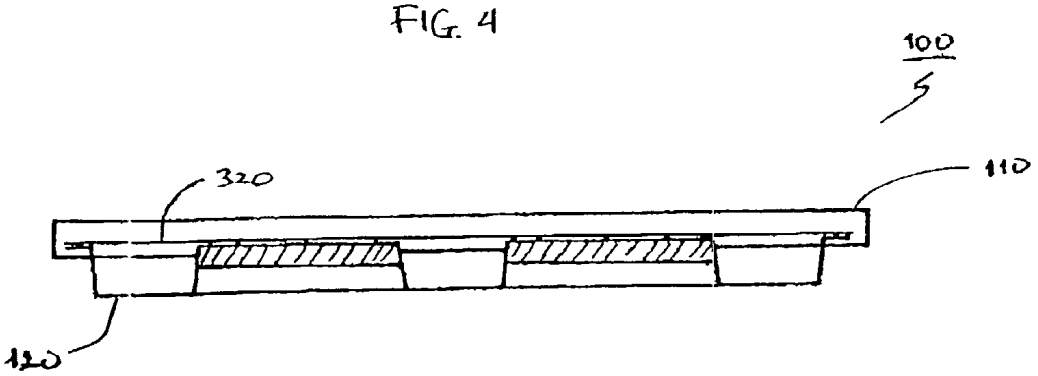

FIG. 5

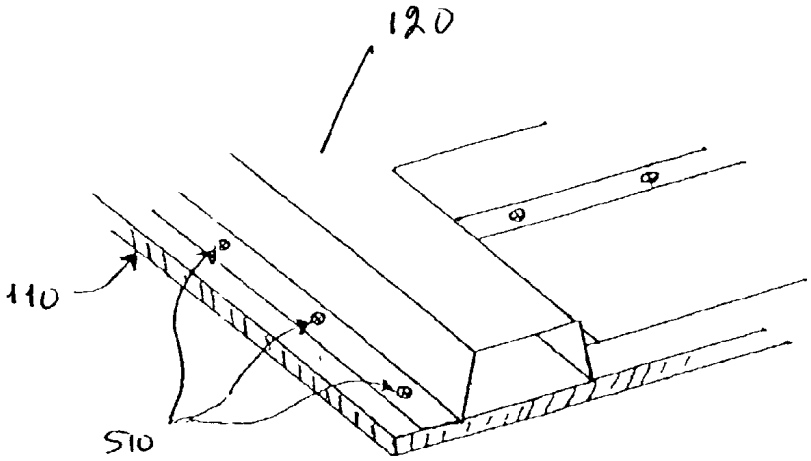

FIG. 6

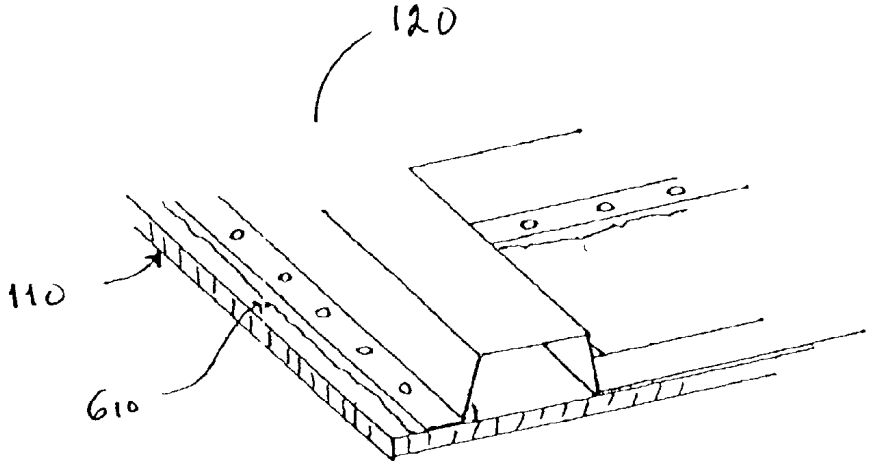

FIG. 7

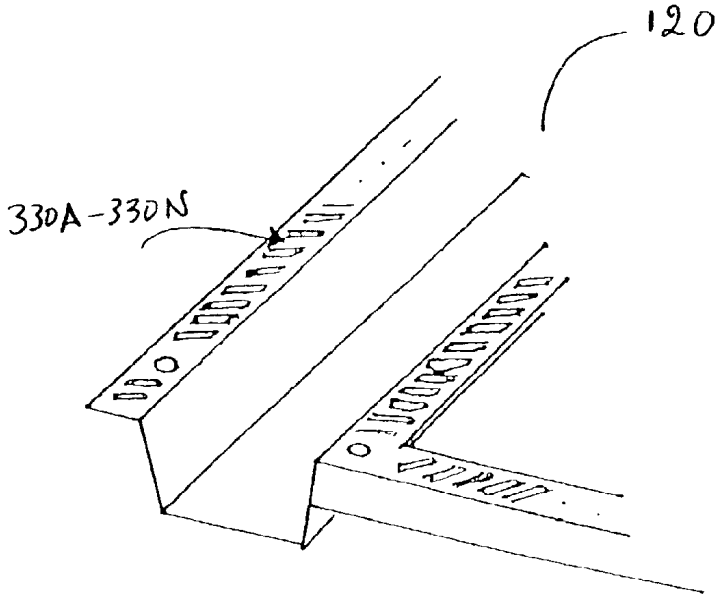

FIG. 8

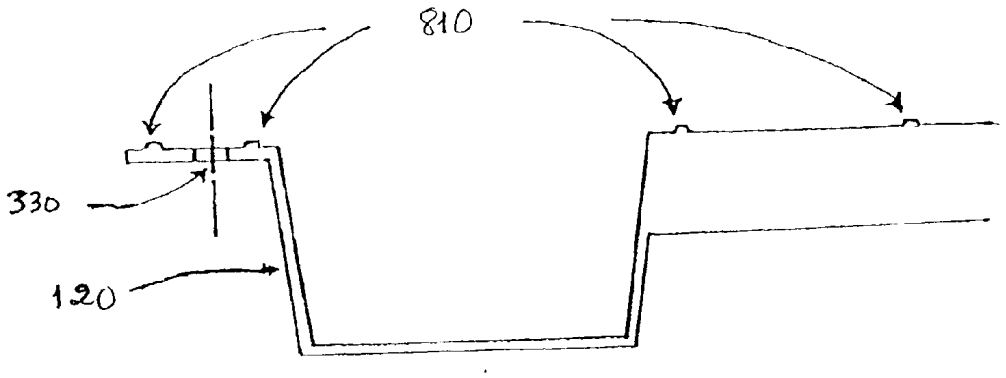

FIG. 9

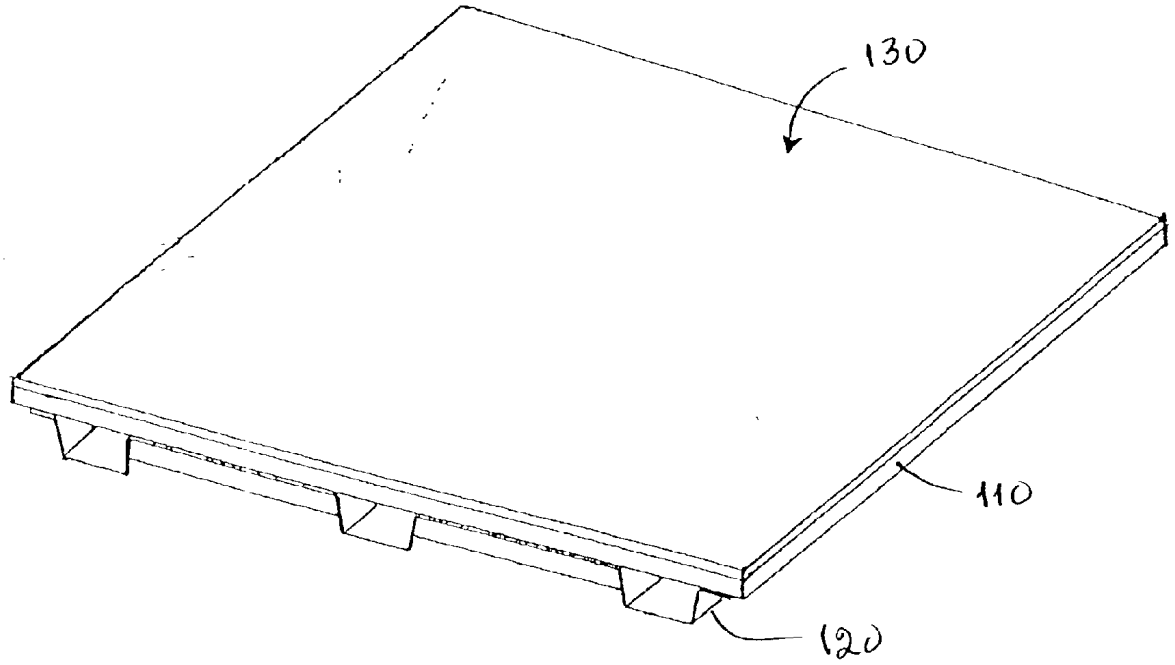

FIG. 10

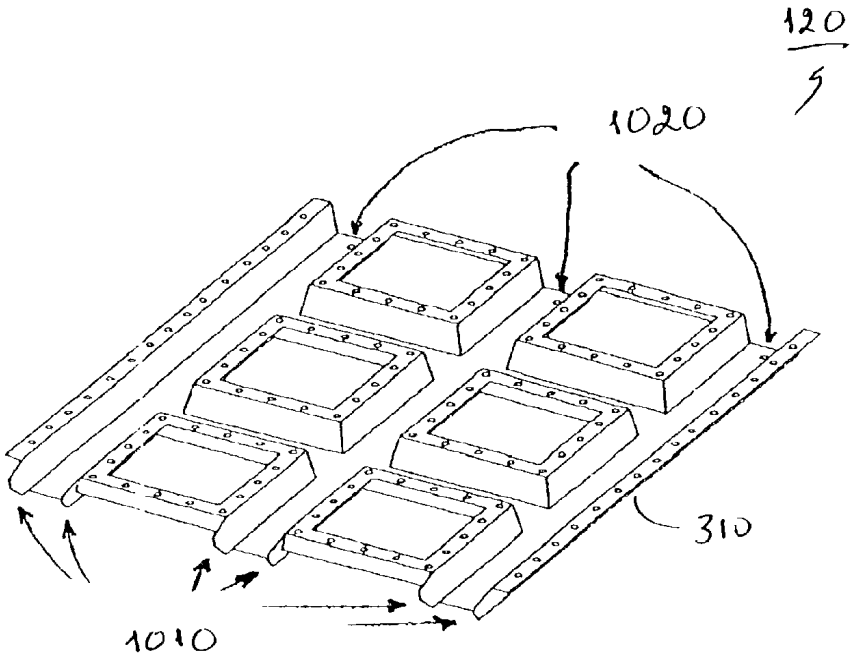

FIG. 11

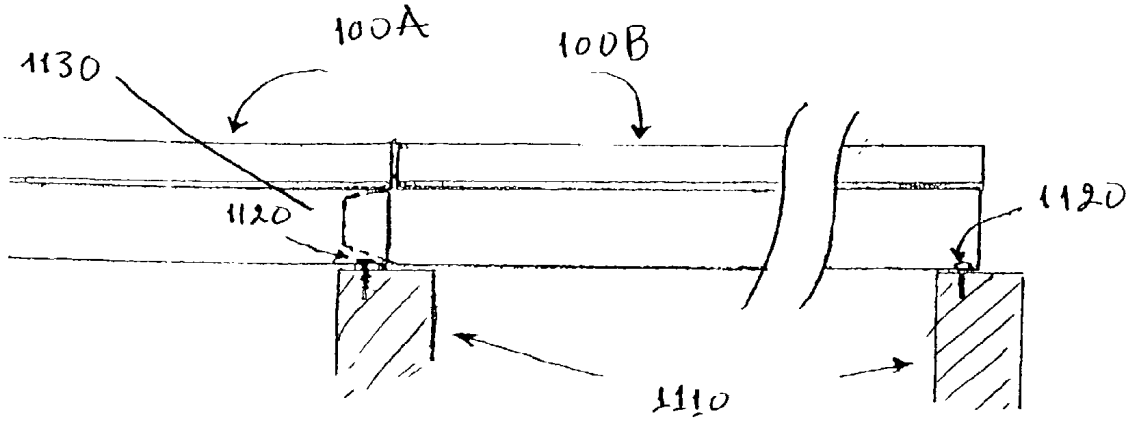

LIGHTWEIGHT MODULAR CEMENTITIOUS PANEL/TILE FOR USE IN CONSTRUCTION

FIELD

[0001] The present invention relates generally to structural building materials and, more specifically, relates to a lightweight structural element, in the shape of a panel/tile, especially for building construction in the area of exterior wall or facade, decking, flooring, and roofing, containing an integrated support structure, in the form of a stiffener grid, provided for total weight and thickness reduction, while achieving high bending stiffness, durability, and modularity.

BACKGROUND

[0002] Currently, there are several types of materials that are used in building construction. Most commonly used are stone, wood, bricks, concrete, metal, and plaster and other materials. Many construction materials are available individually for assembly at the construction site, such as stone, wood, bricks etc., while others are assembled from prefabricates in a production factory, and then transported to the construction site as subassemblies, mostly in the form of various panels.

[0003] Pre-fabricated panels, made of steel reinforced concrete, have been widely used in the large-scale construction of houses and buildings. Panels, with insulating and other surface layers, are used to build complete houses, including roofs, ceilings, floors and backer-boards for ceramic tiles, thin bricks, thin stones, synthetic or natural stucco used in kitchens, bathrooms, shower rooms, corridors or any places that require water resistance and impact resistance. For wall systems, a wall joist structure (columns) is constructed and pre-fabricated panels may be attached to the joists. For flooring or roofing, a joist structure of beams is assembled and the pre-fabricated panels may be attached to the joists. For decking applications, pre-fabricated cement panels may be provided with a support structure to reduce the number of beams required to support the decking. However, cement panels can be extremely heavy.

[0004] Many pre-fabricated panels also incorporate prestressed and rebar reinforced cement/concrete products to increase high tensile strength and high bending strength. For example, high performance composite materials such as reinforcing fibers may be added to the surface of cement-based products to increase bending stiffness as described by Jinno et al., U.S. Pat. No. 6,330,776 entitled "*Structure For Reinforcing Concrete Member And Reinforcing Method.*" Interior reinforcing metal strips or cross-bars can also be used to increase bending stiffness as disclosed, for example, by William H. Porter, U.S. Pat. No. 5,842,314, entitled "*Metal Reinforcement of Gypsum, Concrete or Cement Structural Insulated Panels*"; U.S. Pat. No. 6,269,608, entitled "*Structural Insulated Panels For Use With 2×Stick Construction*"; U.S. Pat. No. 6,408,594, entitled "*Reinforced Structural Insulated Panels With Plastic Impregnated Paper Facings*"; Meier et al., U.S. Pat. No. 5,937,606, entitled "*Securing Of Reinforcing Strips*"; and Billings et al., U.S. Pat. No. 6,230,409, entitled "*Molded Building Panel and Method Of Construction*".

[0005] While the bending stiffness can be increased by reinforcing metal strips or cross-bars embedded in prefabricated panels, the overall weight of the pre-fabricated panels with sufficient stiffness and high bending strength remains a challenge. This is because embedding structural frameworks (metal strips or cross-bars) into cement can result in a heavy, thick construction using more cement product than is required. As a result, many panels still require a relatively thick plate for high load bearing applications. Moreover, materials used for prefabricated panels have been less than satisfactory in many respects, including their relatively high cost, heavy weight, structural deficiencies, and lack of resistance to elements.

[0006] Therefore, a need exists for a new structural building element, a lightweight pre-fabricated panel/tile provided with high stiffness, high bending strength without increasing overall weight for construction applications such as flooring, roofing, decking, bridge surface, and wall systems.

SUMMARY OF THE INVENTION

[0007] Accordingly, it is therefore an object of the invention to provide a lightweight modular cementitious panel/tile designed for total weight and thickness reduction, while achieving high bending stiffness, durability, and modularity.

[0008] In accordance with one aspect of the present invention, a cementitious panel is provided with a plate made of a cementitious material; and a stiffener grid provided at an underside of the plate to transfer the stresses and loads placed on the plate to the underside grid.

[0009] The cementitious plate is made of fiber-reinforced cement, concrete or gypsum. Alternatively, the cementitious plate may be formed of a generally flat gypsum core sandwiched between layers of fiber-reinforced cement, concrete or gypsum. The stiffener grid is made of a metal sheet of galvanized steel (or of any type of appropriate corrosion resistant, stiff structural material) stamped or formed into a single piece in a hat-section shape having multiple stiffeners disposed on the cementitious plate to enhance stiffness and bending strength of the cementitious panel. The stiffener grid may have various dimensions, in terms of wall thickness, height, and patterning, depending on specifications and particular application. Such a stiffener grid may be joined to the cementitious plate by embedding an upper surface (flange) of the stiffener grid into a cementitious material forming the cementitious plate, when the cementitious material is cast into a panel form for curing. Alternatively, the stiffener grid may be joined to the cementitious plate, via fasteners or adhesives. Perforations may be required on the flange of the stiffener grid to enhance bonding between the stiffener grid and the plate, when the stiffener grid is joined through curing of a cementitious material forming the plate. Optionally, an additional sheet of expanded metal mesh may be spot welded or otherwise attached to the flange of the stiffener grid to enhance the bonding between the stiffener grid and the cementitious material forming the plate.

[0010] In accordance with another aspect of the present invention, a cementitious panel is provided with a plate made of a cementitious material; a stiffener system formed at an underside of the plate to increase bending stiffness to the panel and to provide a mechanism for attaching the panel to a building structure; and a top finishing layer applied to the cementitious material to provide both decorative and durability properties; wherein the cementitious material, the stiffener system and the top finishing layer are integrated with each other to create a single piece, used for modular construction.

[0011] The present invention is more specifically described in the following paragraphs by reference to the drawings attached herein below only by way of example.

BRIEF DESCRIPTION OF THE DRAWING(S)

[0012] A better understanding of the present invention will become apparent from the following detailed description of example embodiments and the claims when read in connection with the accompanying drawings, all forming a part of the disclosure of this invention. While the following written and illustrated disclosure focuses on disclosing example embodiments of the invention, it should be clearly understood that the same is by way of illustration and example only and that the invention is not limited thereto. The spirit and scope of the present invention are limited only by the terms of the appended claims. The following represents brief descriptions of the drawings, wherein:

[0013] **FIG. 1** illustrates an example modular cementitious panel/tile according to an embodiment of the present invention;

[0014] FIGS. **2A-2B** illustrate an example cementitious plate according to various embodiments of the present invention;

[0015] **FIG. 3A** illustrates an example stiffener system according to an embodiment of the present invention;

[0016] **FIG. 3B** illustrates an example stiffener grid with a sheet of expanded metal mesh attached onto the flange of the stiffener grid, forming a single piece according to another embodiment of the present of the invention;

[0017] **FIG. 4** illustrates a side view of an example modular cementitious panel including a cementitious plate and a stiffener grid according to an embodiment of the present invention;

[0018] **FIG. 5** illustrates an example method of joining the stiffener grid to the cementitious plate using fasteners according to an embodiment of the present invention;

[0019] **FIG. 6** illustrates an example method of joining the stiffener grid to the cementitious plate using adhesives according to another embodiment of the present invention;

[0020] **FIG. 7** illustrates an example stiffener grid in which perforations are used to enhance bonding with the cementitious plate according to an embodiment of the present invention;

[0021] **FIG. 8** illustrates an example stiffener grid in which elevated elements are used to enhance bonding with the cementitious plate according to another embodiment of the present invention;

[0022] **FIG. 9** illustrates an example modular cementitious panel including a cementitious plate, a stiffener grid and a final coating of a decorative material assembled according to an embodiment of the present invention;

[0023] **FIG. 10** illustrates an example stiffener grid for easy assembly according to an embodiment of the present invention; and

[0024] **FIG. 11** illustrates an example assembly of modular cementitious panels according to an embodiment of the present invention.

DETAILED DESCRIPTION

[0025] Example embodiments of the present invention are applicable for use with all types of support structures provided at the underside (bottom) of a cementitious plate to absorb high values of stress, from bending as well as from torsion loads, in horizontal and vertical directions, as well as all types of cementitious materials, including, but not limited to, fiber-reinforced cement, non-reinforced cement, concrete, cement reinforced with various other materials, cements made from fly ash, slag or sludge. However, for the sake of simplicity, discussions will concentrate mainly on modular cementitious panels or tiles having a cementitious plate and an integrated stiffener grid designed to absorb and transfer stresses and loads placed on the cementitious plate, although the scope of the present invention is not limited thereto. Such a cementitious panel/tile may be designed for use as a backer board for tile, thin brick, thin stones, synthetic or natural stucco, paint, exterior insulation and finish systems or other finishes that can be applied to concrete. Such cementitious panels/titles may also be available in a wide variety of dimensions (sizes/scales) and can have many applications, such as exterior decking, bridge decking, flooring, exterior or interior wall panels and facades, roofing, or other traditional and novel building applications. The term "cementitious" as used herein is to be understood as referring to any material, substance or composition containing or derived from cement or other pozzalonic materials.

[0026] Attention now is directed to the drawings and particularly to **FIG. 1**, in which an example modular cementitious panel or tile for use in construction according to an embodiment of the present invention is illustrated. As shown in **FIG. 1**, the cementitious panel **100** comprises two primary elements: a cementitious plate **110** and a stiffening system **120** integrated with the cementitious plate **110** to create a single piece, which can be used for modular building or construction. The stiffening system **120** may be incorporated at an underside (bottom) of the cementitious plate **110** to provide high bending stiffness to the cementitious panel **100**, and to provide a mechanism for joining or attaching these panels to the building structure. More specifically, the stiffening system **120** is designed to absorb and transfer high values of stress, from bending as well as from torsion loads, in both horizontal and vertical directions, placed on the cementitious plate **110** so that the cementitious plate **110** needs not be thick or heavy to withstand the stress load. As a result, the overall weight and thickness of the cementitious panel **100** can be significantly reduced, while the stiffness and bending strength can be optimized considerably.

[0027] FIGS. **2A-2B** illustrate an example cementitious plate **110** made according to various embodiments of the present invention. As shown in **FIG. 2A**, the cementitious plate **110** may be formed of a cementitious material made of fiber-reinforced cement to provide the cementitious panel **100** with high tensile strength. The cementitious material may also be a formulation of cement, gypsum, perlite and suitable catalysts. The gypsum is preferably a high density gypsum composition that is commercially available in the market. The perlite may be in the form of an expanded perlite aggregate in plaster and concrete.

[0028] Alternatively, the cementitious plate **110** may be formed of a generally flat gypsum core **112** sandwiched

between layers of fiber-reinforced cement **114**, as shown in **FIG. 2B**. In many applications, one layer of fiber-reinforced cement positioned on one side of the cementitious plate **110** may be sufficient. In both embodiments shown in FIGS. **2A-2B**, the cementitious plate **110** may have various dimensions, in terms of sizes and wall thickness, depending on the specifications and particular application.

[**0029**] In a preferred embodiment of the present invention, the cementitious material used may be smooth, or may have texture applied to thereto. Such a cementitious material may also be made from concrete, fly ash, or other durable exterior casting material. Wood fibers may then be used to reinforce the cement, concrete or gypsum because of their relatively low cost, lightweight, recyclable, and good thermal properties. However, other reinforcing fibers may also be available, such as carbon fibers, aramid fibers, glass fibers, polypropylene and the like. All reinforcing fibers or filaments may be disposed in the cement or gypsum in an organized or random fashion. In addition, other materials can also be used, including, for example, non-reinforced cement, concrete, cement reinforced with various other materials, cements made from fly ash, slag or sludge.

[**0030**] **FIG. 3A** illustrates an example stiffener system according to an embodiment of the present invention. As shown in **FIG. 3**A, the stiffening system may be a stiffener grid **120** made from a single piece of metal which can be stamped to shape by machine and then applied to the underside (bottom) of the cementitious plate **110**. In a preferred embodiment of the present invention, the stiffener grid **120** may be formed from a galvanized steel sheet **310** stamped into a single piece of substantially the same size as that of the cementitious plate **110**. The galvanized steel sheet **310** may contain three stamped channels **312** running in one direction and two stamped channels **314** running in the other direction, all in a hat-section configuration.

[**0031**] However, the stiffener system needs not be a stiffener grid **120** shown in **FIG. 3A**. Other forms of stiffener mechanisms and hollow support structures may be utilized as long as the cementitious plate **100** is provided with high bending strength without increasing plate weight and thickness. The stiffener grid **120** may also be formed from any sheet of metal such as stainless steel, steel, and aluminum, or other corrosion resistant materials used to enhance the bending stiffness and reduce the weight of the cementitious panel **100**, while providing a mechanism for joining or attaching these panels or tiles to the building structure. In addition, the stiffener grid **120** need not be arranged in the 3×2 stiffener configuration. Rather, any number of stamped stiffeners may be acceptable when designed to end-use. Likewise, the stiffener grid **120** need not use the hat-section configuration as shown in **FIG. 3A**. Rather, any other stiffener configurations or shapes, such as blade stiffeners, J-sections, H-sections, etc. may be used when designed to final application. The stiffener grid **120** can also have various dimensions in terms of wall thickness, height of stiffener, and patterning, depending on the specifications and particular application.

[**0032**] **FIG. 3B** illustrates an example stiffener grid according to another embodiment of the present invention. The stiffener grid configuration, as shown in **FIG. 3**B, has an additional expanded metal mesh **320** spot welded or otherwise attached to its flange. Such an expanded metal mesh **320** is advantageously designed for the cement embedding process, wherein, during the manufacturing process, the cementitious plate **110** may be cast with the stiffener grid in place. The expanded metal mesh **320** is also designed to help the attachment of the stiffener grid **120** into the cementitious plate **110**, and reinforce the cementitious plate **110**.

[**0033**] The expanded metal mesh **320** may be sheet metal such as lightweight aluminum (Al) that has been slit and stretched in different sizes, shapes and patterns such as square, cane, oval, diamond, triple diamond and interweave. Sheets may be lightweight, yet strong due to the truss pattern which enhances the rigidity of the metal. These versatile sheets permit the stiffener grid **120** to bond with the cementitious plate **110** easily, and can be cut, formed and welded to suite any particular application.

[**0034**] **FIG. 4** illustrates a side view of an example modular cementitious panel **100** shown in **FIG. 1**. The stiffener grid **120** may be joined to the cementitious plate **110** by embedding the upper surface (flange) of the stiffener grid **120** into the cementitious material, when the cementitious material forming the cementitious plate **110** is cast into a panel or tile form, via a mould, and remains uncured. The cement will flow through the flange's perforations **330A-330N** and, optionally, the expanded metal sheet **320** as shown in **FIG. 3**B, and will cure in place. The cement may then be pressed with the stiffener grid **120** in place to increase inter-laminar bond strength. The cement product may have decorative or functional texture applied to upper surface, such as wood texture, or others.

[**0035**] Alternative methods for joining the stiffener grid **120** to the cementitious plate **110** may include the use of bumps instead of or in addition to perforations on the stiffener grid **120** while curing the cement. Other alternatives allow for forming the cement product independently and attaching the stiffener grid **120** through the use of adhesives or mechanical fastening means. Adhesive can be urethane or epoxy cement, glue or a mastic coating. Other mechanical fastening means can also be used, such as screws, nails, bolts, rivets, pins, loops and the like in the structure or the structural component, respectively, or the cement product.

[**0036**] For example, **FIG. 5** illustrates an example method of joining the stiffener grid **120** to the cementitious plate **110** using fasteners according to an embodiment of the present invention. As shown in **FIG. 5**, mechanical fasteners such as screws or nails **510** may be used to attach the stiffener grid **120** to the cementitious plate **110**. If mechanical fasteners are used, then the cementitious plate **110** may contain a surface edge reinforcement layer that is relatively strong and hard such that a screw or a nail may be driven through the edge of the cementitious plate **110** without pre-drilling and/or without breakage.

[**0037**] **FIG. 6** illustrates an example method of joining the stiffener grid **120** to the cementitious plate **110** using adhesives according to another embodiment of the present invention. As shown in **FIG. 6**, adhesives such as urethane or epoxy cement, glue or mastic coatings may be used to attach the stiffener grid **120** to the cementitious plate **110**. If adhesives are used, then the cementitious plate **110** may be pressed with the stiffener grid **120** in place until cured to increase inter-laminar bond strength.

[**0038**] **FIG. 7** illustrates an example stiffener grid **120** in which perforations **330A-330N** are used to enhance bonding with the cementitious plate **110** according to an embodiment of the present invention. As shown in **FIG. 7**, the edge of the stiffener grid **120** is perforated with openings (perforations). As a result, when the stiffener grid **120** is joined with the cementitious plate **110** through curing the cementitious

material, the inter-laminar bonding between the stiffener grid **120** and the cementitious plate **110** can be significantly improved.

[**0039**] **FIG. 8** illustrates an example stiffener grid **120** in which elevated elements such as bumps are used to enhance bonding with the cementitious plate according to another embodiment of the present invention. As shown in **FIG. 8**, elevated bumps **810** are positioned on the flange (upper surface) of the stiffener grid **120** in an organized or random fashion. These bumps **810** are used in addition to the perforations **330**A-**330**N on the flange of the stiffener grid **120** in order to ensure bonding with the cementitious plate **110**, particularly when the cement flows through the perforations **330**A-**330**N of the flange during curing.

[**0040**] **FIG. 9** illustrates an example modular cementitious panel **100** according to another embodiment of the present invention. As shown in **FIG. 9**, the modular cementitious panel **100** comprises three primary elements: a cementitious plate **110**, a stiffener grid **120** joined to the cementitious plate **110**, and a top finishing layerl**30** applied to the upper surface of the cementitious plate **110**. All three primary elements are integrated with each other to create a single piece, which can be used for modular building or construction, including interior flooring, exterior decking and wall system.

[**0041**] In a preferred embodiment of the present invention, the top finishing layer **130**, which can be applied to the cementitious material, is a simple spray coated polymer or another cementitous layer that is designed to address functions such as the decorative and durability properties of the panel/tile as a whole. For example, the top finishing layer **130** may be an epoxy-based cement layer pigmented for decorative reasons, with a thin coat of concrete sealer on top of the expoxy-based cement layer. The epoxy-based cement used here can provide extreme wear resistance; and the cement sealer can waterproof the epoxy-based cement layer.

[**0042**] The top finishing layer **130** can be adjusted and finished in a wide variety of ways, thus giving the final construction different features. Furthermore the material used can be extremely resistant to elements, fireproof, waterproof, and possibly even watertight. For instance, the cementitious plate **110** may be spray-coated with a waterproofing mixture and cured as required. The waterproofing coating can be obtained from the compositions including various groups of polymers. The polymers, which can be used for this purpose, include: poly(vinyl chloride) (PVC), polyurethane (PU), acrylic resins (AR), and other polymers which have waterproof properties. Additional examples include polymer-modified bitumens, alkyd resins, epoxy resins (EP), silicone resins which are not discussed but can also be used within the framework of the present invention.

[**0043**] For the convenience of assembly, the cementitious panel **100** may have various configurations that include means for attachment to other cementitious panels. For example, **FIG. 10** illustrates an example stiffener grid made for easy assembly according to an embodiment of the present invention. As shown in **FIG. 10**, the preferred attachment means to join cementitious panels together is a tongue and groove interlocking connection system. In one embodiment of the present invention, tougues **1010** may be formed in the channel members **340** at one side, for example, a left side of each cementitious panel **100**, while the grooves (not shown) may be formed in the channel members **340** at the other side, for example, a right side of each cementitious panel **100**. This way, when the cementitious panels are arranged in side-by-side arrangement, the tougue of one cementitous panel will project into the groove of the other cementitious panel to provide a tougue and groove interlocking connection.

[**0044**] The example stiffener grid **120** may also include selected openings **1020** in the channel members **340** at the other side, for example, the right side of the cementitious panel **100**. These openings **1020** are used to enable fasteners **1120** such as screws or nails to fasten or secure the cementitious panel (for example, **100**A) to the framing joist **1110** as shown in **FIG. 11**. When the cementitious panel **100**A is secured on the framing joist **1110**, the tougues **1010** extending from the channel members **340** of the stiffener grid **120** of another cementitious panel **100**B may be inserted into the grooves **1130** of the secured cementitious panel **100**A. After the tougue and groove interlocking connection is made, the fasteners **1120** may be used to secure the second cementitious panel **100**B onto another framing joist **1110**.

[**0045**] Other types of connections can also be used to interconnect the modular cementitious panels. For example, cooperating hinge barrels welded to the sides of the cementitious panels may be used, such that when panels are positioned in a side-by-side relationship, hinge barrels will be in alignment and a hinge pin can be inserted to lock panels together. The hinge barrel arrangement allows for rapid connection of panels, particularly when the panels are used for temporary or semi-temporary construction. If desired, waterproofing mastic or other such material, can be injected into any space remaining between the hingedly interconnected panels.

[**0046**] As discussed with reference to **FIGS. 1 and 9**, the fiber reinforced cement, or gypsum provides the cementitious panel **100** with high tensile strength, and the stiffener grid **120** provides the cementitious panel **100** with high bending strength without increasing panel weight and thickness. The example stiffener grid **120** shown in **FIG. 3** provides an increase in stiffness and bending strengths of the cementitious panel on the order of at least 2 or 3 times (200% or 300%) over the strength of non-stiffener reinforced panels.

[**0047**] In order to validate the overall concept of an integrated stiffener system, commercially available fiber-reinforced cement panels were tested in a flexural load condition using both a concentrated load (a 2" long, 0.25" diameter pin) and a distributed load (~10 in^2 circular plate). The stiffened cementitious panels were produced with the same fiber-reinforced cement panel as the plate material and also tested for the same properties. The stiffened cementitious panels were tested with the concentrated load between two (2) stiffeners and again with the concentrated load centered on one (1) stiffener.

[**0048**] The results of this test indicate dramatic increases in load to failure and bending stiffness of the stiffened panels. It should be noted that the stiffeners were not optimized in any way to provide specific performance goals, but rather assembled to validate the overall concept.

[**0049**] Table #1 shows the comparison of the concentrated pin load flex results on the different systems. In this table, the strength and stiffness values were normalized to the values of the cementitious panel, and the term "2 stiffeners" indicates that the concentrated load was located between two (2) stiffeners, and the term "1 stiffener" indicates that the concentrated load was centered on one (1) stiffener.

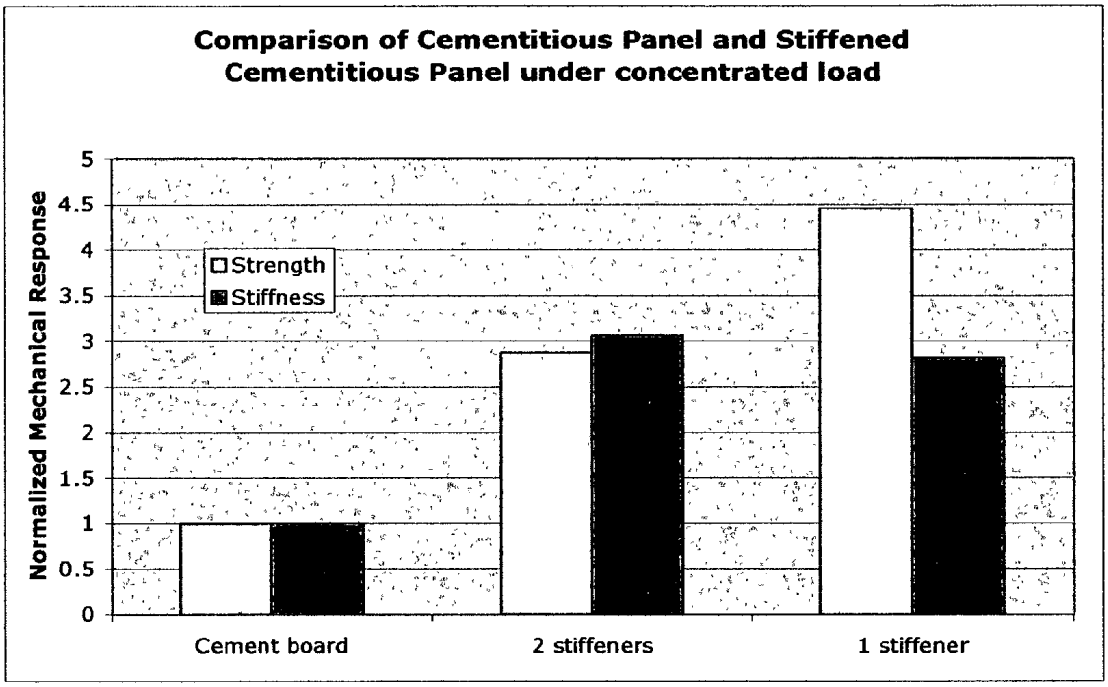
Comparison of Cementitious Panel and Stiffened Cementitious Panel under concentrated load
Normalized Mechanical Response
5
4.5
4
3.5
3
2.5
2
1.5
1
0.5
0
Strength
Stiffness
Cement board
2 stiffeners
1 stiffener

[0050] Table #1: Comparison of commercially available cementitious panel and stiffened cementitious panel according to an embodiment of the present invention under concentrated load.

[0051] Table #2 shows the comparison of distributed load flex results for the commercially available cementitious panel and the stiffened cementitious panel according to an embodiment of the present invention. In this case, the distributed surface was larger than the distance between the stiffeners, so it was not necessary to distinguish "2 stiffeners" from "1 stiffener".

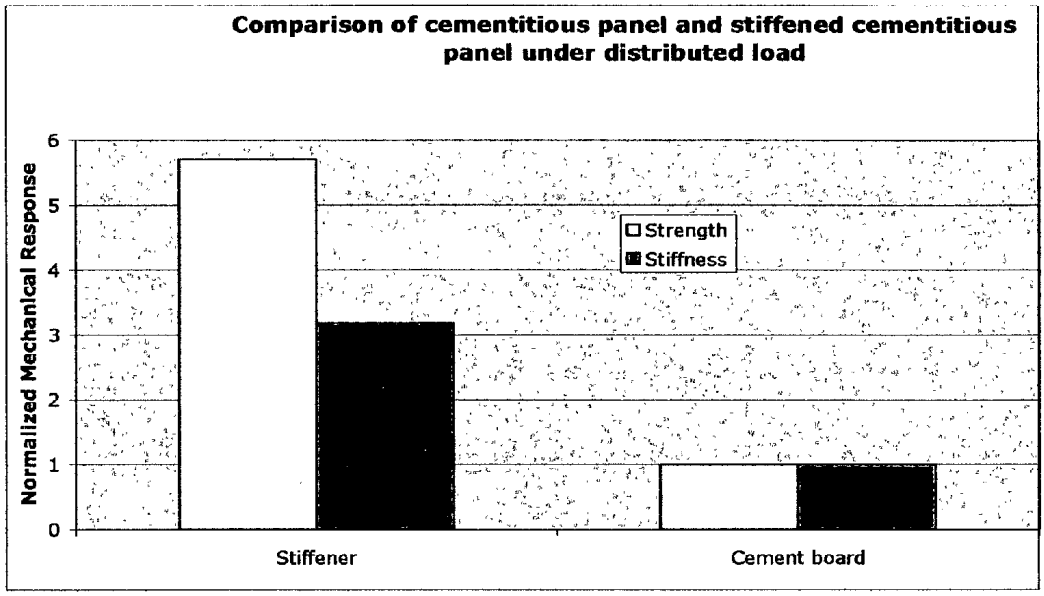
Comparison of cementitious panel and stiffened cementitious panel under distributed load
Normalized Mechanical Response
0
1
2
3
4
5
6
Strength
Stiffness
Stiffener
Cement board

[0052] Table #2: Comparison of commercially available cementitious panel and stiffened cementitious panel according to an embodiment of the present invention under distributed load.

[0053] The advantage of this lightweight stiffener solution lies in the high value of bending strength of the lightweight stiffener element caused by the fact, that the entire lightweight modular cementitious panel according to this invention behaves as a single entity, because the stiffener grid is firmly attached to the cementitious plate and therefore all internal and external stresses and loads are transferred from the cementitious plate to all the components of the stiffener grid. Thus it is possible to exploit this lightweight modular cementitious panel for walls as well as for floors, decking, wall, ceilings or roofs. In addition, the modular cementitious panels according to the present invention are light, inexpensive, durable, compact for storage, strong. Modular cementitious panels/tiles may also be provided with openings for electrical and other installations embedded therein.

[0054] As described from the foregoing, the present invention advantageously provides a method of constructing a lightweight cementitious panel/tile that has much greater bending stiffness and many times less weight than commercially available cementitious panel/tile. The design of such panels/tiles in various scales can have many applications, including exterior decking, bridge decking, flooring, exterior or interior wall panels, roofing, or other traditional and novel building applications. The essence of the construction is a cement surface (which may be reinforced with wood fiber or other materials) supported by an integrated stiffener grid on the underside to reduce the overall weight and thickness of the cement surface, while effectively withstanding stresses and loads asserted thereon.

[0055] While there have been illustrated and described what are considered to be example embodiments of the present invention, it will be understood by those skilled in the art and as technology develops that various changes and modifications may be made, and equivalents may be substituted for elements thereof without departing from the true scope of the present invention. Accordingly, all such modifications may be made to adapt the teachings of the present invention to a particular situation without departing from the scope thereof. Therefore, it is intended that the present invention not be limited to the various example embodiments disclosed, but that the present invention includes all embodiments falling within the scope of the appended claims. In the claims, means-plus-function clauses are intended to cover the structures described herein as performing the recited function and not only structural equivalents but also equivalent structures. Thus although a nail and a screw may not be structural equivalents in that a nail employs a cylindrical surface to secure wooden parts together, whereas a screw employs a helical surface, in the environment of fastening wooden parts, a nail and a screw may be equivalent structures.

What is claimed is:

1. A panel or tile comprising:

a cementitious plate; and

a stiffener grid provided at an underside of the cementitious plate to absorb or transfer the stresses and loads placed on the cementitious plate and to reduce the overall weight and thickness of the panel, while increasing stiffness and bending strengths of the panel.

2. The panel or tile as claimed in claim 1, wherein the cementitious plate is made of fiber-reinforced cement, concrete or gypsum.

3. The panel or tile as claimed in claim 1, wherein the cementitious plate is made of wood fibers mixed in a cementitious material.

4. The panel or tile as claimed in claim 1, wherein the cementitious plate is formed of a generally flat gypsum core sandwiched between layers of fiber-reinforced cement, concrete or gypsum.

5. The panel or tile as claimed in claim 1, wherein the stiffener grid is made of a metal sheet stamped into a single piece in a hat-section shape having multiple stiffeners disposed on the cementitious plate to enhance stiffness and bending strengths of the cementitious panel.

6. The panel or tile as claimed in claim 1, further comprising a finish surface or layer deposited on the cementitious plate to provide both decorative and durability properties.

7. The panel or tile as claimed in claim 1, wherein the stiffener grid has various dimensions, in terms of wall thickness, height, and patterning, depending on specifications and particular application.

8. The panel or tile as claimed in claim 1, wherein the stiffener grid with a sheet of expanded metal mesh spot welded or otherwise attached to the flange, is joined to the cementitious plate by embedding an upper surface of the stiffener grid into a cementitious material forming the cementitious plate, when the cementitious material is cast into a panel form for curing.

9. The panel or tile as claimed in claim 1, wherein the stiffener grid is joined to the cementitious plate, via fasteners.

10. The panel or tile as claimed in claim 1, wherein the stiffener grid is joined to the cementitious plate, via adhesives.

11. The panel or tile as claimed in claim 1, wherein the stiffener grid is made of a metal sheet stamped into a single piece in a hat-section shape having multiple stiffeners disposed on the cementitious plate to enhance stiffness and bending strengths of the cementitious panel, said stiffeners being separated by hollow channel members each of which includes attachment means to attach to another cementitious panel, via a tougue and groove interlocking connection.

12. The panel or tile as claimed in claim 11, wherein the stiffener grid contains perforations and a sheet of expanded metal mesh spot welded or otherwise attached to the flange is used to enhance bonding between the stiffener grid and the cementitious plate, when the stiffener grid is joined through curing of a cementitious material forming the cementitious plate, and strenghtening the cementitious plate

13. A construction panel or tile comprising:

a plate made of a cementitious material;

a stiffener system formed at an underside of the plate to increase bending stiffness to the panel and to provide a mechanism for attaching the panel to a building structure; and

a top finishing layer applied to the cementitious plate to provide both decorative and durability properties of the tile/panel surface;

wherein the cementitious plate, the stiffener system and the top finishing layer are integrated with each other to create a single piece, used for modular construction.

14. The construction panel or tile as claimed in claim 13, wherein the cementitious material is comprised of fiber-reinforced cement, concrete or gypsum.

15. The construction panel or tile as claimed in claim 13, wherein the plate can comprised of a generally flat gypsum core sandwiched between layers of fiber-reinforced cement, concrete or gypsum.

16. The construction panel or tile as claimed in claim 13, wherein the stiffener system is a stiffener grid made of a metal sheet stamped into a hat-section shape having multiple stiffeners disposed on the cementitious material to absorb stresses and loads placed on the plate.

17. The construction panel or tile as claimed in claim 16, wherein the stiffener grid has various dimensions, in terms of wall thickness, height, and patterning, depending on specifications and particular application.

18. The construction panel or tile as claimed in claim 16, wherein the stiffener grid is joined to the plate by embedding the upper surface of the stiffener system into the cementitious material, when the cementitious material is cast into a panel form for curing.

19. The construction panel or tile as claimed in claim 16, wherein the stiffener grid is joined to the plate, via fasteners.

20. The construction panel or tile as claimed in claim 16, wherein the stiffener grid is joined to the plate, via adhesives.

21. The construction panel or tile as claimed in claim 16, wherein the stiffener grid contains perforations on its flange used to enhance bonding between the stiffener grid and the plate, when the stiffener grid is joined through curing of the cementitious material.

22. A process of fabricating a cementitious panel/tile, comprising:

forming a plate made of a cementitious material comprised of fiber-reinforced cement, concrete or gypsum;

providing a stiffener grid made of a metal sheet stamped into a hat-section shape, at an underside of the plate to increase bending stiffness to the panel/tile; and

applying a top finishing layer to the cementitious plate to provide both decorative and durability properties of the panel/tile.

23. The process as claimed in claim 22, further comprising the step of embedding the upper surface of the stiffener grid into the cementitious material at the underside of the plate, when the cementitious material is cast into a panel/tile form for curing.

* * * * *