US 20060101773A1

(19) United States

(12) Patent Application Publication

(10) Pub. No.: US 2006/0101773 A1

(43) Pub. Date: May 18, 2006

Turner et al.

(54) UNDERLAYMENT FOR TILE SURFACE

(75) Inventors: **Brian H. Turner**, Walton, KY (US); **Vernon Kallenborn**, Walton, KY (US)

Correspondence Address:
WOOD, HERRON & EVANS, LLP
2700 CAREW TOWER
441 VINE STREET
CINCINNATI, OH 45202 (US)

(73) Assignee: **North American Tile Tool Company**, Florence, KY

(21) Appl. No.: **11/153,275**

(22) Filed: **Jun. 15, 2005**

Related U.S. Application Data

(63) Continuation-in-part of application No. 10/973,480, filed on Oct. 26, 2004.

Publication Classification

(51) **Int. Cl.**
E04H 12/00 (2006.01)

(52) **U.S. Cl.** **52/650.3**

(57) **ABSTRACT**

Fiber-reinforced pultruded planks serve as underlayment for tile, stone or terrazzo. In one embodiment, the planks have a thin base surface with a plurality of elongated ridges. The planks have interlocking tongue and groove edges. The elongated ridges have a narrow base and a wider distal portion wherein the areas between adjacent ridges have a trapezoidal cross sectional configuration with the thin base resting on the support. Tile can be adhered to the surface using a rigid cementitious adhesive which fills in the trapezoidal area, creating a very rigid support structure. If the planks are reversed with the ridges resting on the support, tile or stone can be adhered to the relatively smooth thin base with an epoxy adhesive.

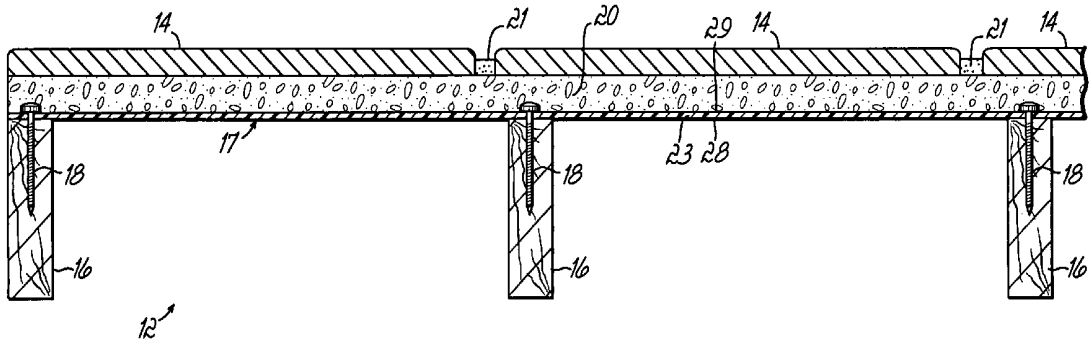

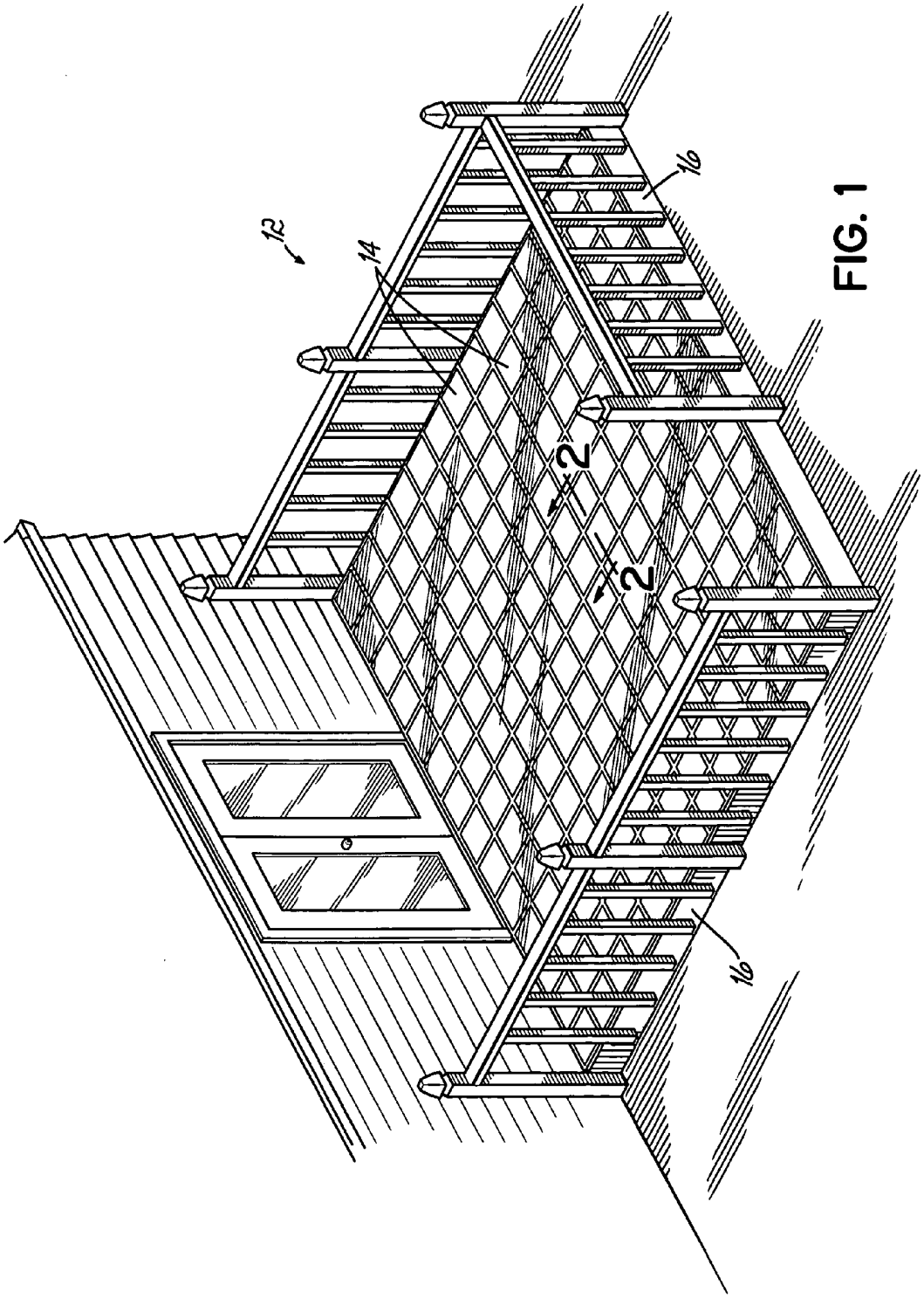

FIG. 1

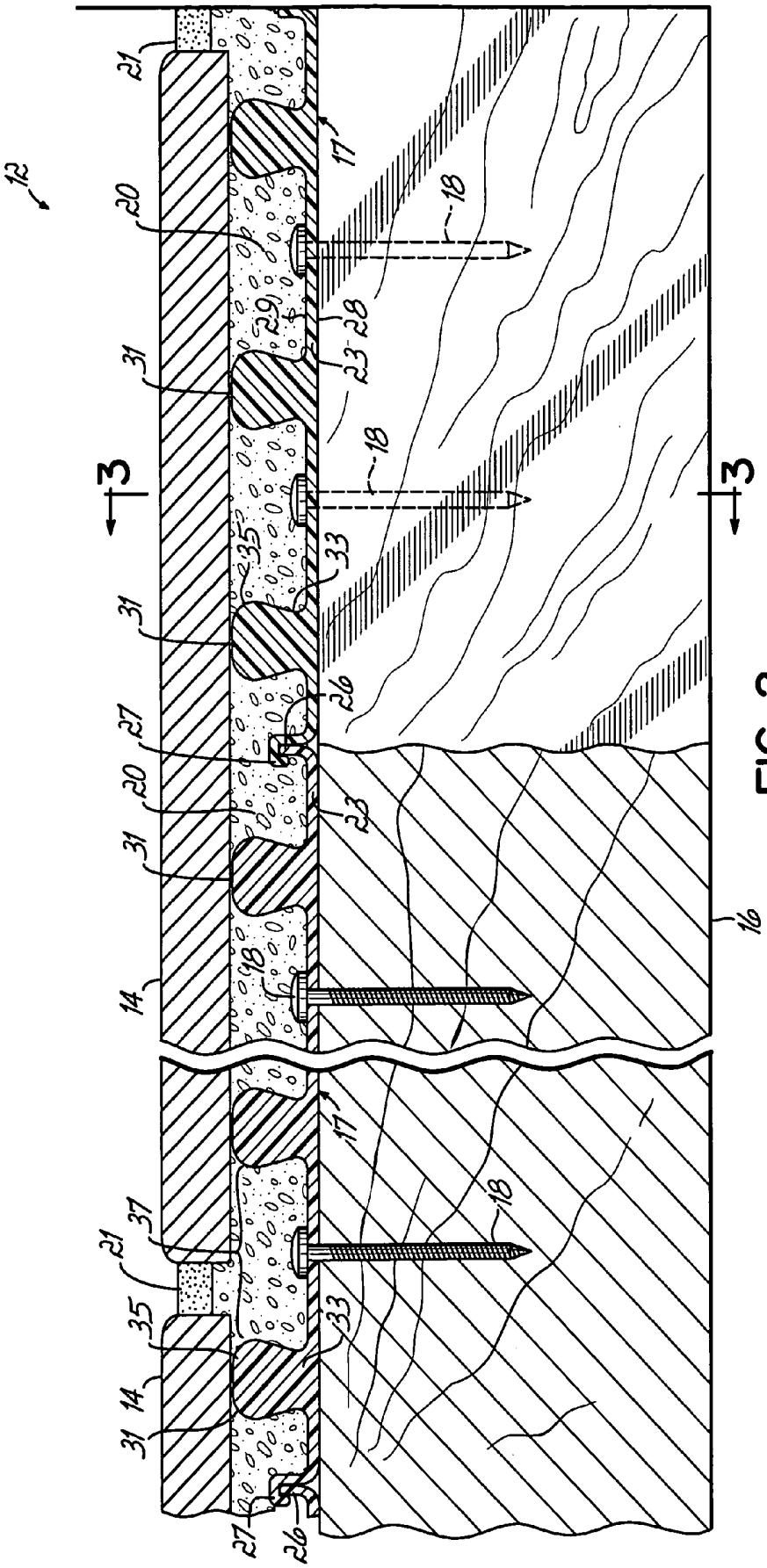
12
21
20
31
31
27
20
31
14
17
18
29
28
23
18
3
3
35
33
26
23
16
17
18
37
21
35
14
31
27
26
33

FIG. 2

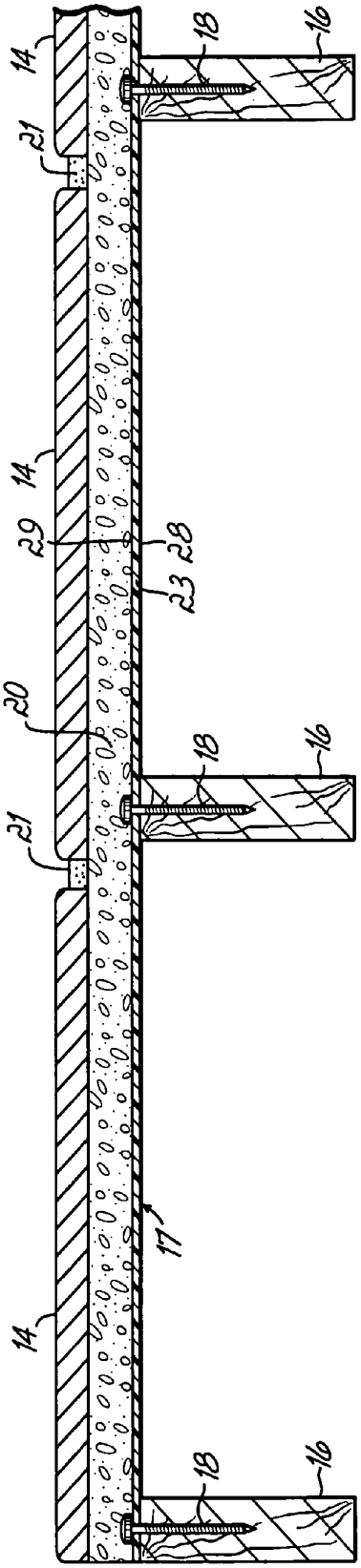
14
21
14
29
28
23
20
21
14
18
16
18
16
18
16
17
12

FIG. 3

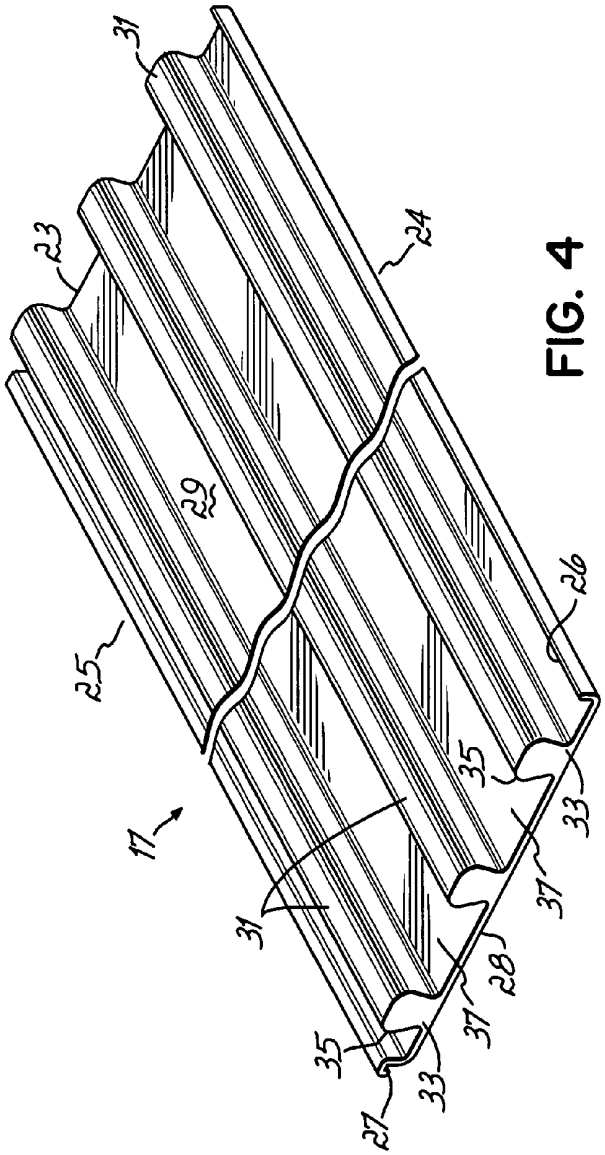
31
23
24
29
25
26
35
33
17
31
37
28
37
35
33
27

FIG. 4

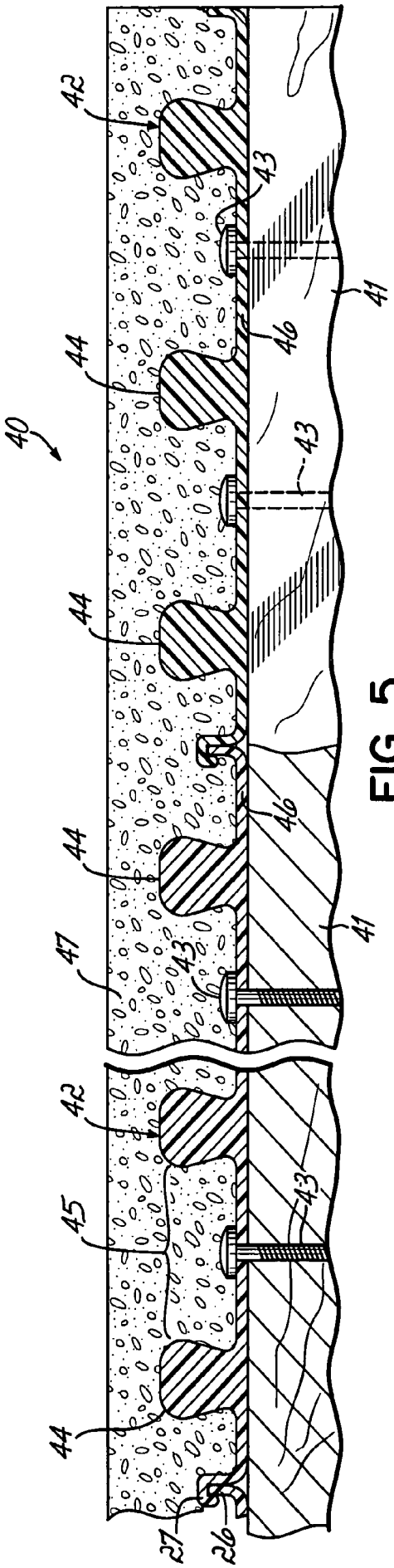

FIG. 5

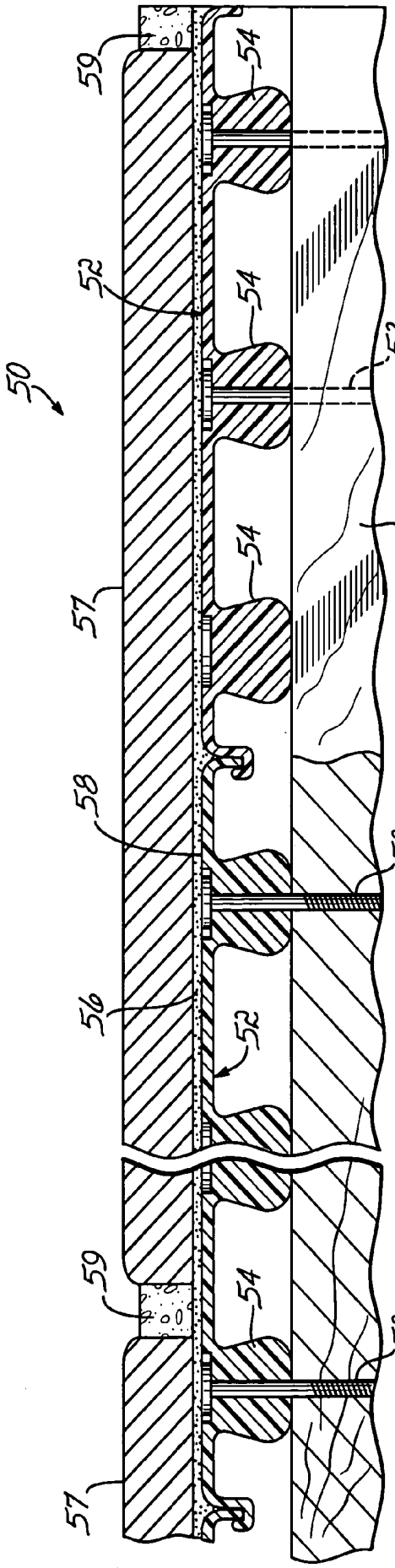

FIG. 6

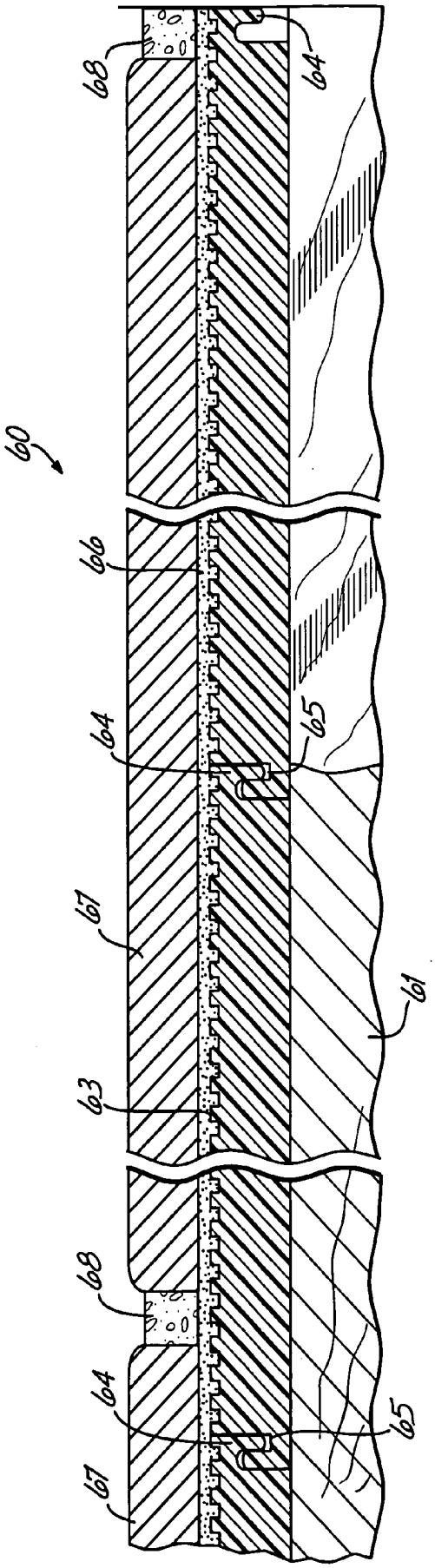

FIG. 7

UNDERLAYMENT FOR TILE SURFACE

RELATED APPLICATION

[0001] This application is a continuation-in-part application of U.S. patent application Ser. No. 10/793,480, filed on Oct. 26, 2004. The entire disclosure of this application is incorporated herein by reference

BACKGROUND OF THE INVENTION

[0002] Tile is an excellent floor covering. It is very durable and generally easy to clean. However, tile is also extremely brittle. Therefore, when it is positioned on a floor it must have a subsurface that does not flex. This can be, for example, a concrete surface or a cementitious underlayment such as Wonderboard™. Materials such as wood, including plywood and particle board are generally unacceptable.

[0003] Outdoor applications have additional concerns because of the temperature variations, as well as the effects of water during these temperature variations. Wood is unacceptable in these applications as well as cementitious substrates.

[0004] Cement will function as an exterior tile support surface, but it obviously cannot be used in all applications. These problems also exist with a terrazzo floor.

SUMMARY OF THE INVENTION

[0005] The present invention is premised on the realization that a pultruded plank having elongated ridges or ribs can be utilized as an underlayment material for tile. In particular, this pultruded plank forms an excellent underlayment for outdoor decks enabling one to cover a deck surface with ceramic tile, porcelain tile, or stone.

[0006] The pultruded planks can be used with the ridges facing upwardly. In this embodiment a cementitious filler or adhesive would fill the area between the ridges. The cementitious material can be cement, or terrazzo. It can also be a thinset adhesive which, in turn, would bond tile or stone to the plank. The pultruded plank has a smooth side. This can be the upper surface as well. In this embodiment an epoxy would be used to bond tile or stone to the plank.

[0007] Surprisingly, all of these structures provide a heavy duty surface capable of supporting very heavy loads. Also, all of these structures can withstand wide temperature variations.

[0008] The objects and advantages of the present invention will be further appreciated in light of the following detail description and drawings in which:

BRIEF DESCRIPTION OF THE DRAWINGS

[0009] **FIG. 1** is a perspective view of a deck surface according to the present invention;

[0010] **FIG. 2** is a cross sectional view taken at lines **2-2** of **FIG. 1**;

[0011] **FIG. 3** is a cross sectional view taken at lines **3-3** of **FIG. 2**;

[0012] **FIG. 4** is a perspective view of the pultruded plank of the present invention;

[0013] **FIG. 5** is a cross sectional view of an alternate embodiment of the present invention;

[0014] **FIG. 6** is a cross sectional view of a second alternate embodiment of the present invention; and

[0015] **FIG. 7** is a cross sectional view of a third alternate embodiment of the present invention.

DETAILED DESCRIPTION OF THE INVENTION

[0016] As shown in **FIGS. 1-4**, the present invention includes a deck **12** (as shown attached to a house) which is covered with rigid covering **14**. The rigid covering can be ceramic tile, porcelain tile, or stone. Hereinafter, the rigid covering will be referred to as tile. The deck itself is of typical construction formed from beams such as wood beams **16** which are, in turn, covered with pultruded planks **17** fastened to the beams with penetrating fasteners such as screws **18** (as shown) or nails, and the like. A cementitious adhesive layer **20** is used to adhere the tile **14** to the pultruded planks **17**. The area between the individual tiles **14** is filled with grout **21**.

[0017] The planks **17**, as indicated, are preferably fiber-reinforced pultruded planks. Preferably, the pultruded plank **17** is formed from a thermo setting polyester resin with about 25%-70% by volume fiberglass filler. Preferably, the fiberglass is 50% by volume (65% by weight). This has a high modulus of elasticity and high tensile strength.

[0018] These planks include a base **23** having a first side **24** and a second side **25**. As shown, the first side edge **24** bends upwardly to form a tongue **26**, and the second side **25** includes a curled edge or groove **27**. The respective tongues and grooves of adjacent planks interlock.

[0019] The base **23** has a flat bottom surface **28** and an upper surface **29**. Extending along the upper surfaces are a plurality of elongated ridges **31**. These ridges have a relatively narrow base **33** and a wider distal portion **35**. The area **37** between adjacent ridges has a trapezoidal cross sectional configuration.

[0020] The base **23** is relatively thin, being from about 1/32 to about 1/4 inch thick with about 1/16 of an inch being preferable. The ridges can extend above the base up to 1/2 inch, with about 3/8 inch being preferred. The dimensions would obviously vary depending upon the application. Typically a 1/16 inch base with a ridge extended 3/8 inch above the base is adequate for spanning beams positioned at 16 inches on center.

[0021] The base of the ridge may be 1/8 to 1/2 inch, preferably 1/4 inch. The top of the ridge should be 1/8 to 1/4 inch wider than the base of the ridge. The spacing between ridges at their base should be 1/2 to 2 inches, with 1 inch preferred.

[0022] The width from side to side is a matter of choice. It can be as narrow as 4 inches or as wide as several feet. A wider plank is more difficult to manufacture. Therefore, a width of 4 to 12 inches is preferable. Likewise, the length is a matter of choice. Generally, these will be at least 18 feet or longer.

[0023] To apply a tile surface **14** to a deck structure as shown in the figures, one simply places the planks **17** on the

beams **16** with the tongue **26** and groove **27** of adjacent planks interlocked. Screws or nails **18** may be driven through the base into the deck beams. However, it is possible to not use fasteners and allow the planks to float on the beams.

[**0024**] Once the deck is covered, the trapezoidal areas **37** are filled with a hardening floor tile adhesive material with sufficient adhesive to extend slightly above the upper surface **35** of the ridges, and to fill in the trapezoidal areas **37**.

[**0025**] Tiles **14** are then positioned on the planks and pressed into contact with the cementitious adhesive **20**. The adhesive is allowed to set and the tiles are permanently adhered to the planks **17**. Grout **21** is applied between adjacent tiles to form the finished deck.

[**0026**] As shown in **FIG. 5**, the present invention can also be used as an underlayment for either terrazzo or a concrete structure. **FIG. 5** shows a terrazzo structure **40** that is supported on wood beams **41**. A plurality of the pultruded planks **42** are fastened with nails **43** to the wood beam **41**. As shown, the planks **42** include ridges **44** separated by channels **45** and a lower smooth base surface **46**. The terrazzo material **47** is simply applied over this structure to fill in the channels **45**. This is then allowed to set and is ground down to a smooth surface, as is typical for terrazzo. The planks **42** installed in this manner also allow a concrete surface to be poured over a wooden frame or a metal frame structure. The installation is the same as for terrazzo, except cement is substituted for terrazzo.

[**0027**] A second alternate embodiment is shown in **FIG. 6**. In this embodiment, the planks **52** are fastened to wood beams **51** with the ridges **54** of the planks resting on the wood beam **51**. These are held in position with fasteners **53**. The tiles **57** are adhered to the smooth surface **58** of the planks **52** utilizing a thermoset adhesive, more specifically an epoxy adhesive layer **56**. Grout **59** is applied between the tiles **57** after the adhesive has set.

[**0028**] In this embodiment, the epoxy adhesive is required because the tile is being adhered to a relatively smooth surface. A cementitious adhesive would not function as well as the thermoset adhesive used in this embodiment.

[**0029**] A third alternate embodiment is shown in **FIG. 7**. Again, in this embodiment wood beams **61** support a tiled structure **60**. Placed across wood beams **61** are pultruded planks **62** that have a tongue structure **64** on one side and a groove structure **65** on the opposite side. As shown, the upper surface **63** of the plank has a roughened surface to promote adhesion. However, this is not necessarily required. In this embodiment, the tiles **67** are preferably adhered to the upper surface **63** with a thermoset adhesive **66**. Upon setting, grout **68** is applied between the individual tiles.

[**0030**] In this embodiment, the planks **62** have a solid cross section without the ribs and channels shown in previous embodiments. All of these structures are particularly suited for outdoor application. They can all withstand the fluctuations of ambient temperatures, and can withstand very high applied pressures.

[**0031**] In order to test the strength of a tile structure utilizing the present invention, several different specimens were prepared and subjected to a modulus of rupture test ISO-10545-9. The different specimens included:

[**0032**] Specimen **1**: Ceramic tile 4 inches×19 inches;

[**0033**] Specimen **2**: The pultruded structure (4 inches×10 inches) as shown in **FIG. 4** without any thinset or adhesive or tile. The thickness was ½ inch;

[**0034**] Specimen **3**: ⅜ inch pultruded board with the same porcelain tile as in specimen **1** adhered to the board with an epoxy adhesive, as shown in **FIG. 6**;

[**0035**] Specimen **4**: ½ inch pultruded board with the same porcelain tile as in specimen **1** adhered with epoxy as shown in **FIG. 6**;

[**0036**] Specimen **5**: ½ inch pultruded board with thinset adhering porcelain tile, as shown in **FIGS. 2 and 3**;

[**0037**] Specimen **6**: The same specimen as in specimen **5** except with ⅜ inch thick pultruded board;

[**0038**] Specimen **7**: Same as **6**.

[**0039**] The results for these tests is shown in Table 1, below.

TABLE 1

Specimen #	P = Load (N)	M = MOR (N/mm^2)	B = Break Strength (N)	kg (Load)	lbs (Load)	Specimen #	Flexural	Failure Type
1	431.2	55.1	2178.7	44	96.9	1	55.174	Compression
2	1597.4	4421.9	7546.8	163	359.0	2	4421.9	No Failure
3	8823.9	449.1	41687.8	900.4	1983.3	3	449.4	No Failure
4	88.23.9	449.1	41687.8	900.4	1983.3	4	449.7	No Failure
5	1485.7	19.6	7019.0	151.6	333.9	5	19.6	Shear
6	21234.4	47.7	10084.0	217.8	479.7	6	47.7	Shear
7	1793.4	40.1	8472.8	183	403.1	7	40.1	Shear

[**0040**] As demonstrated from these examples, Specimen **1** failed at a load of 44 kilograms, as was expected. Specimen **2** did not fail and reached maximum flex at a load of 163 kilograms. Surprisingly, Specimens **3** and **4** did not fail with a load of over 900 kilograms. Further, the specimen bent over ½ of an inch when subjected to this load, without cracking. Specimens **5**, **6** and **7** each withstood loads ranging from 151 kilograms to 217 kilograms, whereupon they broke. But the failure was in sheer, when the tile separated from the thinset, allowing the breakage to occur. Thus, it was the thinset or adhesive that permitted the break, as opposed to the underlayment. Further, the loads that these three specimens withstood are much higher than required for a typical deck application, and are even suitable for industrial application.

[0041] The pultruded planks of the present invention are easy to install and can be cut to desired lengths with a circular saw. Holes can be easily drilled using ordinary wood drill bits, to provide clearance for water pipes, and the like, making this much easier to apply than cementitious boards. Further, it is very dimensionally stable over a wide temperature range. They can be used inside over particle board or outside as part of a tile covered deck.

[0042] This has been a description of the present invention along with the preferred method of practicing the present invention. However, the invention itself should only be defined by the appended claims,

Wherein we claim:

1. A composite structure comprising a plurality of: interconnected pultruded planks supported on a support;

a ridged covering layer adhered to said planks, said ridged covering selected from the group consisting of ceramic tile, porcelain tile and stone.

2. The composite structure claimed in claim 1 wherein said structure is located outdoors.

3. The composite structure claimed in claim 1 wherein said ridged covering is adhered to said pultruded planks with a thermoset adhesive.

4. The composite structure claimed in claim 3 wherein said thermoset adhesive is an epoxy adhesive.

5. The composite structure claimed in claim 1 wherein said adhesive is a cementitious adhesive.

6. The composite structure claimed in claim 1 wherein said planks are fastened to said support.

7. The composite structure claimed in claim 1 wherein said planks are free-floating on said support.

8. The composite structure claimed in claim 1 wherein said plank has a thin base surface and a plurality of ridges running along a length of said surface with channels between said ridges.

9. The composite structure claimed in claim 8 wherein said ridged covering is adhered to the thin base surface of said planks with a thermoset adhesive.

10. A composite cementitious structure comprising a plurality of interconnected pultruded planks supported on a support;

said pultruded planks having a base surface and a plurality of ridges running along a length of said planks forming channels between said ridges;

a cementitious material over said ridges and said channels forming an outer cementitious surface layer.

11. The structure claimed in claim 10 wherein said cementitious surface layer is terrazzo.

12. The structure claimed in claim 11 wherein said planks are interconnected with interengaging tongue and groove structures.

* * * * *