US 20120279655A1

(19) United States

(12) Patent Application Publication

(10) Pub. No.: US 2012/0279655 A1

(43) Pub. Date: Nov. 8, 2012

D'Agostino

(54) ARTICLES AND METHODS FOR LAYING CERAMIC TILE FLOOR

(76) Inventor: **Joseph D. D'Agostino**, Grand Island, NY (US)

(21) Appl. No.: **13/466,649**

(22) Filed: **May 8, 2012**

Related U.S. Application Data

(63) Continuation-in-part of application No. 13/004,329, filed on Jan. 11, 2011, which is a continuation-in-part of application No. 12/815,633, filed on Jun. 15, 2010.

(60) Provisional application No. 61/485,871, filed on May 13, 2011.

Publication Classification

(51) **Int. Cl.**

E04F 15/08 (2006.01)
B32B 37/12 (2006.01)
B32B 18/00 (2006.01)
B32B 37/14 (2006.01)

(52) **U.S. Cl.** **156/331.7**; 156/60; 156/327; 156/325; 428/446

(57) **ABSTRACT**

Ceramic floors and methods of making thereof such that the ceramic tiles are quickly and easily removable from the floor substrate and replaceable at a future date.

A ceramic tile floor is laid by releasably adhering a sheet to a floor substrate and bonding at least one ceramic tile to the sheet.

A plurality of pre-fabricated articles each comprising a sheet and one or more ceramic tiles bonded to the sheet are laid onto the floor substrate with sheet edges abutting, and the sheets are releasably adhered to the floor substrate. The tile edges are set inwardly from the sheet edges so that a tile of one article is spaced from a tile of another article when the articles are laid. A non-Portland cement grout, preferably urethane grout, is provided between adjacent tiles.

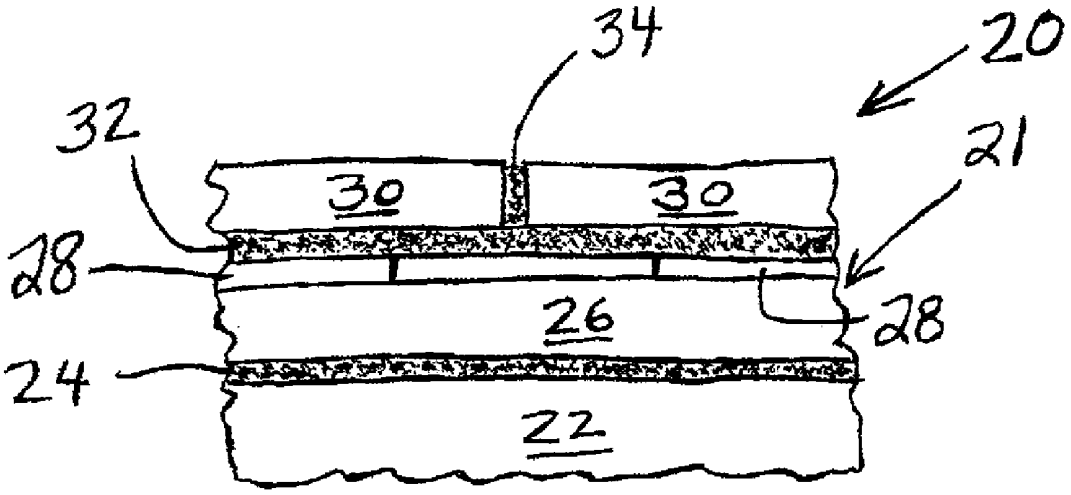

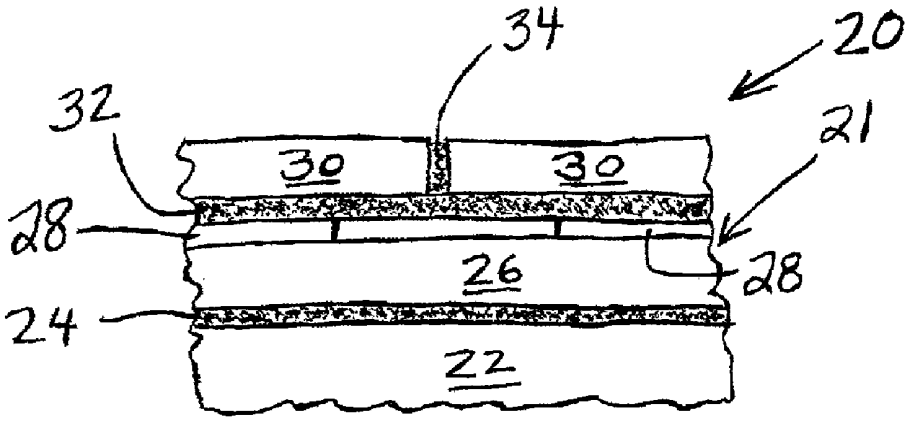

FIG. 1A

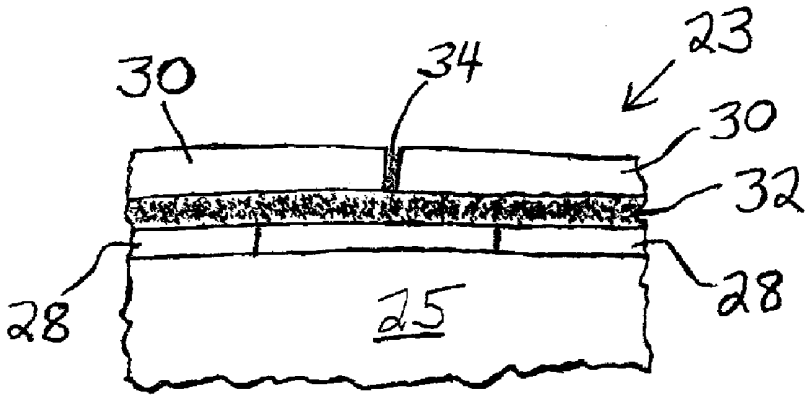

FIG. 1B

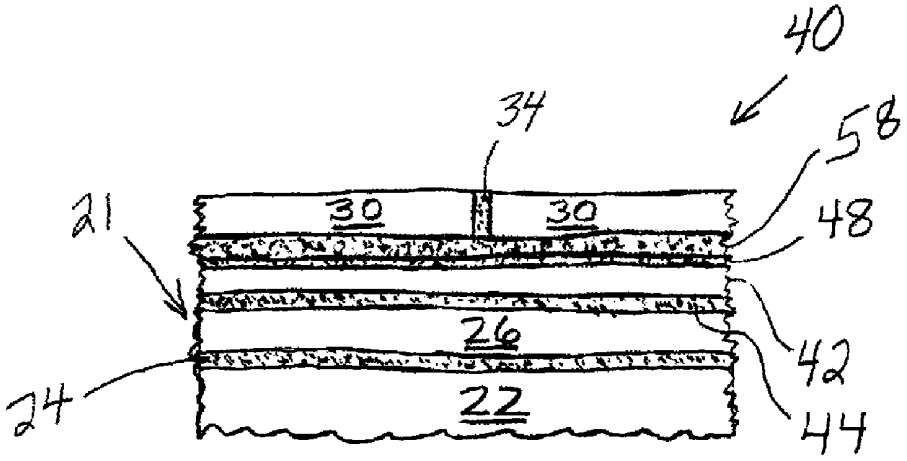

FIG. 2

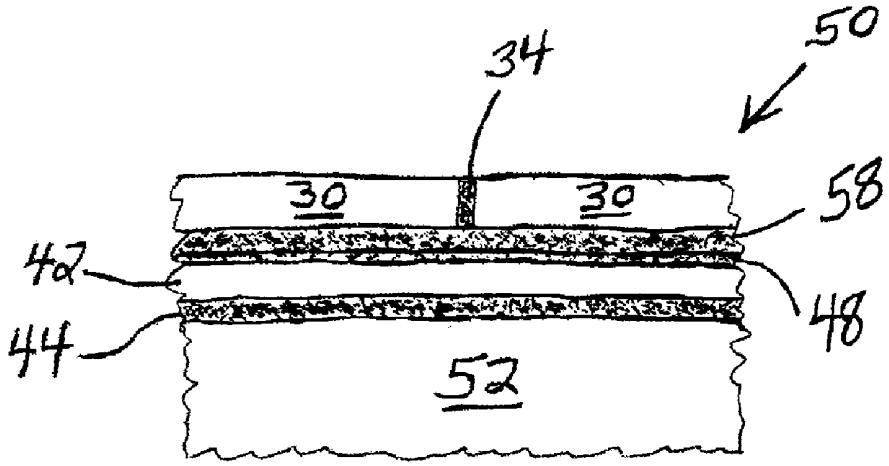

FIG. 3

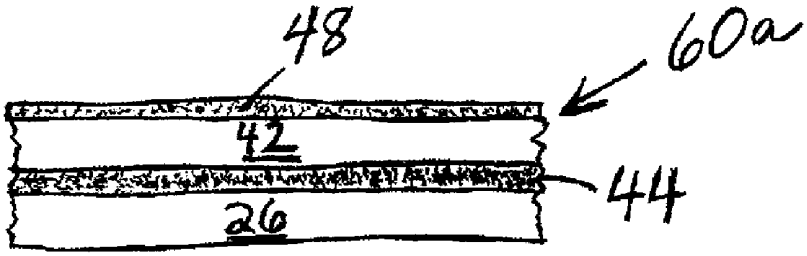

FIG. 4

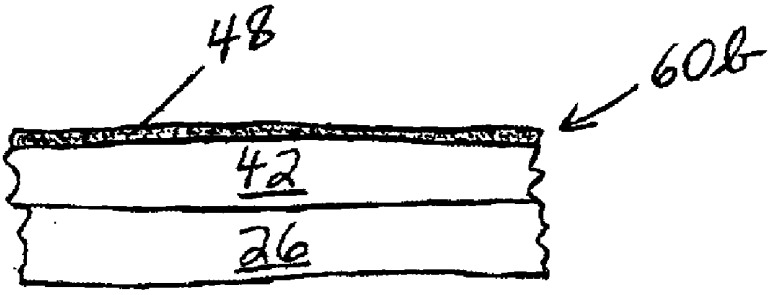

FIG. 5

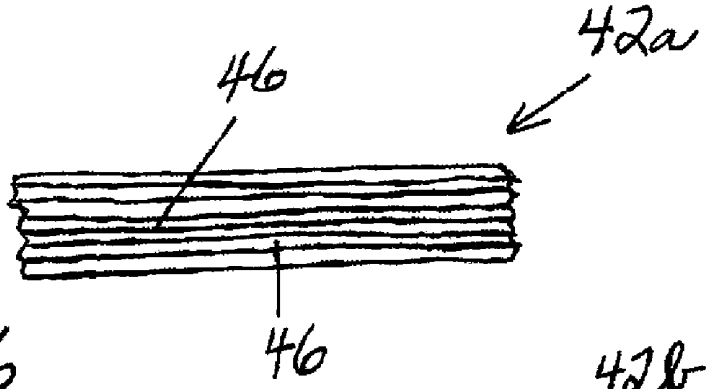

FIG. 6

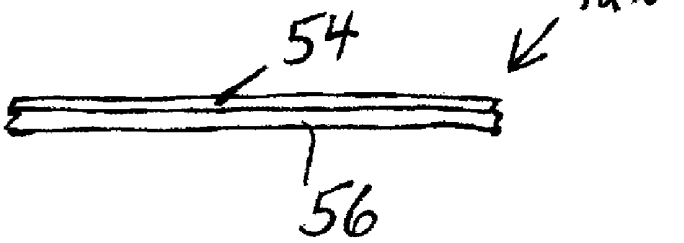

Fig. 7

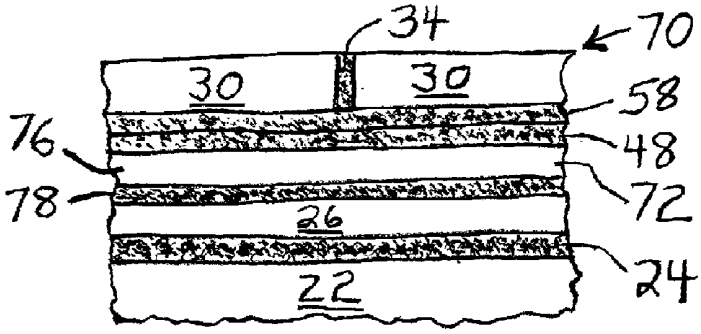

FIG. 8

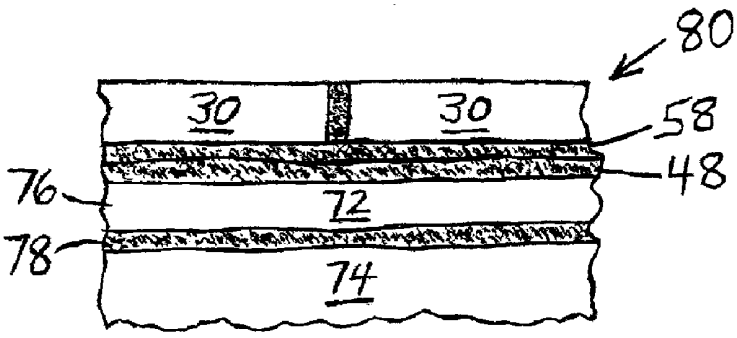

FIG. 9

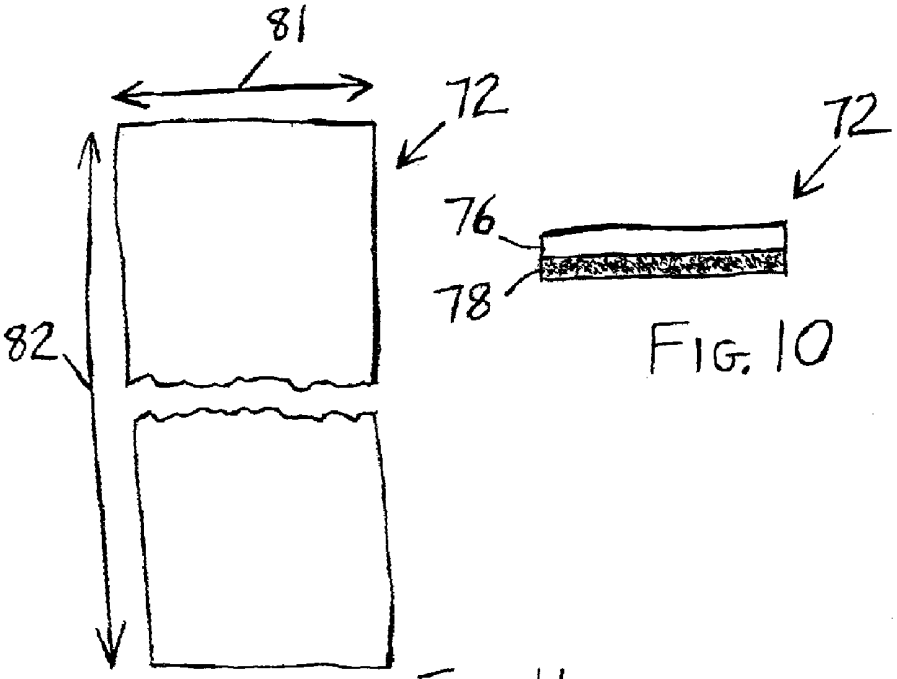

FIG. 10

FIG. 11

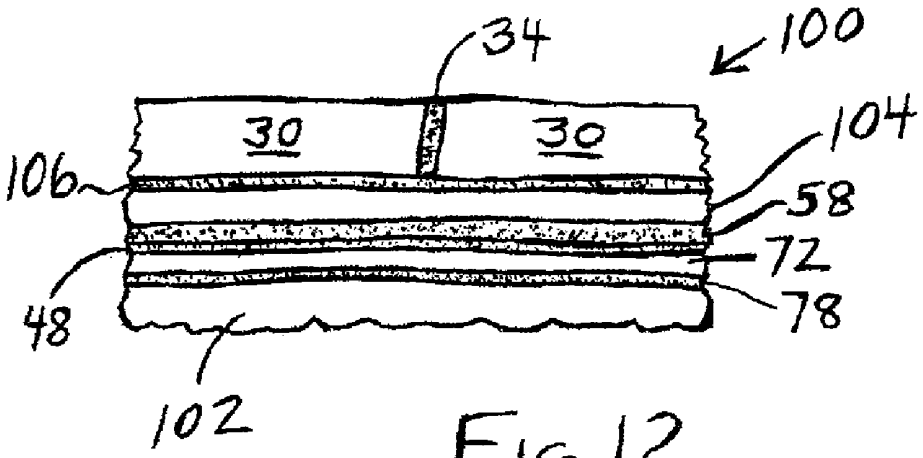
34
100
30
30
104
106
58
72
48
78
102

FIG. 12

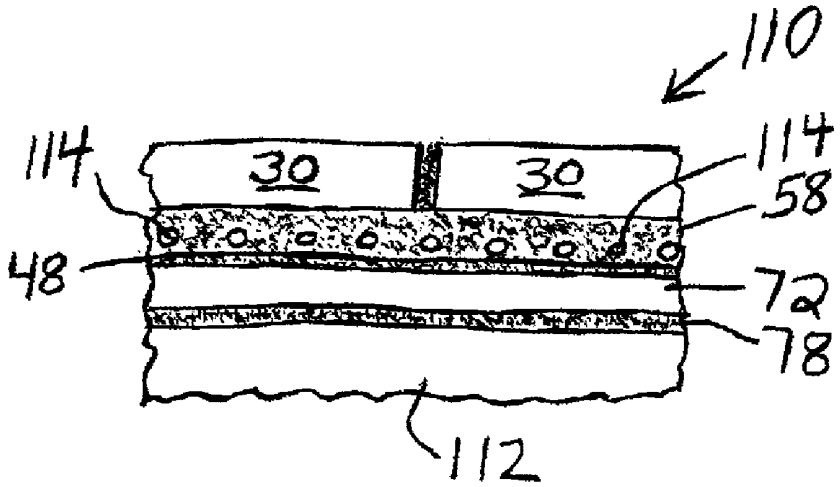
110
114
30
30
114
58
48
72
78
112

FIG. 13

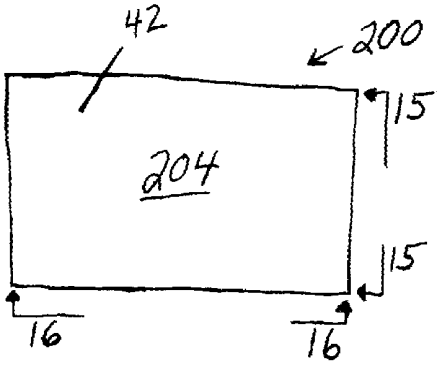

FIG. 14

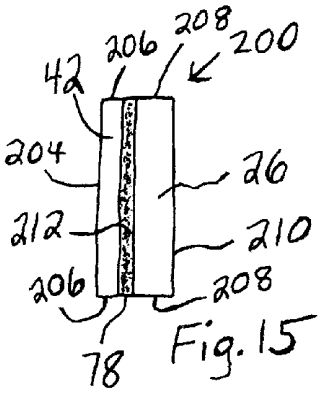

Fig. 15

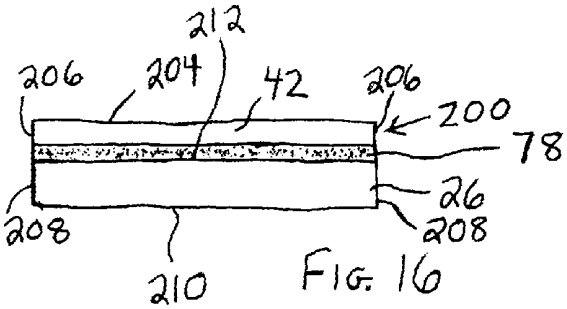

FIG. 16

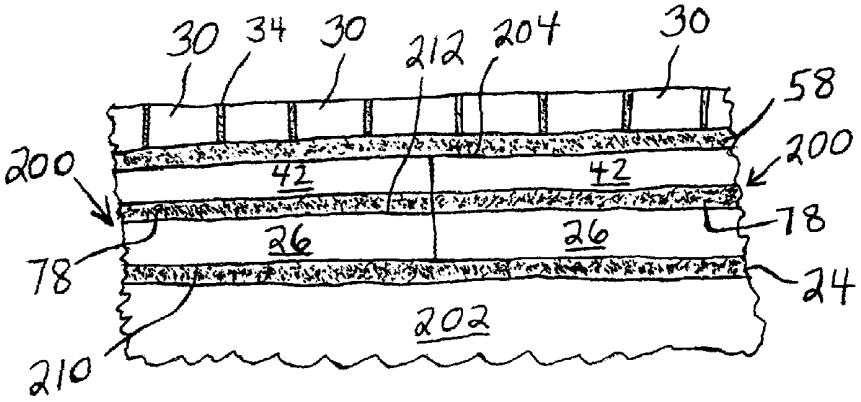

FIG. 17

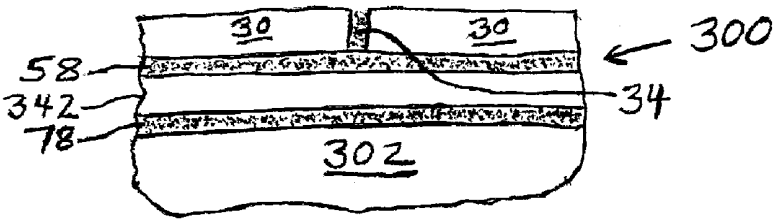

FIG. 18

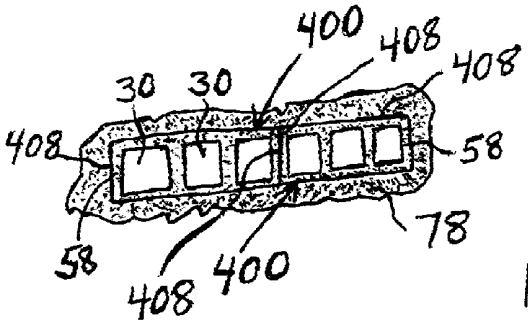

FIG. 21

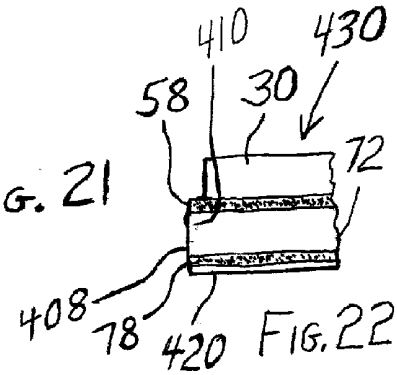

FIG. 22

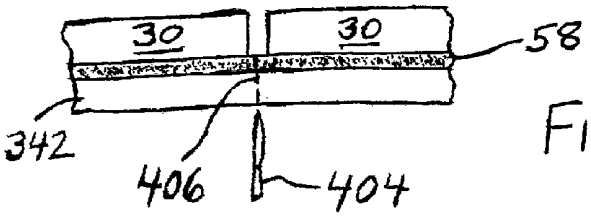

FIG. 19

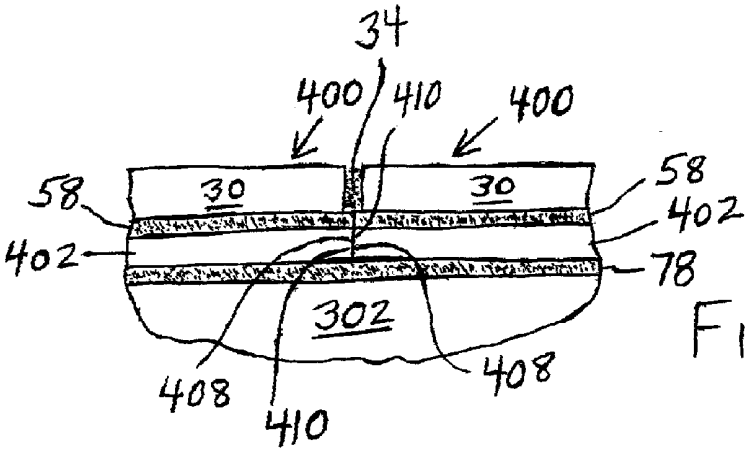

FIG. 20

ARTICLES AND METHODS FOR LAYING CERAMIC TILE FLOOR

[0001] This is a continuation-in-part of application Ser. No. 13/004,329, filed Jan. 11, 2011, which is a continuation-in-part of application Ser. No. 12/815,633, filed Jun. 15, 2010, and the priority of provisional application 61/485,871, filed May 13, 2011, is hereby claimed, and all of these applications are hereby incorporated herein by reference.

[0002] The present invention is related generally to flooring. More particularly, the present invention is related to ceramic tile flooring.

[0003] In order to have sufficient strength to accept ceramic tile, an underlying floor may need to be built-up. For example, it may be necessary to add backer board or a second layer of plywood to a plywood floor. A backer board is a strong dense board (typically 3×5 or 4×4 or 4×5 feet and typically ¼ to ½ inch thick) typically laid on and bonded with conventional latex-modified thinset mortar and attached by screws, nails, or other fasteners to a wood floor to add strength thereto and to support tile so that it doesn't crack. By "latex-modified" is meant the addition of latex or other suitable polymers, in a manner in accordance with principles commonly known to those of ordinary skill in the art to which the present invention pertains, to the thinset mortar to increase its bonding strength. Backer board may be composed of cement, dense wood, gypsum material faced with fiberglass, or other suitable material providing the necessary strength and rigidity. A concrete floor is considered to normally have sufficient strength and rigidity that it does not normally require backer board to be applied thereto. When applied to a floor or floor substrate, unless otherwise specified, a backer board is considered herein to be part of the floor or floor substrate.

[0004] A tile is a thin (for example, ⅛ to ½ inch thick) usually rectangular or square (for example, 1-foot square) typically decorative member used to cover floors, the tiles abutting each other across the surface of the covered or tiled floor. Two common types of tile commonly used for flooring may be classified as vinyl and ceramic. As used herein and in the claims, the term "ceramic tile" is intended to include tile made of fired clay, brick, concrete, porcelain, marble, travertine, and other stone or slate, and does not include vinyl tile.

[0005] Vinyl tiles are sufficiently flexible and have enough "give" that they do not need the extra strength and rigidity afforded by backer boards and therefore can be laid directly on a wood floor.

[0006] In a typical laying of a floor, ceramic tiles have been permanently bonded to the concrete, wood, or backer board substrate, and such a tiled floor is considered satisfactory for use. When it is desired to replace the tiles either to selectively replace certain tiles or for re-decorating purposes or otherwise, difficulties are experienced. Removal of tiles off concrete is considered to be difficult (may need a jack hammer or the like), and removal off backer board or wood may damage the backer board or the wood floor.

[0007] The attachment of backer board to a hardwood floor for strengthening thereof so that it may accept ceramic tiles may damage the hardwood floor.

[0008] Solutions have been proposed for easily removing floor coverings attached to a floor. For example, for carpet, U.S. Pat. No. 5,116,439 discloses a two-component release web secured between a carpet (or other floor covering) and a floor. The web is formed as a laminate of a solid flexible carded fiber membrane to which a solid flexible non-woven spun-bonded fiber membrane is adhered, one membrane being adhered to the carpet during manufacture and the other membrane being glued to the floor during installation. It is further stated that the carpet may be peeled from the floor leaving one membrane secured to the carpet and the other membrane secured to the floor, thus permitting reuse of the carpet in another location and permitting ready installation of a new carpet over the membrane secured to the floor.

[0009] This U.S. Pat. No. 5,116,439 also discusses an adhesive carpet installation system which uses a carpet cushion with a "fuzzy" fibrous material bonded to one surface of the cushion. The cushion is glued to the floor surface with the "fuzzy" surface down through use of a pressure sensitive adhesive. The carpet itself is then glued to the upper surface of the cushion using the same pressure sensitive adhesive used to secure the cushion to the floor. It is said that this renders the carpet system totally releasable.

[0010] Other U.S. patents/published applications which may be of interest to the present application include Re. 34,357; U.S. Pat. Nos. 3,364,058; 3,765,972; 4,698,249; 5,188,874; 5,501,895; 5,578,363; 6,413,335; 6,630,041; 6,698,149; 6,854,241; 7,183,338; 7,194,843; 7,488,523; 7,520,948; 7,536,835; 7,543,417; 2005/0183370; 2005/0223664; 2007/0151184; and 2009/0218030. All of these U.S. patents/published applications and any others disclosed herein are hereby incorporated herein by reference.

[0011] Published patent application 2007/0151184 discloses an easy to install and remove tile system for tiles, particularly resilient tiles, such as vinyl, wherein the tiles are adhered to a high modulus high tear strength liner, such as a rigid vinyl film, which is caused to float on (not attached) or is adhered to the substrate. The adhesive adhering the tile to the liner may be adhesive dots applied to each corner of the tile, pressure-sensitive adhesive, or a spray adhesive. Other examples of what might be called a "loose-lay" process are disclosed in the aforesaid U.S. patents/published application Re. 34,357; U.S. Pat. Nos. 5,188,874; 5,578,363; and 2005/0223664.

[0012] Published patent application 2009/0218030 discloses a flooring underlayment membrane bonded to a concrete or wood substrate with thinset mortar (or loose-laid) and tile or stone or slate or other rigid floor covering bonded thereto with thinset mortar. The underlayment membrane comprises two nonwoven fiber mats bonded together with an extrudable thermoplastic resin to provide a combined waterproof membrane and crack isolation membrane.

[0013] Congoleum of Mercerville, N.J., markets a 6 feet wide membrane known as an Underfloor membrane which comprises a combination of fibrous felt and pvc (polyvinylchloride) vinyl, and Mannington of Salem, N.J., markets a 6 feet wide membrane known as a mul membrane ("mul" is also a fibrous felt and pvc vinyl combination) wherein the membranes are loosely laid for application of vinyl tiles bonded thereto. Vinyl tiles are sufficiently flexible that they would not normally be expected to experience the difficult cracking and breaking problems that rigid ceramic tiles would experience when laid loosely.

[0014] Avaire Floors (having a world wide web address of www.avairefloors.com and whose parent is believed to be called SnapStone) provides a loose lay system which includes porcelain or stone tiles permanently bonded to a plastic grid with a rubberized base. The plastic grids have interlocking tabs which allow them to be clicked together so that they do

not move. It is believed that these tiles are grouted with the flexible grout disclosed in the aforesaid U.S. Pat. No. 7,183,338. Such plastic grid tiles are undesirably thicker so there is more transition to overcome when one goes from one room to another. Also, such plastic grid tiles undesirably do not allow the laying of conventional ceramic tiles, i.e., ceramic tiles without such plastic grids attached.

[0015] U.S. Pat. No. 7,520,948 discloses a non-woven fabric which may comprise a synthetic polymer and which is adhered to a floor using an adhesive, and a cementitious bondant (i.e., a skimcoat of thinset mortar) is applied to the fabric, either before or after adhering it to the surface of the floor. A covering in the form of ceramic tile, stone, brick, porcelain, marble, slate, etc. is thereafter bound to the bondant. It is stated that the bondant can be any suitable adhesive, mortar, or other composition or any combination of such substances suitable for fixing the covering to the fabric. The adhesive can be a contact cement or self-stick adhesive faced by a removable waxed paper. It is discussed therein that the non-woven fabric can aid removal of the covering (i.e., tile) at a time following its installation. Examples of non-woven fabrics are said to include randomly-entangled fibrous sheets, chemically-bonded fibrous sheets, thermally-bonded fibrous sheets, and others known in the art. The adhesive may be a contact cement, and the non-woven fabric (underlayer) can have an adhesive (e.g., a self-stick adhesive faced by a removable waxed paper) disposed on the face opposite the bondant. The tile is bound to the fabric by way of a thinset mortar or adhesive set atop a cementitious bondant applied to the fabric. U.S. Pat. No. 7,520,948 suggests that the cohesive strength of the fabric is such that it should tear internally to aid removal of the covering (i.e., ceramic tile or the like) at a time following its installation. It is further stated that in situations in which reversibility of fabric installation is desirable, it is preferable that the adhesive bind the fabric to the surface with little more tenacity than required for stable installation of the fabric and covering and that in a situation such as a ceramic tile floor in which significant stresses, wear, and tear are anticipated, the adhesive must bind the fabric to the surface with sufficient tenacity and stability that the fabric will not significantly separate from the surface under the conditions of normal use.

[0016] The above U.S. Pat. No. 7,520,948 importantly does not disclose whether the floor to which the non-woven fabric is adhered is a concrete floor, a wood floor on which backer board has been laid, a hardwood floor, or otherwise. Moreover, U.S. Pat. No. 7,520,948 discusses in very broad and general terms non-woven fabrics and adhesives for application to floors generally without any suggestions as to what items or combination of particular items might be suitable for one type of floor (substrate) and what might be suitable for another type of floor (substrate).

[0017] A contact cement or self-stick adhesive is commonly understood to be an adhesive or cement which is sticky (tacky) without any heat or solvent for activation and adheres with light pressure. Such an adhesive may be of a type which forms a permanent or non-removable bond so that the bonded item is not readily removable from the substrate. By suggesting that the non-woven fabric should tear internally to aid removal of the covering, the above U.S. Pat. No. 7,520,948 implies that the adhesive is of a type that permanently bonds the fabric to the floor. Such a product would however undesirably damage a hardwood floor to which the fabric is permanently bonded.

[0018] I have recently learned that it is common practice for companies that have ceramic tile on exhibit temporarily in convention halls to bond the ceramic tile to Kraftpaper that is laid loose on concrete floors whereby the tile can be easily removed at the end of the period of exhibition. I have also recently learned that some ceramic tile showrooms bond ceramic tiles to vinyl sheets that are bonded to a concrete floor with a minimal amount of releasable adhesive whereby they can be easily changed when it is so desired. To my knowledge, such exhibition and showroom flooring has not been used on any floor substrates other than concrete.

[0019] It is accordingly an object of the present invention to prepare a floor so that ceramic tiles may be laid thereon such that they are quickly and easily removable and replaceable at a future date.

[0020] It is another object of the present invention to provide a pre-fabricated article for use in easily and quickly preparing the floor to lay the ceramic tiles.

[0021] It is yet another object of the present invention to provide a prefabricated ceramic tile composite article to ease the laying of the ceramic tile on-site and to prepare a floor so that the prefabricated articles may be laid thereon such that they are quickly and easily removable and replaceable at a future date.

[0022] The above and other objects, features, and advantages of the present invention will be apparent in the following detailed description of the preferred embodiments thereof when read in conjunction with the appended drawings in which the same reference numerals depict the same or similar parts throughout the several views.

BRIEF DESCRIPTION OF THE DRAWINGS

[0023] FIG. **1**A is an illustration of an edge view of a portion of flooring which embodies the present invention, wherein the flooring substrate is wood and includes backer board.

[0024] FIG. **1**B is a view similar to that of FIG. **1**A of the flooring portion, wherein the flooring substrate is concrete and does not include backer board.

[0025] FIG. **2** is a view similar to that of FIG. **1**A of a portion of flooring in accordance with an alternative embodiment of the present invention, wherein the flooring substrate includes backer board.

[0026] FIG. **3** is a view similar to that of FIG. **1**A of a portion of flooring in accordance with the alternative embodiment of the present invention, wherein the flooring substrate is concrete and does not include backer board.

[0027] FIG. **4** is a view similar to that of FIG. **1**A of a portion of an article for application to flooring in accordance with the present invention.

[0028] FIG. **5** is a view similar to that of FIG. **1**A of a portion of an alternative embodiment of the article.

[0029] FIG. **6** is a view similar to that of FIG. **1**A of an enlarged view of a sheet for the article.

[0030] FIG. **7** is a view similar to that of FIG. **6** of an alternative embodiment of the sheet for the article.

[0031] FIG. **8** is a view similar to that of FIG. **1**A of a portion of flooring in accordance with another embodiment of the present invention, wherein the flooring substrate includes backer board.

[0032] FIG. **9** is a view similar to that of FIG. **1**A of a portion of flooring in accordance with the another embodiment of the present invention, wherein the flooring substrate is concrete and does not include backer board.

[0033] FIG. **10** is a view similar to that of FIG. **1**A of a portion of an article for application to flooring in accordance with the present invention.

[0034] FIG. **11** is an illustration of a plan view of the article of FIG. **10**.

[0035] FIG. **12** is a view similar to that of FIG. **1**A of a portion of flooring in accordance with the another embodiment of the present invention, wherein the flooring substrate is hardwood.

[0036] FIG. **13** is a view similar to that of FIG. **1**A of a portion of flooring in accordance with the another embodiment of the present invention.

[0037] FIG. **14** is a plan view of an alternative embodiment of an article for application to flooring.

[0038] FIG. **15** is an edge view of the article of FIG. **14** taken along lines **15-15** thereof.

[0039] FIG. **16** is an edge view of the article of FIG. **14** taken along lines **16-16** thereof.

[0040] FIG. **17** is an edge view of a portion of flooring with a pair of the articles of FIGS. **14** to **16** applied thereto and with tiles applied thereto.

[0041] FIG. **18** is an illustration of an edge view of an alternative embodiment of flooring which embodies the present invention.

[0042] FIG. **19** is an illustration of an edge view illustrating the making of articles for application to a floor substrate in accordance with the present invention.

[0043] FIG. **20** is an illustration of an edge view of the articles of FIG. **19** applied to a floor substrate.

[0044] FIG. **21** is a plan illustrative view of the articles of FIG. **19** applied (prior to grouting) to a floor substrate.

[0045] FIG. **22** is a partial edge view of an alternative embodiment of the articles of FIG. **19**.

DETAILED DESCRIPTION OF THE PREFERRED EMBODIMENTS

[0046] Referring to FIG. **1**A, there is shown generally at **20** a tiled floor which comprises a floor **21** which includes a wood floor substrate **22** to which has been bonded by the use of the aforesaid conventional latex-modified thinset mortar, illustrated at **24**, a plurality (one shown) of strengthening backer boards **26**. As appropriate, the backer boards **26** may also be otherwise suitably attached such as by screws, nails, or other fasteners. The backer boards **26** may, for example, be Dens-Shield gypsum boards marketed by Georgia-Pacific Gypsum LLC of Atlanta, Ga., having a thickness of, for example, ¼ inch. It should be understood that, alternatively, the floor **21** may be a concrete floor substrate (as discussed hereinafter with respect to FIG. **1**B), or it may be a sufficiently rigid hardwood floor or other sufficiently rigid wood substrate which does not include the backer boards. For example, the floor **21** may include a substrate of ⅝ inch douglas fir plywood to the upper surface of which is screwed or otherwise suitably attached ⅝ inch plywood.

[0047] In accordance with the present invention, laid on top of the backer boards **26** are suitable sheets in rolls or tiles or paper or other forms such as, for example, vinyl tiles **28**, pvc (polyvinylchloride) sheets, vinyl composition rubber sheets, fiberglass sheets, or a sheet which is a combination of fibrous felt and pvc or vinyl tiles, which are unattached to the backer boards **26**. Thus, the sheets or vinyl tiles **28** are laid so as to "float" on the floor substrate **26**, i.e., they are laid unattached to the floor substrate **26**, whereby the thereafter laid ceramic tiles, as hereinafter described, can be easily and quickly removed for replacement by lifting the vinyl tiles **28**, with the ceramic tiles attached, from the floor **21**. The vinyl tiles **28** may, for example, be ⅛ inch vinyl composition 12 inch×12 inch tiles marketed by Olympia Tile of Toronto, Canada. Thinner vinyl tiles **28**, which may be less expensive, may be used. For example, for application to a concrete floor **21**, the vinyl tiles may be about 1/16 inch thick or even less. Although laid loosely, the vinyl tiles **28** should be laid tightly together so that they are not able to move around.

[0048] The ceramic tiles **30** are laid onto the floating vinyl tiles **28** and bonded thereto by the aforesaid latex-modified thinset mortar **32**, and grouting, illustrated at **34**, applied between the ceramic tiles **30**. The grouting **34** is preferably a flexible grouting as described hereafter. The ceramic tiles **30** may, for example, be 16 inch square porcelain tiles. The tiles **30** are desirably porcelain (as opposed to other ceramic tiles) because porcelain tiles are more dense and stronger than the typical other ceramic tiles. The latex-modified thinset mortar **32** may, for example, be #52 polymer modified thinset mortar marketed by Olympia Tile of Toronto, Canada.

[0049] In order to install the backer boards **26**, with the temperature at 65 degrees F. or greater, the backer boards **26**, if used, or otherwise the surface of the floor substrate should be clean and free of any protrusions, bumps, or particles that may prevent the vinyl tiles **28** from lying flat, and the backer boards **26**, if used, are suitably bonded with the thinset mortar **24** to the substrate **22**. It is recommended that the seams of the backer boards **26** be patched with a thinset and latex add mix (latex-modified thinset mortar) that is intended to bond tile to vinyl, such as Mapei's Kerabond or Keralastic mortar, marketed by Mapei of Liverpool, N.Y., and the patch fan-dried for a minimum of 60 minutes.

[0050] In order to install the tiled floor **20** (which could utilize any suitable ceramic tile of choice), the vinyl tiles or sheets **28** are laid closely adjacent to each other with no glue or other bonding agent holding them to the surfaces of the backer boards **26** (or floor substrate, if no backer boards are used), whereby the vinyl tiles **28** "float" on the backer boards or substrate. A heat gun may be used to form the vinyl tiles **28** to the backer boards **26** (or floor substrate) in areas that are slightly uneven. Masking tape is applied to hold the vinyl tiles **28** together so they do not separate and create gaps. A suitable double-faced tape or releasable adhesive is applied underneath the vinyl tiles **28** along the edges of the floor to also prevent shifting and separation. A ¼ inch to ½ inch gap should be left around all edges of the floor to allow the room to expand and contract without causing the tile to buckle, and this gap should accordingly not be filled with thinset mortar or grout. The ceramic tiles **30** are then laid and bonded to the vinyl tiles **28** with the latex-modified thinset mortar **32** and then suitably grouted after they have properly set up.

[0051] Referring to FIG. **1**B, there is illustrated generally at **23** a loosely laid ceramic floor in accordance with an alternative embodiment wherein the vinyl tiles **28** are laid loosely preferably over a concrete floor substrate **25** wherein the concrete is believed to have a rigidity to inhibit the development of tile cracking. The substrate **25** may alternatively be another suitably rigid substrate such as, for example, sufficiently rigid hardwood, not requiring the use of backer board. Preferably, in order to provide the desired rigidity, the hardwood is at least 1 inch thick, more preferably at least 1¼ inch thick.

[0052] A ceramic tiled floor similar to tiled floor **23** (i.e., over a concrete substrate) and using conventional grouting **34** has been installed experimentally in my tile store showroom for over **11** years, without my imparting to my customers the nature thereof, as a means of testing how long such a floor would hold up under normal use subjected to light foot traffic. Groups of, for example, about 16 such loose-laid tiles forming a square or the like are "trapped" within a border of ceramic strips or tiles bonded to the concrete floor with thinset mortar and grouted, whereby the "trapped" loose laid tiles are prevented from sliding. To outward appearances, the floor has had the appearance of normal ceramic tile which is usually permanently bonded to the floor and has held up without appreciable cracking of the ceramic tile. It is therefore believed that my customers and the public did not ever become aware of the experimental nature of the floor.

[0053] In order to provide a flexible grouting between the ceramic tiles to further insure against cracking of the ceramic tiles, the grouting **34** (for both concrete and wood substrates) is preferably of a type disclosed in the aforesaid U.S. Pat. No. 7,183,338 which is incorporated herein by reference and which includes polyurethane to provide the flexibility to cushion the ceramic tiles against cracking from shifting and shock loads received by the floor.

[0054] While my aforesaid showroom floor **23** has successfully withstood the light floor traffic on the concrete showroom floor with no cracks in the ceramic tile, a floor similar thereto (i.e., over a wood and backer board substrate and also using a conventional grouting and not the grouting disclosed in the aforesaid U.S. Pat. No. 7,183,338) did develop cracks when tested by the Tile Council of America. Thus, there still exists a need for an improved method and articles for laying an easy to install and remove durable ceramic tile floor, and such improvements will hereinafter be discussed.

[0055] Referring to FIG. **2**, there is shown generally at **40** a tiled floor for withstanding heavier foot traffic. The floor substrate **21** includes a wood floor **22** to which backer boards **26** have been suitably bonded with the aforesaid latex-modified thinset mortar **24** and/or otherwise suitably attached similarly as described for the floor of FIG. **1**A. In order to achieve the desired stability underneath the ceramic tiles, sheets **42** (discussed hereinafter) are suitably bonded to the backer boards **26** with a suitable adhesive **44** (discussed hereinafter), and the ceramic tiles **30** are suitably bonded to the sheets **42** as hereinafter described and suitably grouted as illustrated at **34**.

[0056] Referring to FIG. **3**, there is shown generally at **50** a tiled floor wherein the floor substrate **52** is concrete or other suitably rigid substrate not requiring backer boards for strengthening thereof. The sheets **42** are accordingly bonded with the adhesive **44** directly to the concrete floor substrate **52** to thereby provide the desired stability underneath the ceramic tiles. Otherwise, the tiled floor **50** is similar to the tiled floor **40**.

[0057] In order to allow easy and quick removal of the ceramic tiles **30**, the sheet **42** is composed of paper or other suitable material which, while affording the desired stability under normal conditions of floor use, can tear apart or separate thus allowing the "peeling" of the ceramic tiles **30** from the floor substrate when it is desired to remove the ceramic tiles **30**. The sheet **42** may, if desired, be pre-perforated or perforated (slitted) at the time of application at spaced locations (for example, every 9 to 12 inches) to allow accelerated curing time and/or easier removal of the tile **30**.

[0058] Referring to FIG. **6**, a preferred sheet **42** is sheet **42***a* which comprises a plurality of layers **46** of paper bonded together so that the layers **46** will separate one from another for removal of the ceramic tiles **30** from the floor substrate. An example of a suitable sheet **42***a* is Fiberock floor protection paper, which is a 12-point quality paper board marketed by United States Gypsum Company (USG) of Chicago, Ill. This paper, which has 7 layers **46** and a thickness of about 1/32 inch or less and with water resistance integral in all layers, is made in a wet slurry process formed by heat and pressure using a conventional paper rolling process that bonds the layers together. This paper, which is sold in 3 feet by 167 feet rolls, has conventionally been used for taping to a brand new floor (tile or wood) to protect it from damage while a home is being sold. It has a white side and a brown side. The white side should desirably face downward and is bonded to the floor substrate with the adhesive **44**, which may be a suitable permanent adhesive. The brown side should desirably face upward since it has been found to appear to better receive the thinset mortar. Alternatively, when applied to backer board, it may be desired that the brown side face downwardly so as to provide better adherence between the paper and the backer board when the paper and backer board are assembled together for sale as a unit, it being found that the brown side appears to provide better adherence. The bonding of the paper layers **46** is desirably weaker than the bonding of the sheet to the floor substrate and to the ceramic tiles **30**. Accordingly, when the ceramic tiles **30** are removed, the paper **42***a* separates such that some layers **46** remain with the floor substrate and others of the layers **46** remain with the ceramic tiles **30**. Advantageously, it is then only necessary to make minor repairs to the backer board, wood, or concrete substrate, patch, and sand slightly in order to prepare the substrate to accept new tile.

[0059] Referring to FIG. **7**, another suitable sheet **42** is a paper **42***b* (such as, for example, Polykraft paper) which is a coating **54** (about 0.0005 mil) of polyethylene film adhesively bonded or heat laminated to a single layer **56** (or multiple layers) of suitable paper (for example, 50# Kraft paper, supplied by various suppliers including Chudy Paper of Buffalo, N.Y.). The Polykraft paper is believed to be water resistant. The sheet **42***b* may have a thickness of, for example, about 1/32 inch or less. Its polyethylene side **54** faces the ceramic tile **30** because polyethylene bonds well to thin-set mortar, and its paper side **56** is bonded to the floor substrate with the adhesive **44**, which may be a suitable permanent adhesive. For easy removal of the ceramic tile **30**, the adhesive laminating the polyethylene to the paper is desirably weaker than the bonding of the sheet **42** to the floor substrate and to the ceramic tiles **30**, whereby the polyethylene coating may advantageously separate from the Kraft paper. Alternatively, the paper side **56** may face the ceramic tile **30**, and the polyethylene side **54** may be bonded to the floor substrate with the adhesive **44**, which may be a suitable releasable adhesive or alternatively a very small amount (an amount which is enough to allow the desired sticking to the substrate but which is not so much as to prevent peeling from the substrate, i.e., so as to require, for example, only about 40 oz. of force to peel the sheet from the substrate while allowing the desired sticking to the substrate) of permanent acrylic adhesive, whereby the sheet **42***b* may be advantageously peeled from the floor substrate. Either way, advantageously, it should then only be necessary to make minor repairs to the substrate, patch, and

sand slightly in order to prepare the substrate to accept new tile. Polykraft paper is sold in widths of about 3 feet and lengths of about 600 feet.

[0060] Another suitable sheet **42** is the above discussed Polykraft paper and a releasable adhesive, such as Taylor's 2027 adhesive marketed by W. F. Taylor Co., Inc. of Dalton, Ga., is used to apply the paper to the substrate, whereby the laid ceramic tile **30** may be easily removed by peeling the paper from the substrate. The sheets of Polykraft paper should be laid into the adhesive with the shiny polyethylene side down.

[0061] Another suitable sheet **42** is the previously discussed 6 feet wide membrane known as an Underfloor membrane marketed by Congoleum of Mercerville, N.J. and which comprises a combination of fibrous felt and pvc (polyvinylchloride) vinyl. Another suitable sheet is the previously discussed **6** feet wide membrane known as a mul membrane ("mul" is also a fibrous felt and pvc vinyl combination) which is marketed by Mannington of Salem, N.J.

[0062] In order to lay the ceramic tiled floor, with the substrate surface clean and dry and the temperature at 65 degrees F. or greater, the sheet **42** is suitably adhesively applied to the floor substrate, using a permanent or releasable adhesive **44**. For application of the aforesaid Polykraft paper, use a 1/32 inch by 1/32 inch square notch trowel to spread out the Taylor's 2027 adhesive, then use a fan to dry the adhesive (usually takes 20 to 30 minutes, the adhesive will change from a creamy color to a clear transparent state; if you touch it with your finger tips and it transfers to your fingers, it is not dry). Alternatively, NuSpray Lock spray adhesive, marketed by The Mohawk Group of Marietta, Ga., may be used. For application of sheets **42***a* and **42***b*, use a 1/16 inch square notch trowel to spread a multipurpose flooring adhesive such as Apac's #240, let the moisture wick off by letting the adhesive stand for about 10 minutes. After the respective adhesive is dry, roll out the respective sheet (**42***a* or **42***b* or Polykraft) into the adhesive with the appropriate side (as previously discussed) up. Use a flat trowel to press the sheet into the adhesive while pressing out all air bubbles to the sides. Be sure edges of seams are flat, and do not let the seams of the sheets fall directly over any seams of the backer boards or other substrate seams. A knife may be used to puncture any air bubbles that won't come out. The sheets **42***a* and **42***b* should stand for about 10 minutes before setting tile, but the tile may be set immediately after the Polykraft paper has been set in place. A primer coat of suitable adhesive **48** may then be applied to the sheet **42** so that the sheet **42**, if non-porous, may accept the bondant **58**. If the sheet **42** is porous, then it may not be necessary to apply the primer adhesive **48**. After the primer adhesive **48** has dried (or if no primer adhesive is applied due to the sheet **42** being sufficiently porous to accept the bondant **58**), then the ceramic tiles **30** may be bonded to the sheet **42** by applying the bondant **58**, which is desirably a thinset and latex add mix (latex modified thinset mortar) that is intended to bond tile to vinyl, such as the aforesaid Mapei's Kerabond or Keralastic mortar. The mortar should have suitable body or applied thickness to bond the ceramic tiles **30** in place. The ceramic tiles **30** are then suitably set into the mortar **58** suitably adjacent each other and allowed to set up, and, after waiting 48 hours, suitable grouting **34** is applied.

[0063] Referring to FIG. **4**, in accordance with the present invention, in order to make the installation of the ceramic tiles **30** easier, an article, illustrated generally at **60***a*, may be provided to a consumer in which the sheet **42** has been pre-applied with the adhesive **44** to a backer board **26**. Referring to FIG. **5**, an alternative article **60***b* comprises the sheet **42** pre-applied to the backer board **26** by bonding them together in a slurry state wherein the adhesive is not used. If the sheet **42** is non-porous, the primer adhesive **48** may also be pre-applied thereto (but is not required); otherwise, the primer adhesive may not be necessary. In order to install the ceramic tiles **30**, the customer may apply the backer board portion of the article **60** (either **60***a* or **60***b*) to the floor substrate **22** using the thinset mortar **24** similarly as previously discussed with respect to FIG. **2**, then the ceramic tiles **30** may be applied to the sheet portion of the article **60** (either **60***a* or **60***b*) using the thinset mortar **58** and, if necessary, the primer adhesive **48**, as also previously discussed. Thus, the customer is desirably spared the time-consuming step of applying the sheet **42** to the backer board **26** and may also be spared the time-consuming step of applying the primer adhesive.

[0064] Referring to FIG. **8**, in accordance with an alternative embodiment tiled floor **70** of the present invention, an adhesive tape **72** is suitably applied to the backer board **26**, and the ceramic tiles **30** are suitably bonded to the tape **72** using the thinset or other suitable mortar as previously discussed. Alternatively, as illustrated in FIG. **9**, the adhesive tape **72** may be applied to a hardwood floor **74**. As best seen in FIG. **10**, the tape **72** includes a strip **76** of suitable material to which has been pre-applied a suitable adhesive **78**. While the primer adhesive **48** may be pre-applied, it is preferred that the customer spray it on after the tape has been applied.

[0065] The tape strip **76** may be composed, for example, of polyethylene, which may have a thickness of, for example, 5 to 6 mils, or other suitable plastic material. Another suitable tape strip **76** is aluminum foil, which may have a thickness of, for example, 2 mils. The tape strip **76** may also be composed, for example, of rubber or synthetic rubber or other suitable material.

[0066] In order to not damage the hardwood floor **74** or other floor to which the adhesive tape **72** is applied and in order to allow easy and quick removal of the laid tiled floor, in accordance with the present invention, the adhesive **78** is a releasable or removable adhesive. Such adhesives are provided to form temporary bonds and, in preferred forms, can be removed after months or years without leaving other than perhaps a small amount of residue on the adherent. They are used in applications such as surface protection films, masking tapes, bookmark and note papers, price marking labels, promotional graphics materials, and skin contact (i.e, wound care dressings, EKG electrodes, athletic tape, etc.). Such adhesives have low adhesion and generally cannot support much weight, but they are considered to provide sufficient adhesion for providing the needed stability for the tiled floors of the present invention. Examples of releasable adhesives include the aforesaid Taylor's 2027 adhesive and Mannington's MT711 adhesive. The releasable adhesive **78** releases best from non-porous surfaces such as a urethane-finished wood or polyethylene-finished wood or other non-porous or high gloss hardwoods or substrate surfaces. Accordingly, a urethane or polyethylene or other high gloss finish should desirably be applied to a substrate before the tape **72** is applied thereto. As used herein and in the claims, a releasable adhesive is one which dis-adheres or releases from the adherent upon application of moderate or minimal peeling force to the tape and thus forms a non-permanent bond, and when a sheet is bonded to a substrate with a releasable adhesive, it is said to be "releasably adhered" to the substrate. In contrast, a contact

or self-stick adhesive (which may or may not be releasable) may be of a type which forms a permanent or non-removable bond and should therefore not be considered to be a releasable adhesive.

[0067] Suitable adhesive aluminum foil tape **72** may, for example, be a 2-mil thick aluminum foil tape, marketed by Walco Corporation of glenshaw, Pa., with acrylic adhesive having an adhesion strength to steel of about 40 ounces per inch so that the tape is releasable. Another suitable aluminum foil tape **72** may, for example, be aluminum foil tape #425 (ID # 70-0063-8599-4) marketed by 3M corporation and having a suitable releasable adhesive and provided in widths up to 40 inches, and typically used for heat protection around duct work.

[0068] The adhesive tape **72** should desirably be wide enough to make application efficient but not so wide that it is unwieldy. In accordance with the present invention, the adhesive tape **72** has a width, illustrated at **81** in FIG. **11**, which is at least about 22 inches, preferably between about 22 and 54 inches, for example, about 30 inches. While the length, illustrated at **82**, is not critical, the length **82** may, for example, be about 80 feet.

[0069] In order to form the ceramic tiled floor **70** or **80** using the releasable adhesive tape **72**, with the substrate surface clean and dry and with the temperature at 65 degrees F. or more, proceed to cover the substrate surface with the releasable adhesive tape **72**, taking care not to let the seams of the tape fall directly over any backer board or wood seams, but it is OK to overlap the edges of the tape. Although it is OK to lift and reposition the tape in order to remove bubbles, it is suitable to just puncture a bubble with a knife, and it is unnecessary to remove very tiny air bubbles. Too much lifting and repositioning of the tape may jeopardize the bonding quality of the adhesive. Use a very slightly damp rag or sponge to wipe off any dust or dirt, and use a wire brush to scuff up the surface of the tape while pushing out most of the remaining air bubbles and pressing the tape into the substrate more securely. The tape may then be immediately sprayed with the primer adhesive **48** (optional) and the adhesive allowed to dry. Then apply the thinset mortar and lay the ceramic tile **30** in place. Although a latex modified thinset mortar can be used, it is recommended that the mortar be the aforesaid thinset and latex add mix that is intended to bond tile to vinyl, such as Kerabond mortar and Keralastic latex add mix marketed by Mapei of Liverpool, N.Y. It is recommended to then wait 48 hours before grouting.

[0070] Referring to FIG. **12**, there is illustrated generally at **100** flooring in which the ceramic tiles **30** are applied to a hardwood floor **102**. A hardwood floor, if not already strong and rigid enough, may require the addition of a strengthening membrane in order to have sufficient strength or rigidity for the application of the ceramic tiles **30**. Yet the use of nails for applying backer board to a hardwood floor would damage the hardwood. In order to prevent such damage, in accordance with the present invention, the tape **72** is releasably bonded directly to the hardwood floor **102**, as previously discussed, and a suitable strengthening membrane **104** is suitably bonded to the tape **72** (to which the primer adhesive **48** is applied, if needed). A suitable membrane **104** may be Ditra matting marketed by Schluter Systems L.P. of Plattsburg, N.Y., and it may be bonded to the aluminum tape **72** with the thinset mortar **58**, which may, for example, be #254 mortar provided by Laticrete International Inc. of Bethany, Conn. or may be the aforesaid Mapei Kerabond mortar with Keralastic latex add mix. The ceramic tiles **30** are then suitably bonded to the membrane **104** with bondant **106**, which may, for example, be the Mapei Kerabond mortar with no add mix, and suitably grouted. In order to remove or replace the ceramic tiles **30** at a date months or years later, the tiles **30** along with the membrane **104** are stripped from the tape **72**. The tape **72** is then removed without leaving other than perhaps a small amount of residue, which is then removed. Since no nails or screws or mortar is used during installation of the ceramic tiles **30**, the hardwood floor **102** desirably need only be suitably sanded and refinished for use. If the hardwood floor is suitably strong and rigid enough, the ceramic tiles can of course be bonded directly to the aluminum foil.

[0071] Referring to FIG. **13**, there is illustrated generally at **110** heated flooring in which the ceramic tiles **30** are applied to any suitable floor substrate, illustrated generically at **112**. An electric heating system illustrated by wires **114** but which may be in any other suitable form such as matting is provided to underlie the ceramic tiles **30** for heating thereof. In order to increase the efficiency of the heating system **114**, in accordance with the present invention, the aluminum foil tape **72** is applied to the floor substrate **112** to underlie the heating system **114** so that the heat reflective qualities of the aluminum foil tape can prevent or reduce heat loss by preventing or reducing heat from being absorbed into the substrate **112**. While the heating system **114** is illustrated within the thinset mortar **58** (which may be latex-modified), it should be understood that it may otherwise be suitably installed within the ceramic tile flooring **110**. While the tape **72** for this purpose is described as aluminum tape, it should also be understood that it may be any other suitable tape having the desired heat reflective qualities and may be suitably applied to the substrate **112** otherwise than by the releasable adhesive **78**.

[0072] Referring to FIGS. **14** to **16**, there is illustrated generally at **200** a pre-fabricated article in accordance with another embodiment for application to a wood floor substrate or other suitable floor substrate, illustrated at **202** in FIG. **17**, to provide a surface **204** upon which the ceramic tiles **30** may be laid for later easy removability thereof when it is desired to replace the tiles.

[0073] The article **200** includes a backer board **26** which has a lower surface **210** for attachment to the floor substrate **202** and an upper surface **212** to which is adhesively attached a sheet **42** by means of a releasable adhesive **78**. The article **200** is pre-fabricated for sale to, for example, a floor installer or homeowner so as to ease and simplify the installation of the ceramic tiles particularly to a wood floor on-site.

[0074] The installation process involves applying the backer boards **26** edge-to-edge to the existing floor substrate **202** such as by use of the thinset mortar **24** or otherwise as is suitable. The thin-set mortar **58** (or other suitable bondant) is applied to sheets **42** and the ceramic tiles **30** applied edge-to-edge with suitable grouting **34** there between as previously discussed to bond the tiles **30** to the sheets **42**. As illustrated in FIG. **17**, the tiles **30** may be laid to overlap edges of the backer boards **42**.

[0075] The sheet **42** preferably comprises the previously discussed Polykraft paper, and the releasable adhesive **78** should desirably releasably bond its polyethylene non-porous side to the backer board **26** so as to allow its easier removal because a non-porous side should more easily release.

[0076] The sheet **42** and releasable adhesive **78** may alternatively comprise the aforesaid adhesive tape **72** including the strip **76** with the releasable adhesive **78** pre-applied (to a

suitable side of the sheet, for example, for Polycraft paper to either side but preferably to its non-porous side for release more easily, then a liner applied to protect it as it is rolled up) or applied during the manufacturing process of the article **200**.

[0077] The sheet **42** with the pre-applied releasable adhesive **78** may be used on any substrate.

[0078] It is important that little or none of the bondant **58**, which is not releasable, come into contact with the backer boards **26** since the bondant **58** in contact with the backer boards, if more than minimal contact, would make removal of the tiles **30** and sheets **42** difficult and may require repair to the backer boards. In order to avoid such contact, in accordance with the present invention, the sheet **42** covers the entirety of the upper surface **212** of the backer board **26**, as illustrated in FIGS. **14** to **17**. Thus, the edges **206** of the sheet **42** extend out to and are co-extensive with the respective edges **208** of the backer board **26** on all sides, whereby when the articles **200** are laid edge-to-edge, as illustrated in FIG. **17**, there is virtually no space for the bondant **58** to penetrate beyond the sheet **42** to come into contact with the backer board **26**. However, it should be understood that the respective edges need not be perfectly aligned and that there could be de minimus or insignificant gaps between respective edges or otherwise (distance which an edge **208** overlaps a corresponding edge **206** or even a void or slit in the sheet **42**) which could allow only an insignificant penetration of the bondant **58** to the backer board **26**, necessitating only insignificant repair, if any, of the backer board **26**. For example, a gap up to about ½ inch between respective edges **206** and **208** would be considered insignificant. For the purposes of this specification and the claims, the term "entirety" is defined so that the sheet **42** still covers the entirety of the upper surface **212** of the backer board **26** even though there is one or more such gaps which are in total de minimus and do not significantly affect the quality of the article **200**.

[0079] When it is desired to replace the ceramic tiles **30**, they and the sheet **42** may be easily "peeled" from the backer boards **26** which should then be in condition for applying new ceramic tiles in accordance with the discussion herein. For example, the adhesive tape **72** may be applied followed by bonding of the new tiles thereto as previously discussed. If desired, it is perceived that new articles **200** may be suitably applied to the old backer boards **26**.

[0080] Referring to FIG. **18**, there is illustrated generally at **300** flooring comprising ceramic tiles **30** applied to a floor substrate **302** in accordance with an alternative embodiment of the present invention. The floor substrate **302** may, for example, be a concrete or hardwood floor, as illustrated at **25** in FIG. **1**B, or a wood floor **22** to which strengthening backer boards **26** have been applied, as illustrated in FIG. **1**A. In accordance with the present invention, the ceramic tiles **30** are bonded (as hereafter discussed) to a suitable sheet or sheets **342** which may be vinyl tiles or vinyl sheets or sheets similar to any of the sheets **42**, including pvc, paper, etc. The sheet or sheets **342** are bonded to the floor substrate **302** with the releasable adhesive **78** so as to provide the desired stability (to prevent the sheets from shifting, sliding, or separating either before or after the ceramic tiles are bonded to the sheets) while allowing easy removability of the ceramic tiling for replacement with little or no damage to the floor substrate.

[0081] Desirably, a suitable amount of the releasable adhesive **78** is applied over the entire floor substrate **302**, and the sheets **342** are then laid into the adhesive **78**, thereby allowing the sheets to be releasably adhered to the substrate **302**. The releasable adhesive **78** is desirably applied to a thickness which is sufficient to provide the desired stability. For a non-porous sheet (referring to the side of the sheet that faces the adhesive), a thickness of 1/64 inch or less may be considered to be insufficient, while a thickness of about 1/32 inch or more is considered to be sufficient. For a porous sheet (again referring to the side of the sheet that faces the adhesive), a thickness of 1/64 inch or less may be considered to be sufficient, although a thickness of about 1/32 inch or more may be preferred. The releasable adhesive **78** is accordingly preferably applied with a trowel with a 1/32 inch notch to suitably achieve a thickness of about 1/32 inch. The releasable adhesive **78** should be thoroughly dry (for example, changes from a creamy to a clear color and does not transfer to the fingers on touch) before the sheets **342** are applied.

[0082] Alternatively, the releasable adhesive **78** may be pre-applied to the sheet **342**. Thus, the sheet **342** and the releasable adhesive **78** may constitute a tape, i.e, the adhesive tape **72** which, as necessary, may have a backer member, such as illustrated at **420** in FIG. **22**, which is removed before application of the adhesive tape **72** (sheet **342** and pre-applied releasable adhesive **78**) to the substrate **302**.

[0083] The latex modified thinset mortar **58** is preferably used to bond the ceramic tiles **30** to the sheets **342**. As an alternative, a polymer modified thinset mortar may be used, but it is not as strong. In order to achieve a strong bond particularly if the sheets **342** are non-porous, a scratch coating or primer adhesive **48** (not shown in FIG. **18**), which is a very thin coating created with a flat or non-teeth edge of a trowel, is first applied (if not already pre-applied by the sheet manufacturer), then allowed to dry for on the order of an hour to remove tackiness, then a layer of suitable thickness of the latex modified thinset mortar **58** (or if desired polymer modified thinset mortar) is applied. The mortar **58** should have suitable body or applied thickness to bond the ceramic tiles **30** in place. The ceramic tiles **30** are then suitably set into the mortar **58** suitably adjacent each other and allowed to set up, and, after waiting perhaps about 48 hours, the grouting **34** is applied.

[0084] When the mortar is applied in-situ during the tile installation process, the mortar must be allowed to dry so that the ceramic tiles can be stepped on before the grouting can occur. As discussed above, this undesirably requires waiting perhaps about 48 hours. Referring to FIGS. **19** to **22**, in order to provide easier installation at the job site as well as to allow immediate grouting upon laying of the ceramic tiles **30** (which may be any ceramic tile of a customer's choice), in accordance with the present invention, a composite article, illustrated generally at **400**, comprising a sheet **402**, which may be similar to any of sheets **28** and **42** and **342**, to which a ceramic tile **30** is bonded by bondant **58**, is prefabricated preferably off-site (i.e., at a manufacturing facility or other location which is not the location where the article is to be installed) and transported to the job site for installation. By "prefabricated" is meant that it is fabricated before it is installed on a floor. The installed articles **400** (prior to grouting) are illustrated in FIG. **21** and an alternative embodiment thereof at **430** in FIG. **22**.

[0085] A method of pre-fabrication of the composite article **400** is illustrated in FIG. **19**. Spaced ceramic tiles **30** are bonded with bondant **58** (including a scratch coating if needed, as discussed with reference to FIG. **18**, and which

may alternatively be a polymer modified thinset mortar) to a sheet **342**. The tiles **30** are spaced apart the desired distance to suitably allow for grouting therebetween.

[0086] After bonding of the ceramic tiles **30** has adequately occurred (for example, about 24 hours), the sheets **342** are then cut, as with knife **404**, as illustrated by dashed line **406** forming edges **408** (FIGS. **20** and **21**), between tiles **30** with the tiles remaining attached to the cut portions respectively of the sheet **342** to form the composite articles **400** each containing one or more (for example, three, as shown in FIG. **21**, for each of two articles **400**) ceramic tiles **30** bonded to the portions **402** respectively of sheet **342**. While the articles shown in FIG. **21** each comprises one row of 3 tiles, it should be understood that an article **400** may have any suitable arrangement of tiles, such as, for example, 2 rows of 4 tiles. Alternatively, the sheets **402** may be pre-cut to the desired size for a composite article **400**. Pre-grouting can be done but only in a space between a pair of tiles of the same composite article **400**. Thus, some grouting, i.e., in spaces where the composite articles **400** abut, will still have to be done after the composite articles **400** are laid.

[0087] It is important that grout not come into contact with the floor substrate **302** which would make removal of the ceramic tiles for replacement difficult and may cause damage to the floor substrate during such removal. In order to prevent such contact of the grout with the floor substrate, the composite articles **400** are formed with the overlapping sheet portions **410**, and they are laid at the installation site with the sheet portions **410** abutting to act as a barrier to the grout **34** contacting the floor substrate **302**, as seen in FIG. **20**, leaving space for the grouting **34** between a ceramic tile **30** of one article **400** and an adjacent ceramic tile **30** of an adjoining article **400**. It should be understood that there need not necessarily be an overlapping sheet portion for each article edge and that it is only necessary that, for a tile of one article and an adjacent tile of another article to be grouted there between, the total of overlap should equal the gap there between to be grouted. Thus, if one of the tiles has no overlapping sheet portion, then the sheet portion for the adjacent tile in the adjoining article should have an overlap equal to the total gap between the two tiles. After the grouting (if any is done at the fabrication site) has dried for at least 7 days or other suitable time, the composite articles **400** may be transported to the installation site and laid into the releasable adhesive **78** (after it has been applied and allowed to dry thoroughly) so that their sheet edges **408** abut. If no grouting is applied at the fabrication site, then the waiting period for grout drying is of course not required. Advantageously, once the articles **400** are laid, the grouting **34** (or remainder of the grouting) may immediately be applied between the ceramic tiles **30** and then allowed to dry.

[0088] Referring to FIG. **22**, an alternative composite article **430** may have a tile or plurality of tiles **30** pre-applied to a tape **72** comprising, as previously discussed, a sheet **28** or **42** or **342** or **402** and the releasable adhesive **78**, with a peelable backing strip or liner **420**, similarly as previously discussed with respect to FIGS. **19** to **21** for bonding the tiles **30** to the sheet **342**. It should be understood that it is within the scope of the present invention to apply the adhesive tape **72** to a sheet and to bond the sheet to the tiles. by suitably bonding to sheet **402** the previously described tape **72** having the releasable adhesive **78** adhered thereto. After removal of the backing strip **420**, the articles **430** are laid in position, with their sheet edges **408** abutting, so as to adhere to the substrate.

[0089] The grouting **34** is preferably a non-Portland cement grout, more preferably the previously discussed polyurethane grouting to provide the flexibility to cushion the ceramic tiles **30** against cracking from shifting and shock loads received by the floor **302**. Alternative grouts **34** are acrylic and epoxy and could be a Portland cement grout. Polyurethane grouting is stronger and also desirably provides better stain resistance than acrylic grouting and is also color consistent. Epoxy grouting has the desired strength but is less flexible than polyurethane grouting with the result that cracking is more likely to occur with epoxy grouting. Such polyurethane grouting is available from Starquartz Industries, Inc. of Baltimore, Md.

[0090] The composite articles **400** and **430** are provided to allow the installation of ceramic tiles of the customer's choosing and to desirably greatly reduce the time needed for installation at the installation site. Advantageously, grouting may be conducted immediately after laying the composite articles (rather than having to wait 48 hours for thinset mortar to dry). It is also considered advantageous for a worker to be able to spread thinset and set the tile while standing at a table rather than having to kneel on the floor for 8 hours a day, saving wear and tear on his or her knees and back. The releasable adhesive **78** is used to desirably afford the necessary stability to the laid tiles and desirably allows the tile to be easily and quickly removed for replacement without appreciable damage to the floor substrate.

[0091] With use of the tape **72** (combination as previously discussed of the sheet **342** with the releasable adhesive **78** pre-applied), which may be called a tile releasing membrane, the installation process, which can be easily done by a homeowner, is provided to be easy and inexpensive and provide what might be called performance without permanency. See Applicant's website www.nuetile.com. Thus, referring again to FIG. **18**, the backing strip **420** (illustrated in FIG. **22**) is removed to expose the releasable adhesive **78**, and the tile releasing membrane **72** laid onto the cleaned and prepared substrate **302**, whether backerboard or concrete, then the tile installed directly over the tile releasing membrane with the thinset mortar and grouted. The placement of the tile releasing membrane **72** may be adjusted one time if needed. The tile releasing membranes **72** are provided to greatly reduce the time, effort, and mess otherwise associated with removing ceramic tile. The tiles may very often come up in one piece, allowing for easy repair of cracked tiles. Little or no damage may be done to the substrate **302**, so as soon as the removal process is complete, simply clean and prepare the substrate and reapply the tile releasing membrane and install the tile. The process is provided to be so easy and inexpensive that one is no longer stuck with one fashion for decades, and now one can have the peace of mind that ceramic tile offers his or her home for as long as he or she chooses to keep it.

[0092] Alternatively, the prefabricated articles **400** or **430** may be quickly and easily applied to the substrate **302**.

[0093] There you have it—ceramic tile performance without permanency, easily and inexpensive.

[0094] It should be understood that, while the present invention has been described in detail herein, the invention can be embodied otherwise without departing from the principles thereof, and such other embodiments are meant to come within the scope of the present invention as defined by the appended claims.

What is claimed is:

1. A method of laying a ceramic tile floor comprising the steps of (a) releasably adhering a sheet to a floor substrate, and (b) bonding at least one ceramic tile to the sheet.

2. A method according to claim **1** wherein the step of releasably adhering the sheet comprises applying to the floor substrate adhesive tape comprising the sheet and a releasable adhesive.

3. A method according to claim **1** wherein the step of releasably adhering the sheet comprises applying to the floor substrate adhesive aluminum tape comprising the sheet composed of aluminum and a releasable adhesive.

4. A method according to claim **1** wherein the sheet has a width which is at least about 22 inches.

5. A method according to claim **1** wherein the step of bonding the ceramic tile to the sheet includes applying a latex modified thinset mortar to the sheet and laying the ceramic tile in the thinset mortar.

6. An article for applying to a floor substrate along with others of the article for laying a ceramic tile floor, the article comprising a prefabricated combination of a sheet and at least one ceramic tile bonded to said sheet.

7. An article according to claim **6** wherein the prefabricated combination includes a releasable adhesive applied to said sheet for bonding said sheet to a floor substrate.

8. An article according to claim **6** wherein said sheet is composed of aluminum.

9. An article according to claim **6** further comprising means for laying the articles with said sheets thereof edge-to-edge and with a gap between a tile on one of the article and an adjacent said tile on an adjoining one of the article.

10. An article according to claim **6** further comprising means for preventing grout applied between an edge of said at least one tile of one of the article and an edge of said at least one tile of an other of the article from contacting the floor substrate.

11. An article according to claim **6** comprising at least two of said at least one tile bonded to said sheet, the article further comprising grout between said at least two tiles.

12. An article according to claim **11** wherein said grout is a urethane grout.

13. An article according to claim **6** comprising a latex modified thinset mortar bonding said at least one tile to said sheet.

14. An article according to claim **6** wherein the article is laid with others of the article on a floor substrate with said sheets of adjoining ones of the articles abutting thereby forming a floor, a releasable adhesive bonding said sheets to said floor substrate, and grout between adjacent ones of said tile.

15. An article according to claim **14** wherein said grout is a urethane grout.

16. A method for laying a ceramic tile floor comprising providing a plurality of articles each including a sheet and at least one ceramic tile bonded to the sheet and releasably adhering the sheets of the articles to a floor substrate

17. A method according to claim **16** wherein each of the articles is further provided to include a releasable adhesive on the sheet thereof for effecting the releasably adhering of the sheets to a floor substrate.

18. A method according to claim **16** further comprising laying the articles so that edges of the sheets of adjacent ones of the articles abut.

19. A method according to claim **16** further comprising applying grout between adjacent ones of the tiles including applying the grout between a ceramic tile of one of the articles and a ceramic tile of another of the articles which is adjacent thereto.

20. A method according to claim **19** further comprising selecting the grout to be urethane grout.

* * * * *